Specifications & Dimensions

Supply Water Pressure Min. - Max.	30 - 100 psi (207 - 689 kPa)
Supply Water Temperature Min. - Max.	40 - 100 °F (4 - 38 °C)
Rated Service Flow	2.0 gallons per minute (7.57 liters per minute)
Inlet - Outlet	3/8" quick connect fittings and tubing included

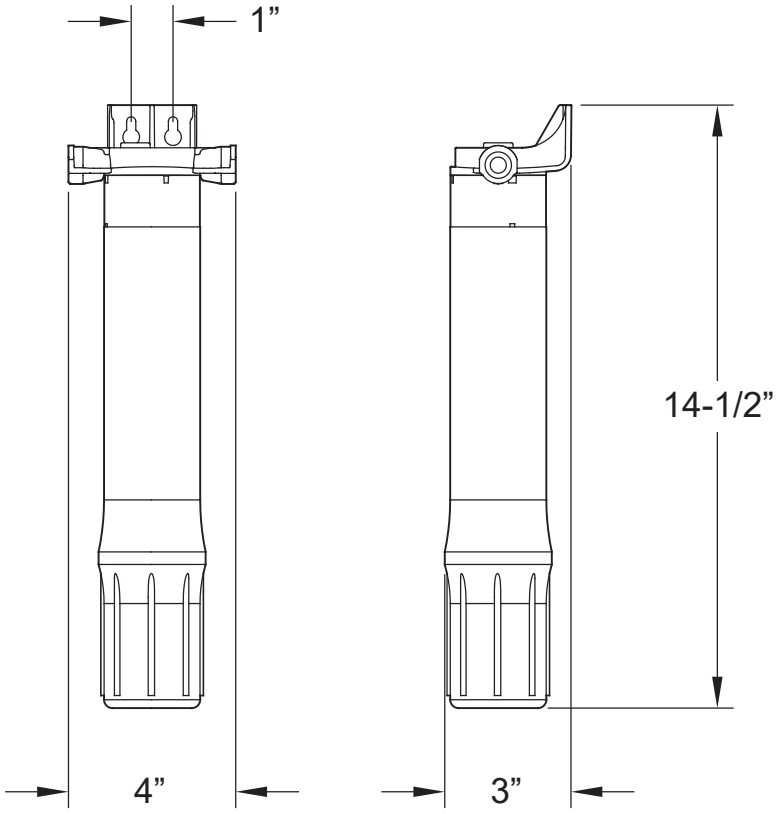

FIG. 1

Questions? Call Toll Free 1-800-693-1138 Monday- Friday, 7 AM - 6 PM CST
or visit www.ecopure.com (U.S.A.) **www.ecopure.ca** (Canada)

When you call, please be prepared to provide the model number and date code, found on the filter head.