November, 2022

PAL5675
KITCHEN ISLAND

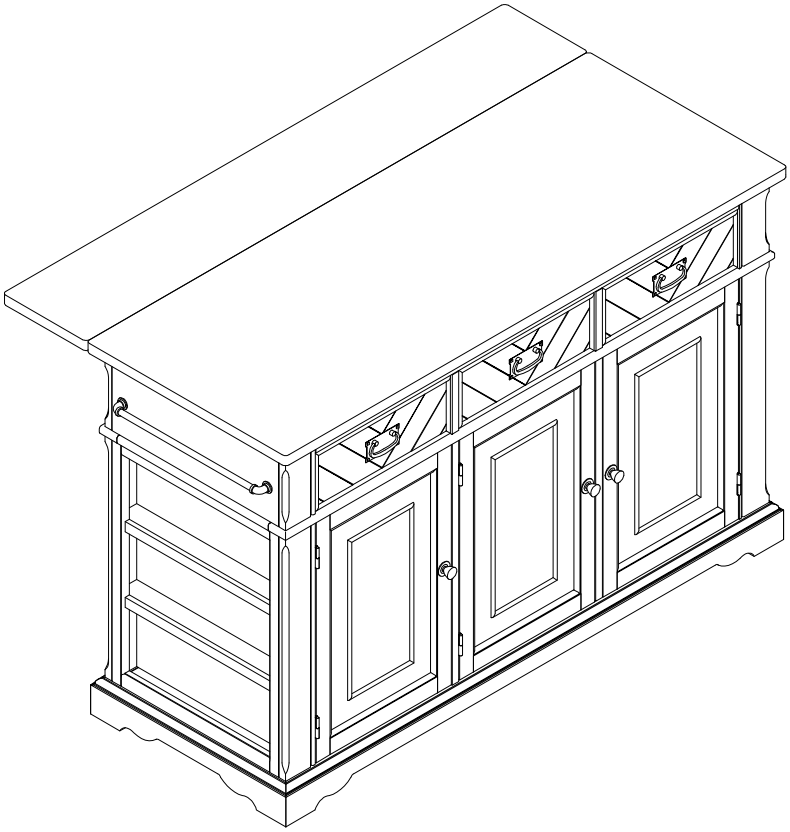

Assembly Instructions - Important:
Carefully unpack and identify each component before attempting to assemble. Refer to parts list. Please take care when assembling the unit and always set the parts on a clean, soft surface. If you require any assistance with assembly, parts or information on other products, please visit our website: www.officestar.net or call or write us.

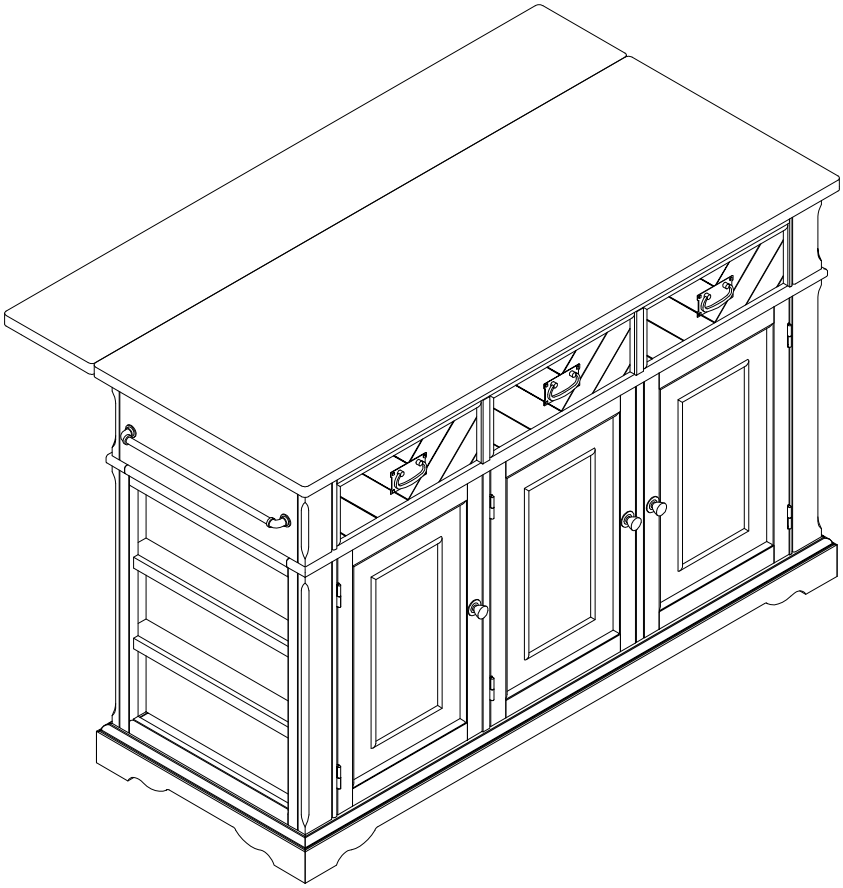

1. Do not use this product unless all screws and bolts are securely tightened.
2. Check that all screws and bolts are tight every three months or as needed.
3. Dispose of packing material properly. Do not use plastic cover as head covering. It may cause suffocation.
4. Do not use this product as a stepladder.
5. Use this product for its intended purpose only.
6. FOR INDOOR RESIDENTIAL USE ONLY.

LIMITED WARRANTY

OSP Home Furnishings® warrants to the original purchaser that this product will be free from defects in material and workmanship as described below. Home Furnishings® will repair or replace, at its option, without charge to the original purchaser only, defective products or parts for one (1) year from the date of purchase. Replacement parts can only be supplied if parts are available. Items out of production may be unavailable. This warranty shall be effective for the applicable time period beginning from the date of purchase as shown on your original sales receipt. This warranty is your sole remedy for product defects and excludes defects due to or arising in connection with product abuseor misuse, use modification of, or attachments to the product, and products or parts not used, maintained, or installed in accordance with the company's installation, maintenance and/or applicable guidelines. There are no other warranties, express or implied, other than those specifically described, including without limitation any implied warranty of merchantability or of fitness for a particular purpose. OSP Home Furnishings® will not be responsible for incidental or consequential damages. Some states do not allow the exclusion or limitation of incidentalor consequential damages, so the above limitations or exclusions may not apply to you. This warranty gives you specific legal rights and you may also have other rights which may vary from state to state. Our quality standards are among the highest in the industry. Sometimes, nomatter how hard we try, there are times when parts are damaged or missing. Our Parts Department will do everything possible to promptly remedy the problem. Contact us via e-mail parts.department@officestar.net by Fax 1-909-930-5629, or toll free parts number 1-800-950-7262, Monday through Friday 8:00 a.m. - 3:30 p.m. Pacific Time. To make a warranty claim, contact Parts Department. Provide model number, proof of purchase, description of the problem and obtain return authorization. At its option OSP Home Furnishings® will: (a) Supply compatible components of current manufacture. (b) Repair the customer's component. The customer must prepay freight on any components returned to the factory. Return freight on components still in warranty will be paid by OSP Home Furnishings®.

PARTS

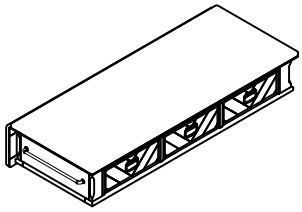

(A) Top (1 PC)

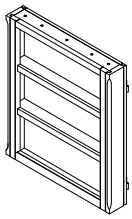

(B) Side Frame Left (1 PC)

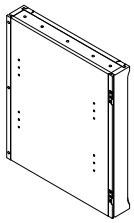

(C) Side Frame Right (1 PC)

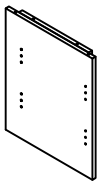

(D) Middle Panel (1 PC)

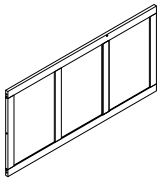

(E) Back Frame (1 PC)

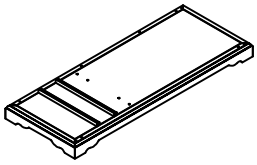

(F) Bottom Frame (1 PC)

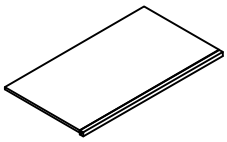

(G) Shelf Panel (2 PCS)

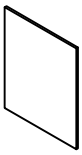

(H) Divider (2 PCS)

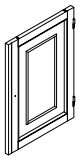

(K) Door Right (1 PC)

(L) Door Left (2 PCS)

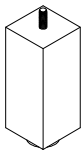

(M) Support Leg (1 PC)

HARDWARE LIST

NO	DRAWING	DESCRIPTION	SIZE	QUANTITY
1		Bolt	1/4” x 35mm	15 PCS
2		Spring Washer	1/4"x12mm	15 PCS
3		Flat Washer	1/4" x16mm	15 PCS
4		Wood Dowel	Ø8 x 30mm	20 PCS
5		Door Knob		3 PCS
6		Screw	5/32" x 25mm	3 PCS
7		Shelf Pin		8 PCS
8		Allen Wrench	4 x 57mm	1 PC
9		Allen Wrench	4 x 57mm	1 PC

PHILLIPS SCREW DRIVER (NOT PROVIDED)

STEP 1

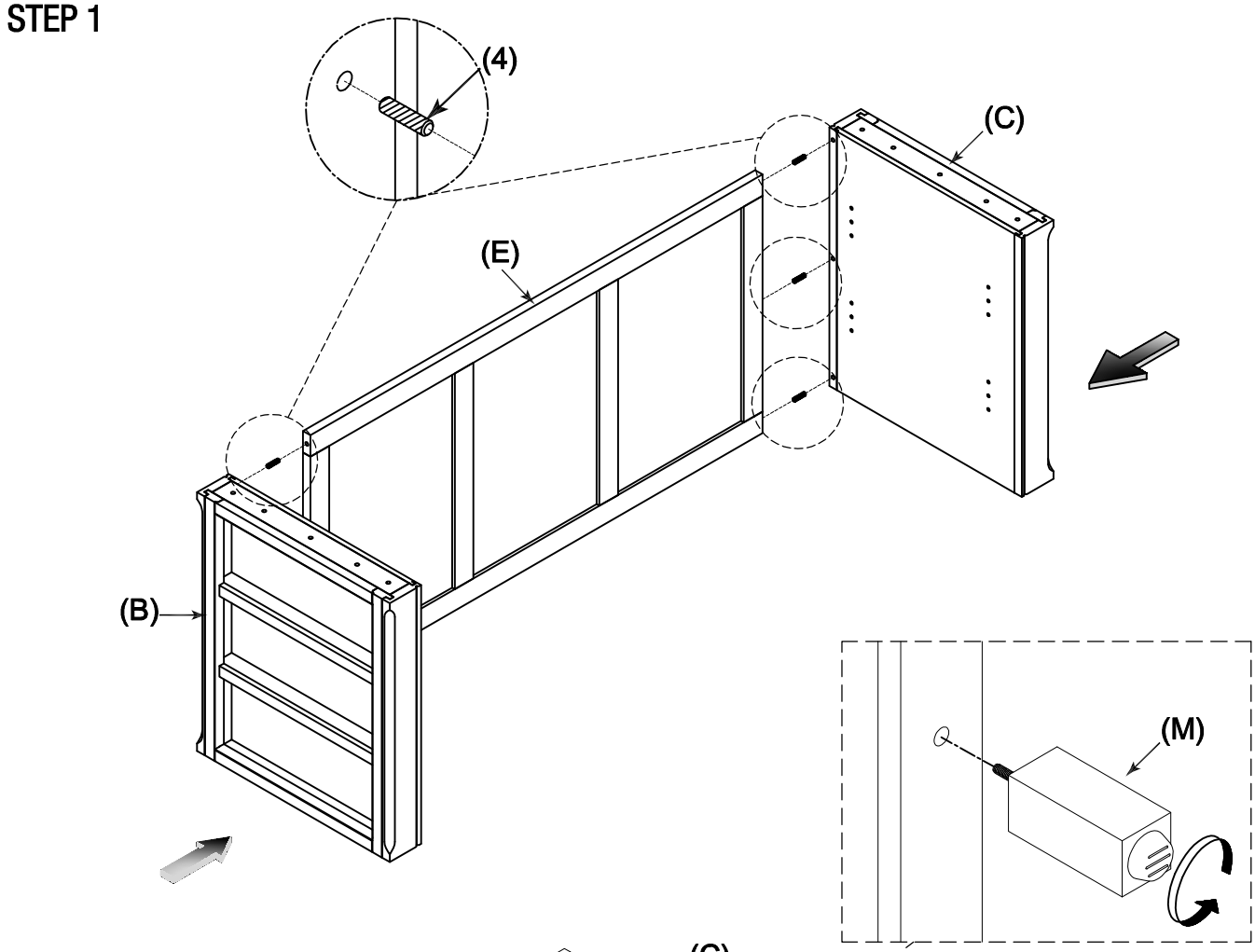

STEP 2

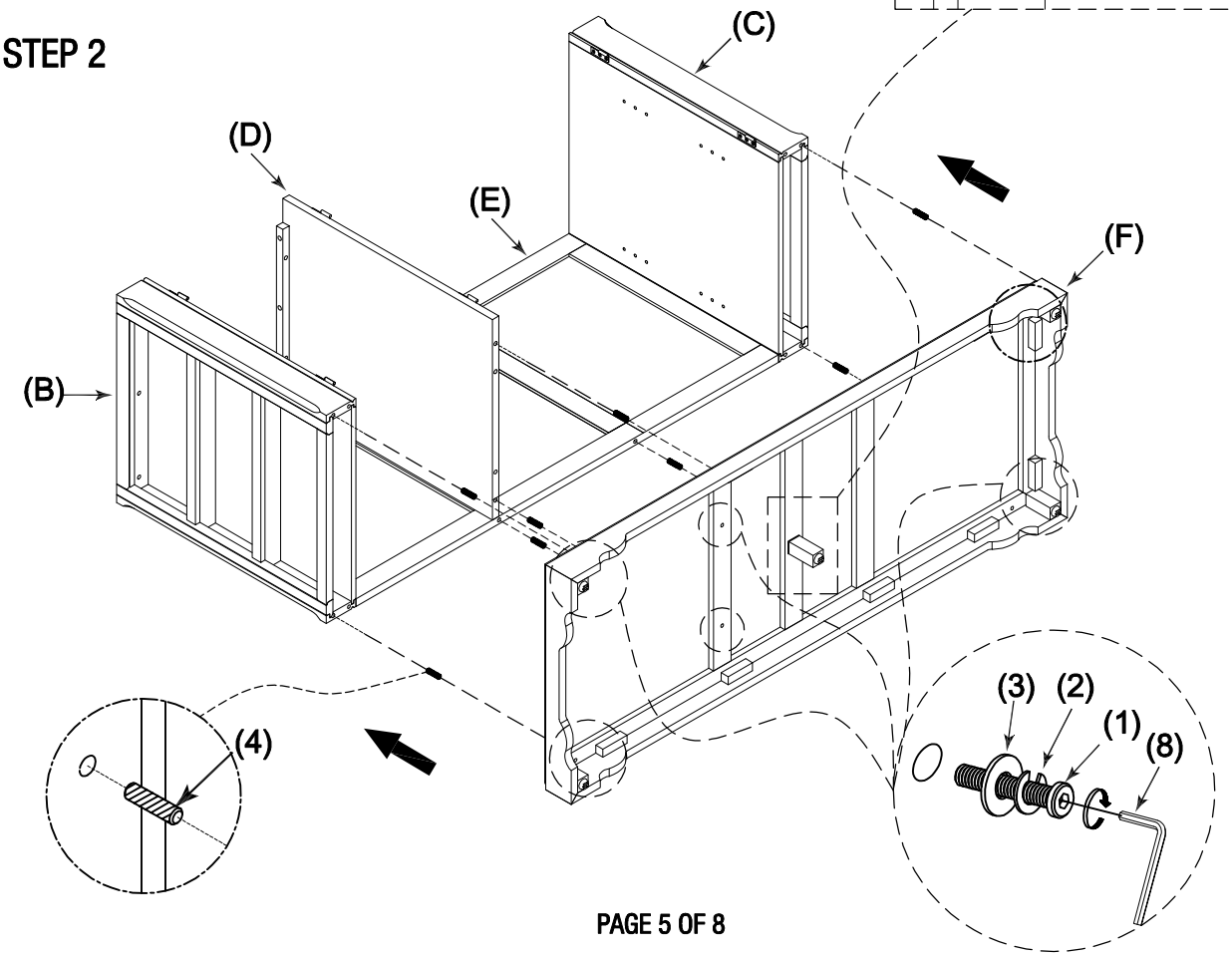

STEP 3

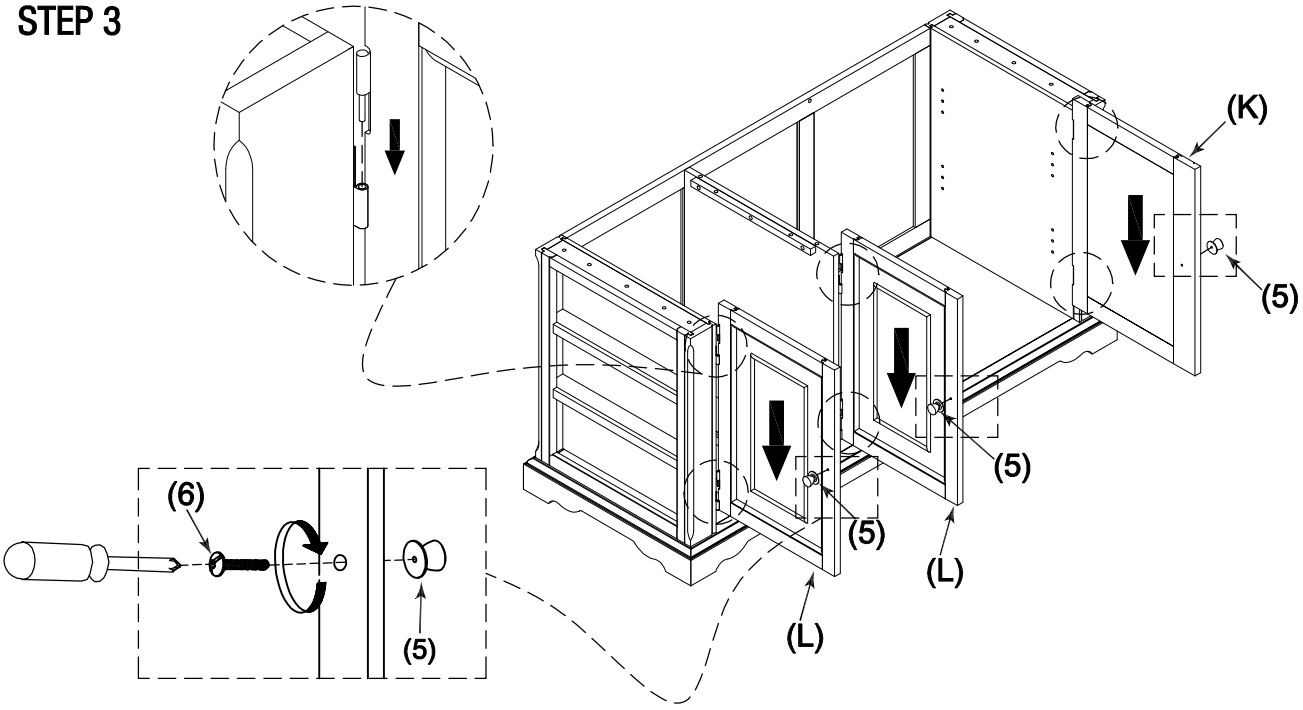

Tool Required: Phillips Screw Driver
(not provided)

STEP 4

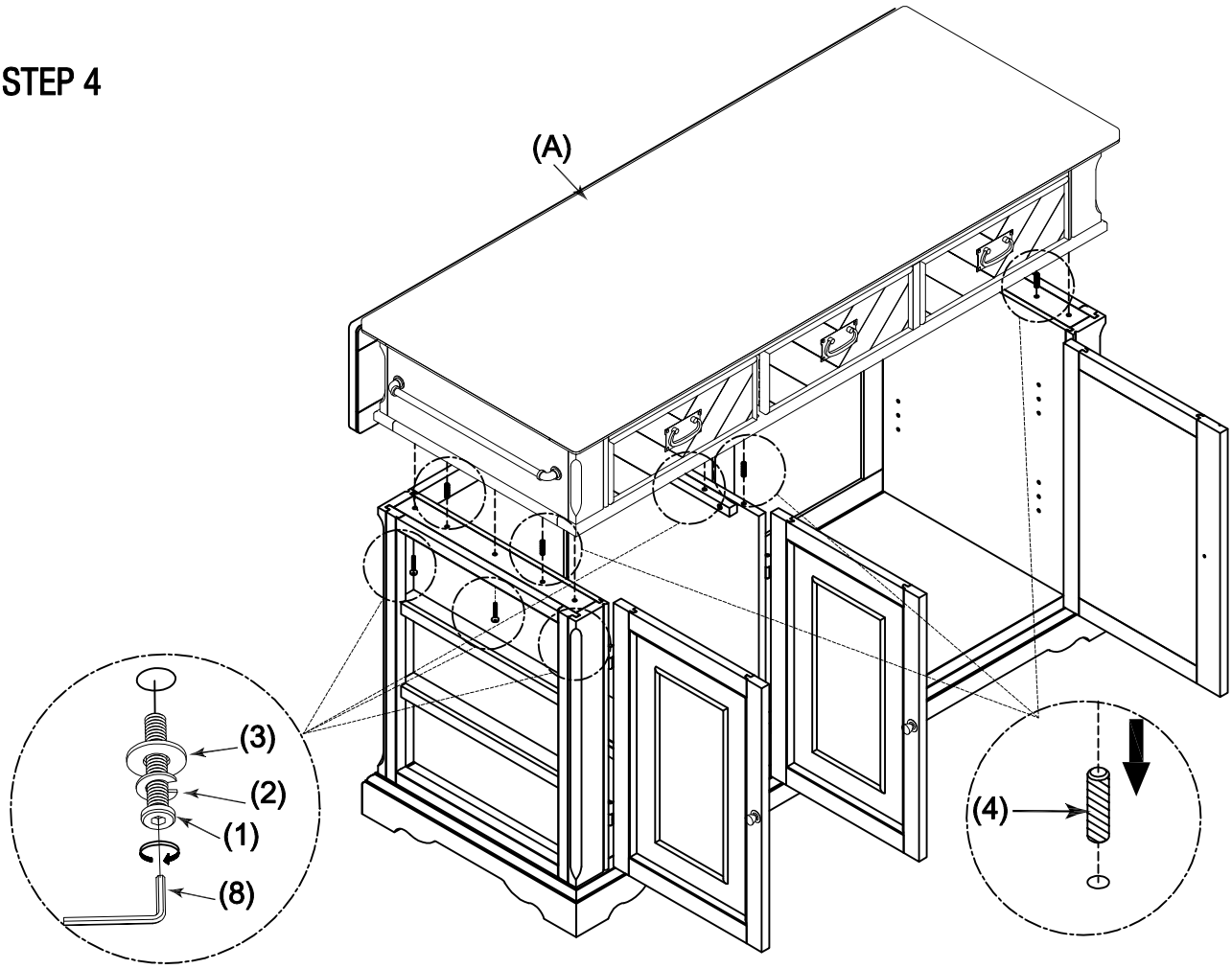

STEP 5

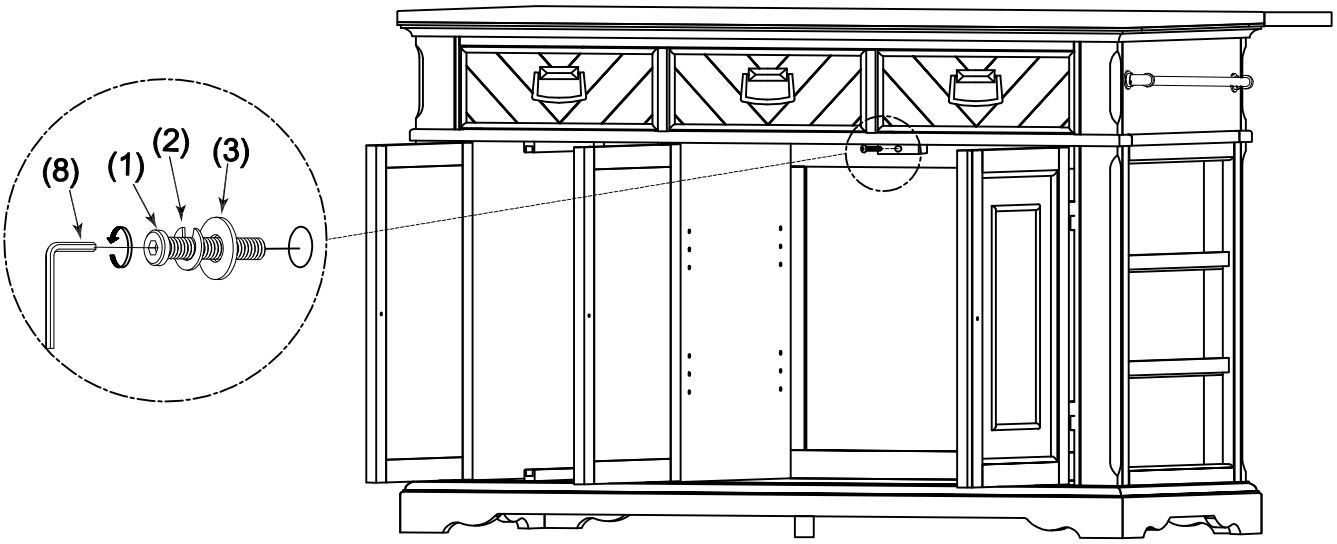

STEP 6

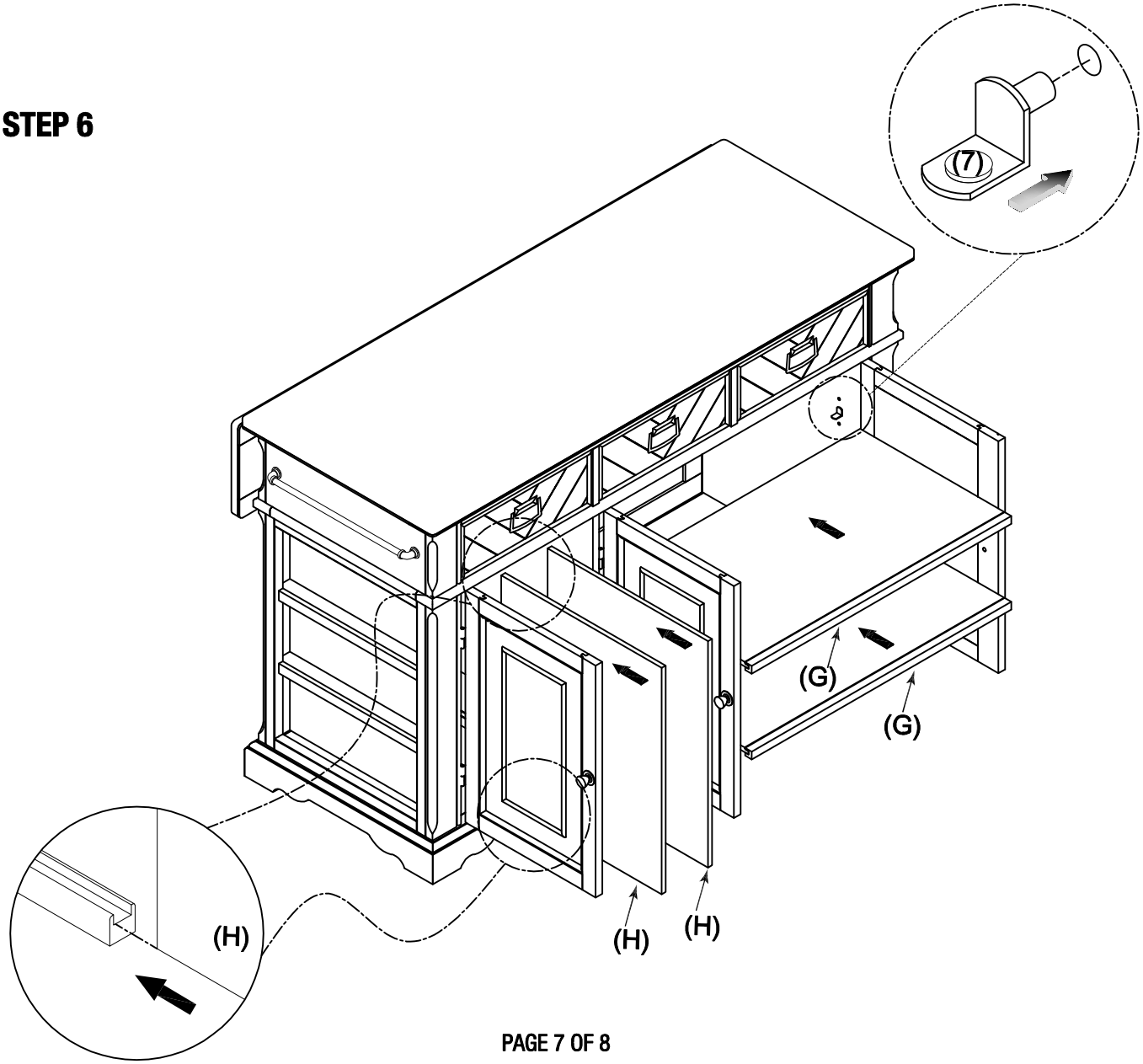

STEP 7

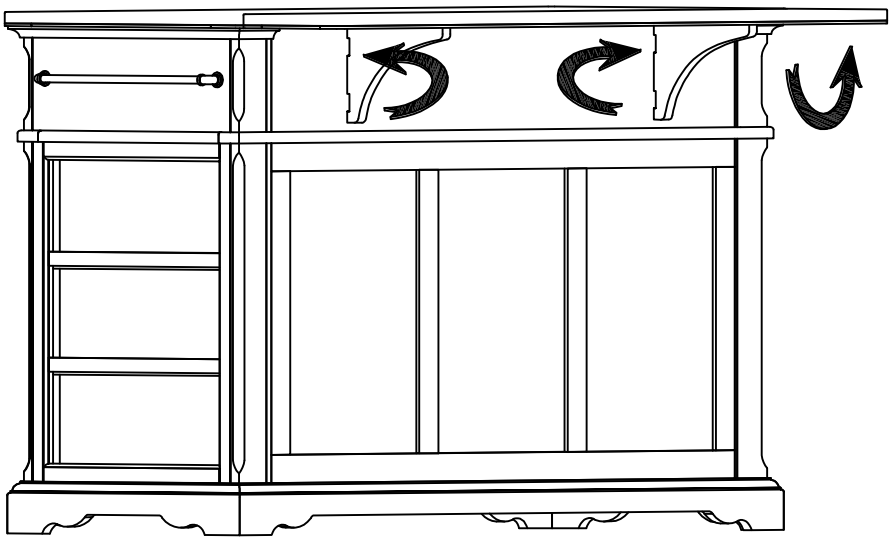

STEP 8

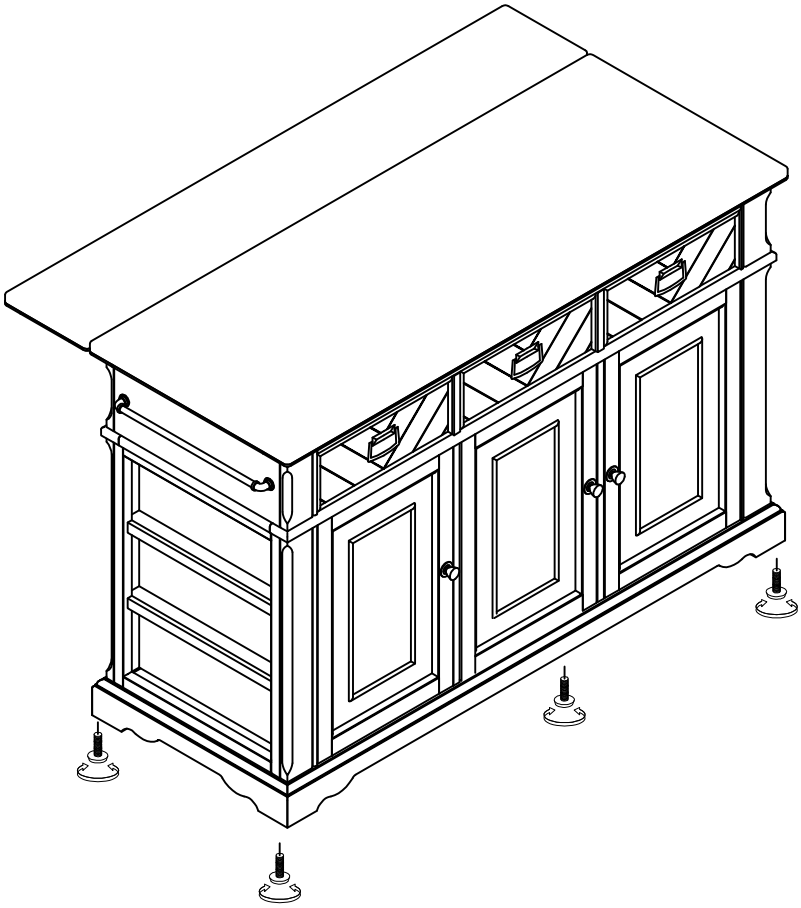

COMPLETE