Best Master Furniture
The Imported Furniture Specialist

THE BEST MASTER

ITEM: F400 COUNTER HEIGHT TABLE

PARTS LIST

No.	Description	Image	Qty
P1	Table top		1
P2	Top shelf		1
P3	Bottom shelf		1
P4	Support bar		2
P5	Table Legs		4

HARDWARE LIST

No.	Description	Image	Qty
H1	Long bolt Ø1/4"x60mm		8
H2	Medium bolt Ø1/4"x50mm		4
H3	Spring washer Ø5/16"x13mm		12
H4	Flat washer Ø5/16"x19mm		12
H5	Allen key		1
H6	Screw Ø1/6"x30 mm		16
H7	Wooden Pegs Ø2/5"x20 mm		2
H8	Screw driver		Not provided

STEP 1

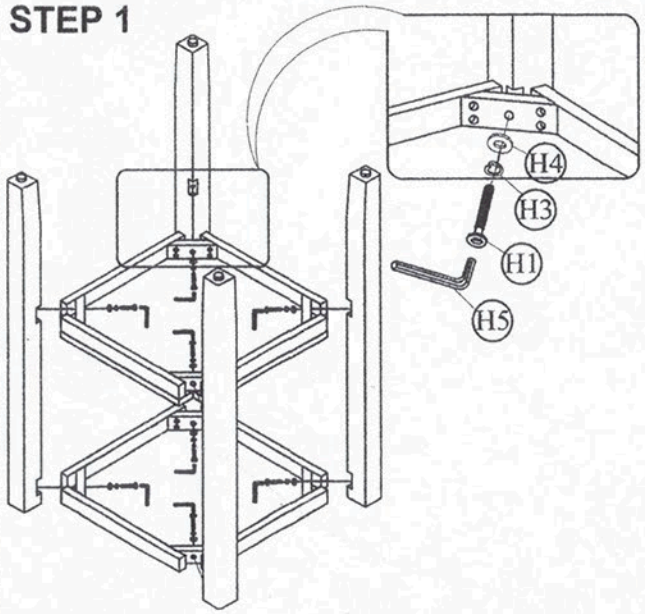

STEP 2

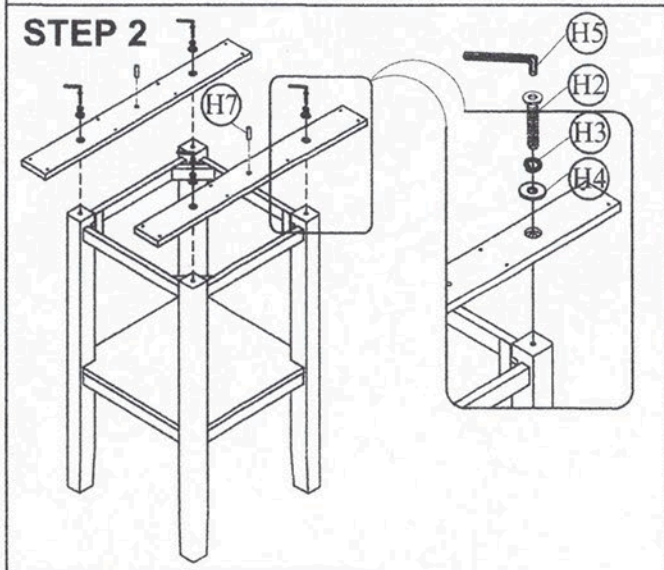

STEP 3

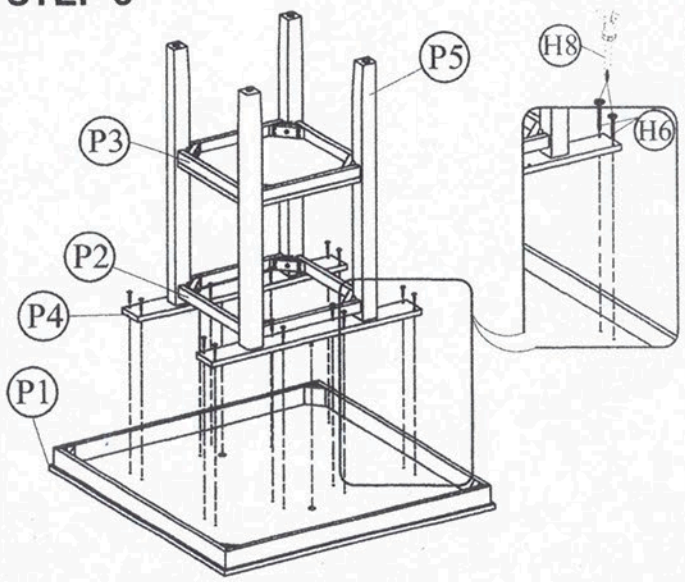

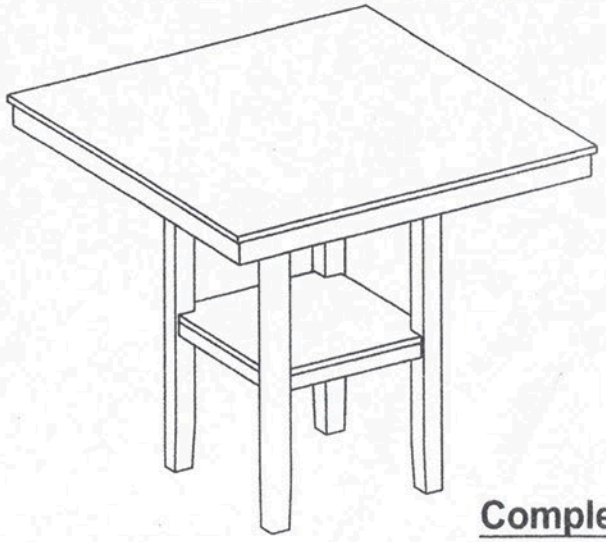

Complete