SIMPLIHOME®
LIFE BY DESIGN

Wyndenhall™ HOME DECOR
brooklyn + max™

ARTISAN / HOLDEN / STRATFORD

72 INCH WIDE TV MEDIA STAND

MODEL # AXCART72-TB

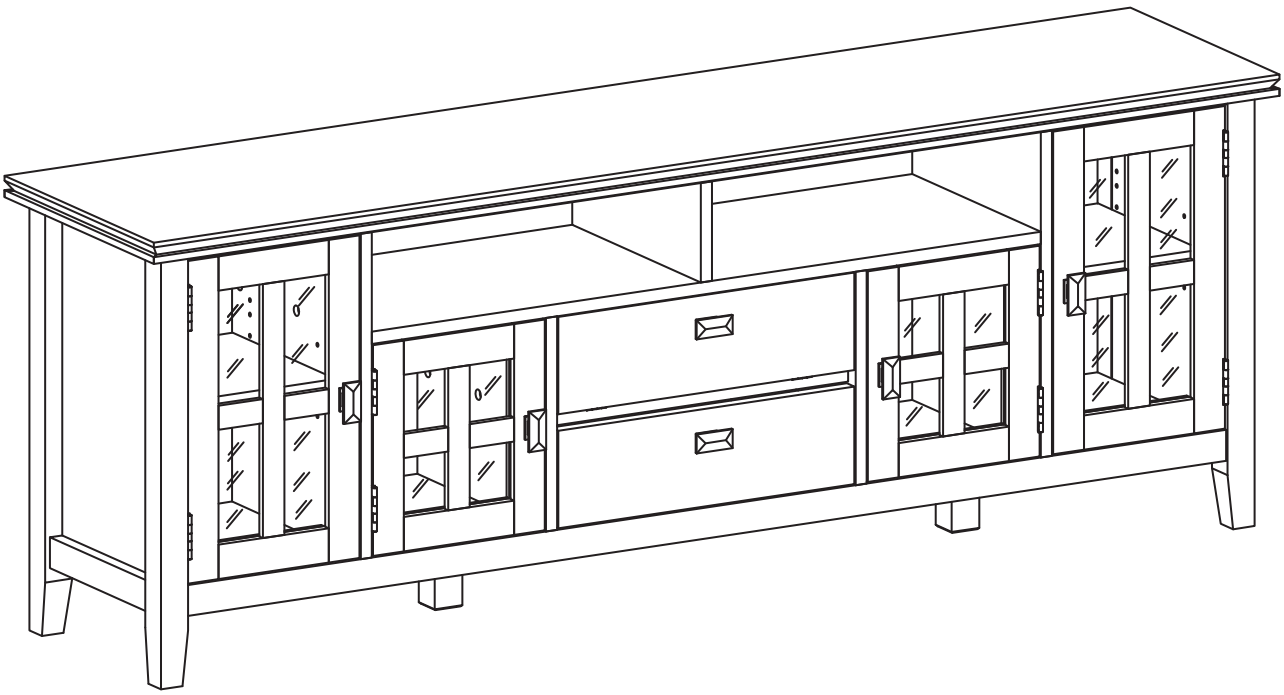

SIMPLI HOME
LIFE BY DESIGN

Wyndenhall HOME DECOR
brooklyn + max

Questions, problems, assembly help, missing parts?

No need to return the product, we will gladly help and ship your replacement parts free of charge
Please call Customer Service at 1-866-518-0120 ext. 262
Monday to Friday between 9 am – 4 pm EST
or go to
www.simpli-home.com/parts request

In order to assist you in a timely manner, please have the following information ready:

Model # _____ Part Number or Letter_____

Purchased at _____Date of Purchase _____

If you wish to return the product, please contact the retailer where the product was purchased.

IMPORTANT : Please read this manual carefully before beginning assembly of this product. Keep this manual for future reference.

SAFETY INFORMATION

CAUTION: Injuries and damage can occur from furniture tip over if product is not properly anchored to the wall. Use the Furniture Anti-Tipping Restraint provided with the product. Consult our assembly instructions for help.
If the Furniture Anti-Tipping Restraint kit is not in the box, please contact our customer service department in order to obtain another kit before using the furniture.

Identify all the parts and hardware. Do not discard of the packaging until you have checked that you have all of the parts and hardware required. Hardware package may have spare parts.

WARNING: This item contains small parts which can be swallowed by children and pets. Keep children and pets away during assembly. To avoid danger of suffocation, always keep plastic bags away from children and pets. We recommend that you assemble this unit on a carpeted floor to avoid scratches. If using power tools, set the tool to low torque to avoid damage.

May require 2 people for ease of assembly.

IMPORTANT : Please read this manual carefully before beginning assembly of this product. Keep this manual for future reference.

CARE and MAINTENANCE

Perhaps the greatest environmental damage to wood furniture comes from wide swings in relative humidity (RH) in our homes. Wood absorbs and desorbs water as relative humidity rises and falls, and in doing so it swells and shrinks. Making matters worse, it expands and contracts unequally along different grain directions. As humidity changes, the components of wooden objects are continually pushing and pulling against each other. This pressure often results in parts of furniture no longer fitting together closely or becoming distorted or breaking from their own internal stresses.

The response to relative humidity changes begins with determining the annual average RH for your particular space. Then try to keep the RH in the space where your furniture is as close to that average as possible, generally within about 10% up or down. De-humidify in the summer and humidify in the winter.

Be aware that raising the temperature lowers the humidity and vice versa. Thus, modern heating systems, which can drive down interior RH in the winter, almost invariably cause problems for furniture. To counteract their effect, you can either modify the RH by keeping furniture containing spaces cooler in the winter or most importantly, have a good working humidifier for your home. A humidistat automatically works to balance the humidity in your home so it is constant. Dry indoor air can suck enough moisture from its surroundings to do permanent damage to wood, causing it to crack or split.

Remember, that not all woods are created equal. Two factors that help determine how rapidly a wood will lose moisture are pore size and surface hardness. A piece made from a dense and hard wood will dry less rapidly than pieces made from softer woods.

Furniture that is sealed and lacquered will lose moisture more slowly than an unfinished piece while pieces with veneer finishes are not only stronger, but lose moisture more slowly than other finishes.

To help protect your wood furniture, take these steps:

- Use a humidifier, preferably one with an automatic control system that can sense the humidity level and adjust itself accordingly. Don't over-humidify; that can damage wood by causing it to expand and contract.
- Keep furniture out of direct sunlight, which can cause it to dry out, crack and warp.
- If you can avoid it, don't put furniture near heating vents. If you must, keep the piece 3 to 4 inches away from the wall, giving the heat and air space to circulate.
- Dust with soft dry cloth.
- Do not use liquid or aerosol products.
- To avoid marking, do not place rubber on surface (foot pads, etc.)
- For soil build-up, wipe with damp cloth & dry.
- Do not use abrasive cleaners.

PARTS DESCRIPTION

A

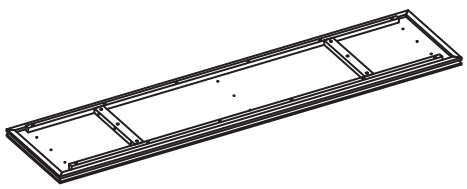

TOP
QTY 1

B

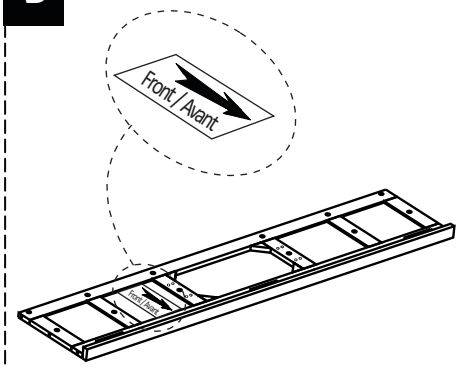

BOTTOM SHELF
QTY 1

C

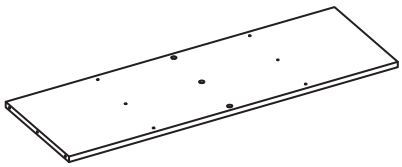

TOP SHELF
QTY 1

DL

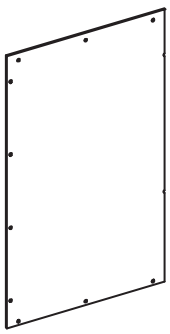

LEFT BACK PANEL
QTY 1

DR

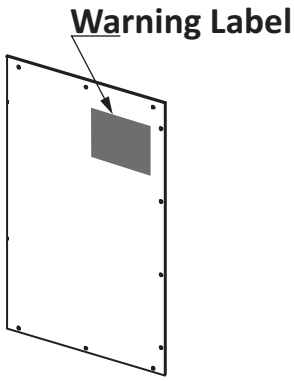

RIGHT BACK PANEL
QTY 1

D1

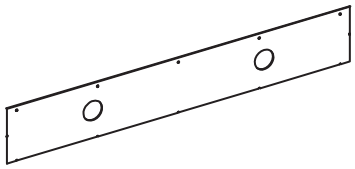

TOP BACK PANEL
QTY 1

D2

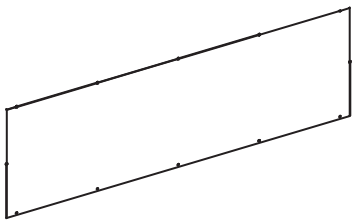

BOTTOM BACK PANEL
QTY 1

EL

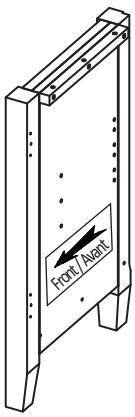

LEFT SIDE
QTY 1

ER

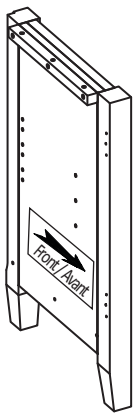

RIGHT SIDE
QTY 1

NEED HELP? For help with assembly or if you are missing a part,
Please call customer service at 1-866-518-0120 ext. 262 (9 am to 4 pm EST)

PRE-ASSEMBLY INFORMATION MODEL # AXCART72-TB

PARTS DESCRIPTION

FL

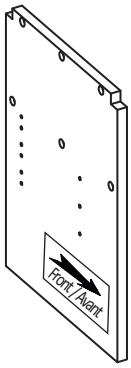

LEFT DIVIDER
QTY 1

FR

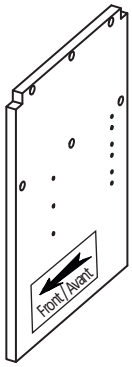

RIGHT DIVIDER
QTY 1

GL

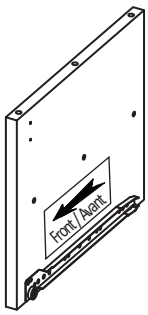

LEFT MIDDLE DIVIDER
QTY 1

GR

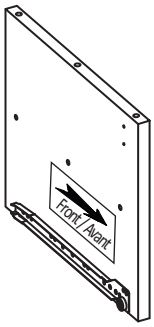

RIGHT MIDDLE DIVIDER
QTY 1

H

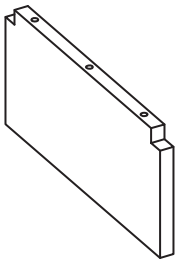

TOP DIVIDER
QTY 1

I

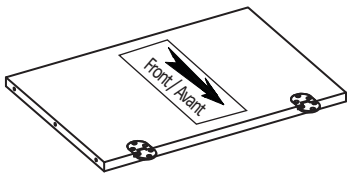

CENTER SHELF
QTY 1

J

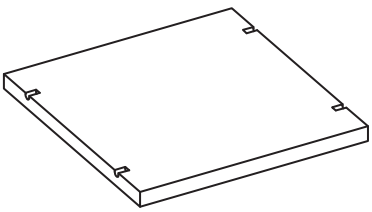

SHELF
QTY 2

K

LARGE DOOR (L&R Same)
QTY 2

L

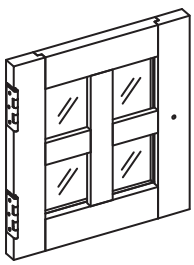

SMALL DOOR (L&R Same)
QTY 2

NEED HELP? For help with assembly or if you are missing a part,
Please call customer service at 1-866-518-0120 ext. 262 (9 am to 4 pm EST)

PARTS DESCRIPTION

M

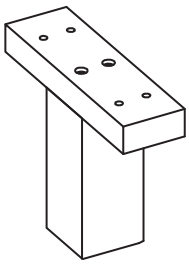

BOTTOM SUPPORT LEG
QTY 2

N

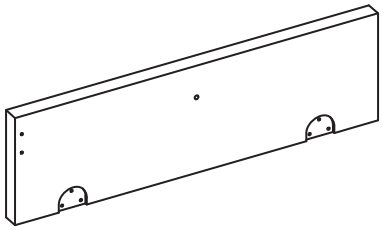

FLIP DOWN DOOR
QTY 1

O

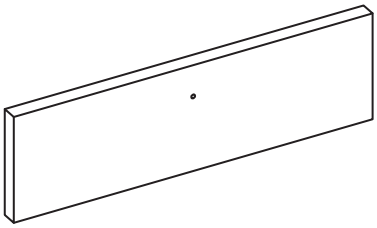

DRAWER FRONT
QTY 1

PL

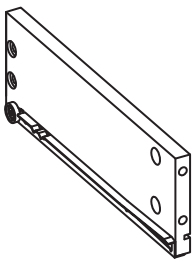

LEFT DRAWER SIDE
QTY 1

PR

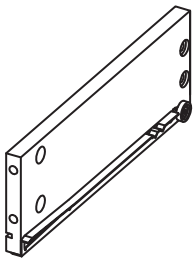

RIGHT DRAWER SIDE
QTY 1

Q

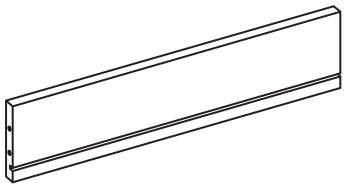

DRAWER BACK
QTY 1

R

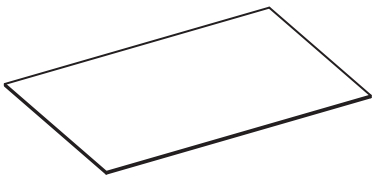

DRAWER BOTTOM
QTY 1

NEED HELP? For help with assembly or if you are missing a part,
Please call customer service at 1-866-518-0120 ext. 262 (9 am to 4 pm EST)

HARDWARE DESCRIPTION

1

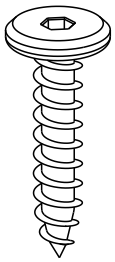

ALLEN KEY SCREW
M6 X 30 mm
QTY 43

2

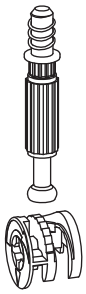

CAM LOCK PIN
CAM LOCK
QTY 19 SETS

3

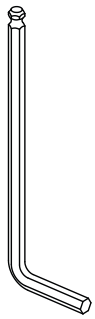

ALLEN KEY
QTY 1

4

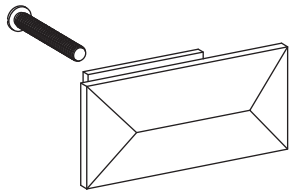

HANDLE
M4 X 30mm
QTY 6 SETS

5

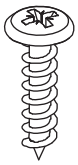

PHILLIPS SCREW
ROUND HEAD
M4 X 15 mm
QTY 39

6

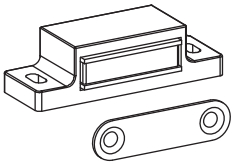

MAGNET AND PLATE
QTY 4 SETS

7

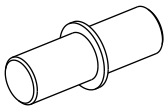

SHELF SUPPORT
QTY 12

8

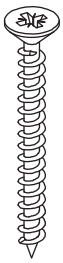

PHILLIPS SCREW
M4 X 30 mm
QTY 8

9

PHILLIPS SCREW
M3 X 12 mm
QTY 24

10

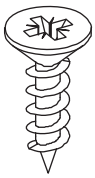

PHILLIPS SCREW
M3 X 15 mm
QTY 20

11

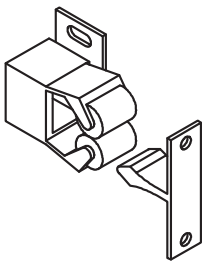

LATCH
QTY 1 SET

12

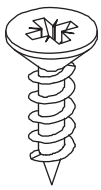

PHILLIPS SCREW
M4 X 15 mm
QTY 6

13

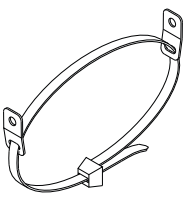

a. 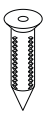 M4 X 25 - QTY 2
(1 is extra)

b. M4 X 15 - QTY 1

c. M4 X 25 - QTY 1

FURNITURE TIP OVER RESTRAINT
QTY 1 SET

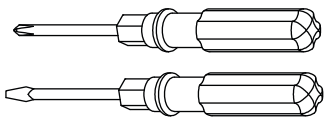

Required -
Flathead screwdriver
Phillips screwdriver
Not Included

NEED HELP? For help with assembly or if you are missing a part,
Please call customer service at 1-866-518-0120 ext. 262 (9 am to 4 pm EST)

COMPONENTS – KEY DIAGRAM

MODEL # AXCART72-TB

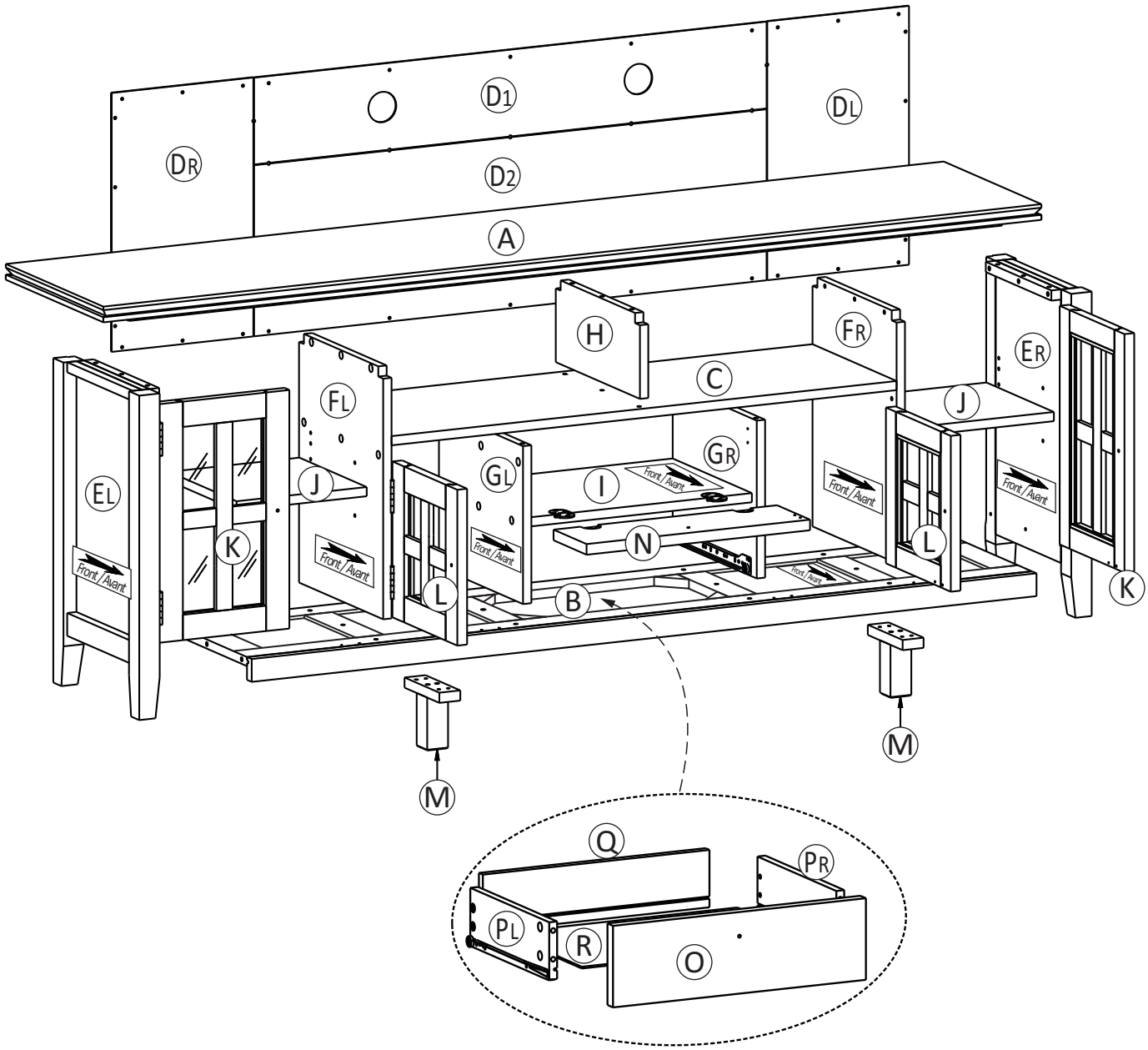

STEP 1

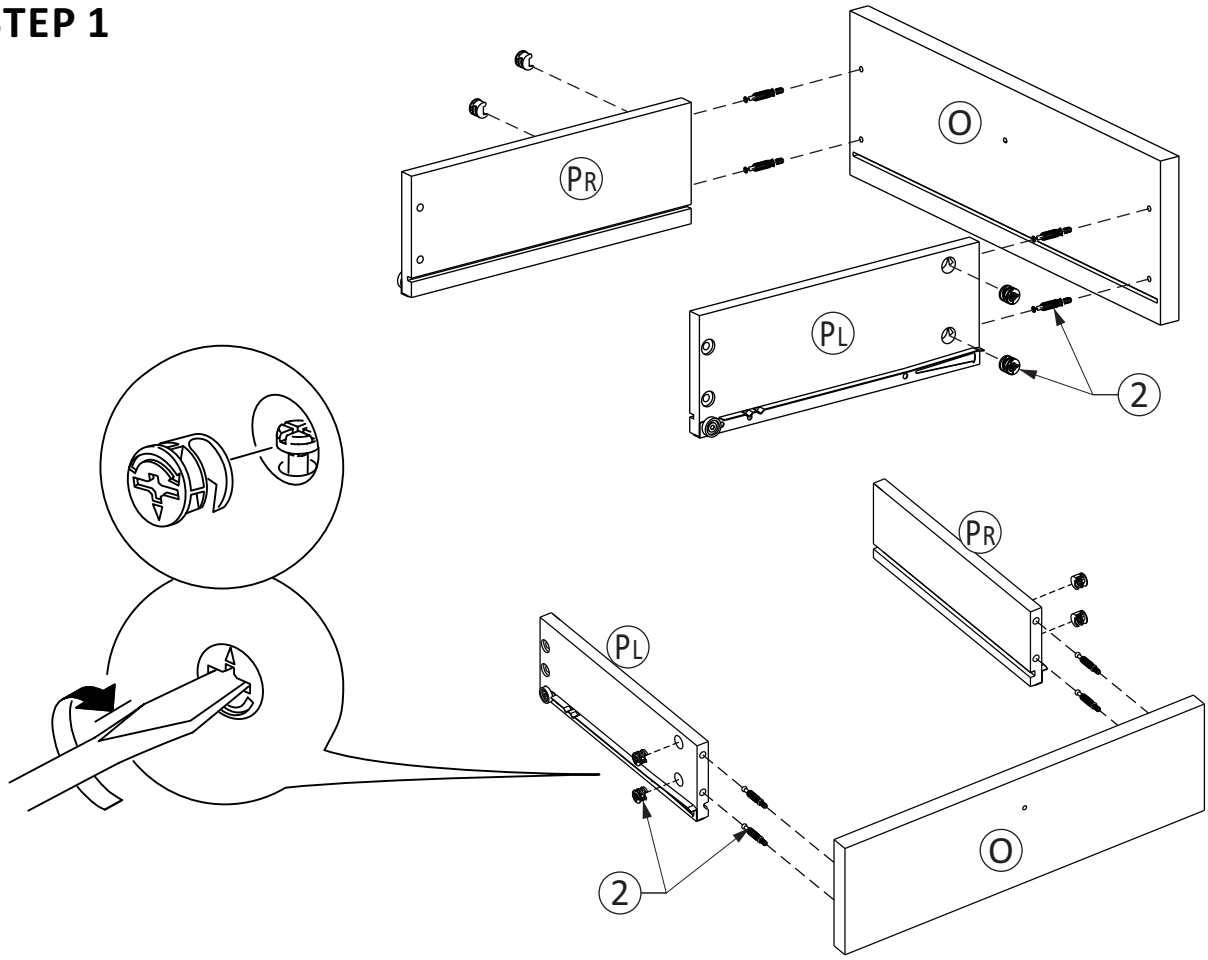

1. Attach 4 Cam Lock Pins (2) into pre-drilled holes at the back of Drawer Front (O) .
2. Align Cam Lock Pins with guide holes and attach Drawer Sides (PL), (PR) .
3. Insert 2 Cam Locks (2) into guide holes on each Drawer Side (PL), (PR) .
4. Use flathead screwdriver to secure Cam Locks.

STEP 2

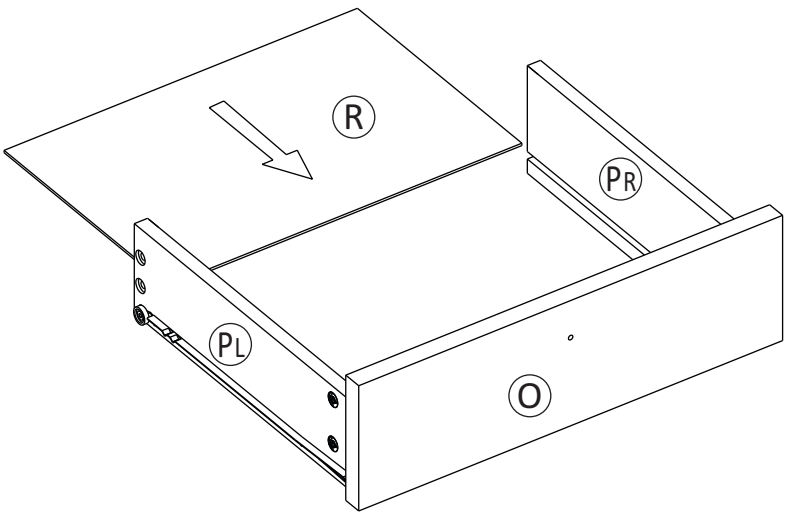

1. Slide Drawer Bottom (R) firmly into slots on Drawer Sides (PL), (PR) and Drawer Front (O).

STEP 3

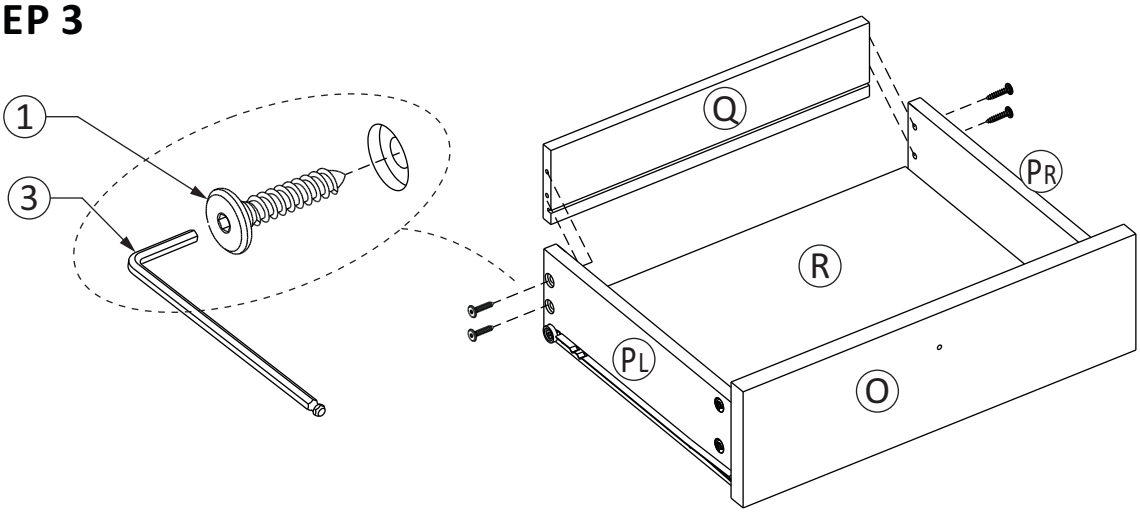

1. Align Drawer Back (Q) with Drawer Bottom (R) and press firmly into slot .
2. Attach back using 2 Allen Key Screws (1) through guide holes on each Side (PL), (PR) .
3. Use Allen Key (3) to tighten screws. Do not over-tighten.

STEP 4

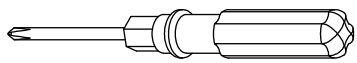

NOTE: The screwdriver is not included in the hardware pack.

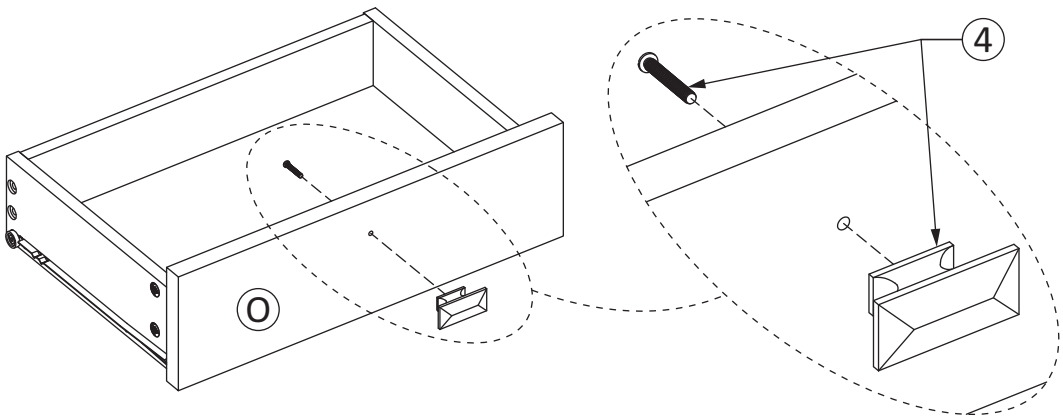

1. Use Phillips screwdriver to attach Handle (4) to Drawer Front (O) .

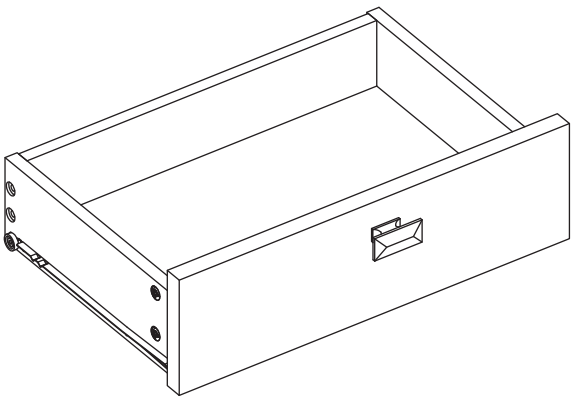

STEP 5

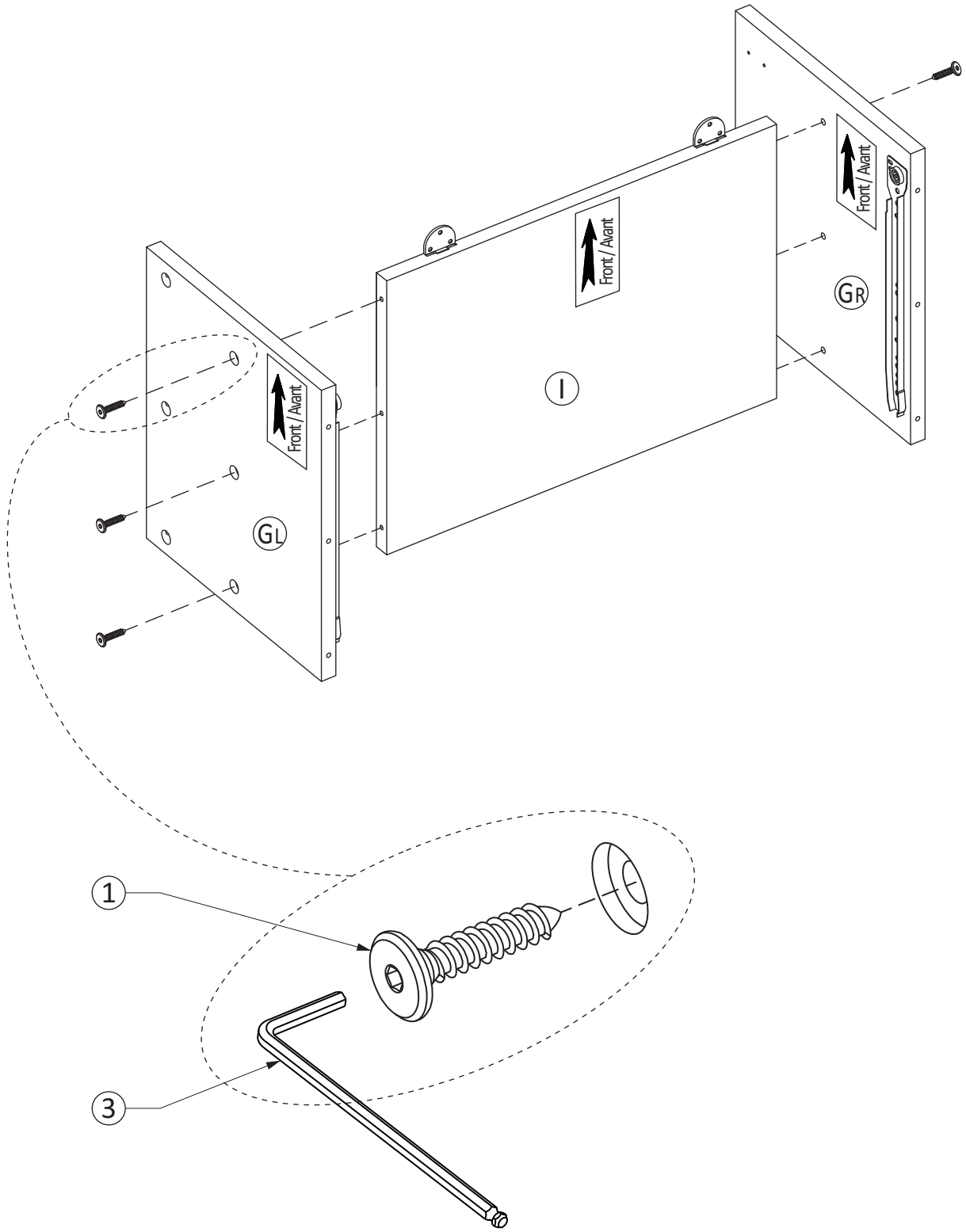

1. Attach Centre Shelf (I) to each Middle Divider (GL), (GR) using 3 Allen Key Screws (1).
2. Use Allen Key (3) to tighten screws. Do not over-tighten.

STEP 6

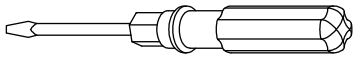

NOTE: The screwdriver is not included in the hardware pack.

1. Attach 6 Cam Lock Pins (2) into pre-drilled holes at the bottom of Top Shelf (C).
2. Align Cam Lock Pins with guide holes on Middle Divider (GL), (GR) .
3. Insert 3 Cam Lock (2) into guide holes on each Middle Divider (GL), (GR).
4. Use flathead screwdriver to secure Cam Lock .
5. Attach Top Divider (H) to Top Shelf (C) using 3 Allen Key Screws (1).

STEP 7

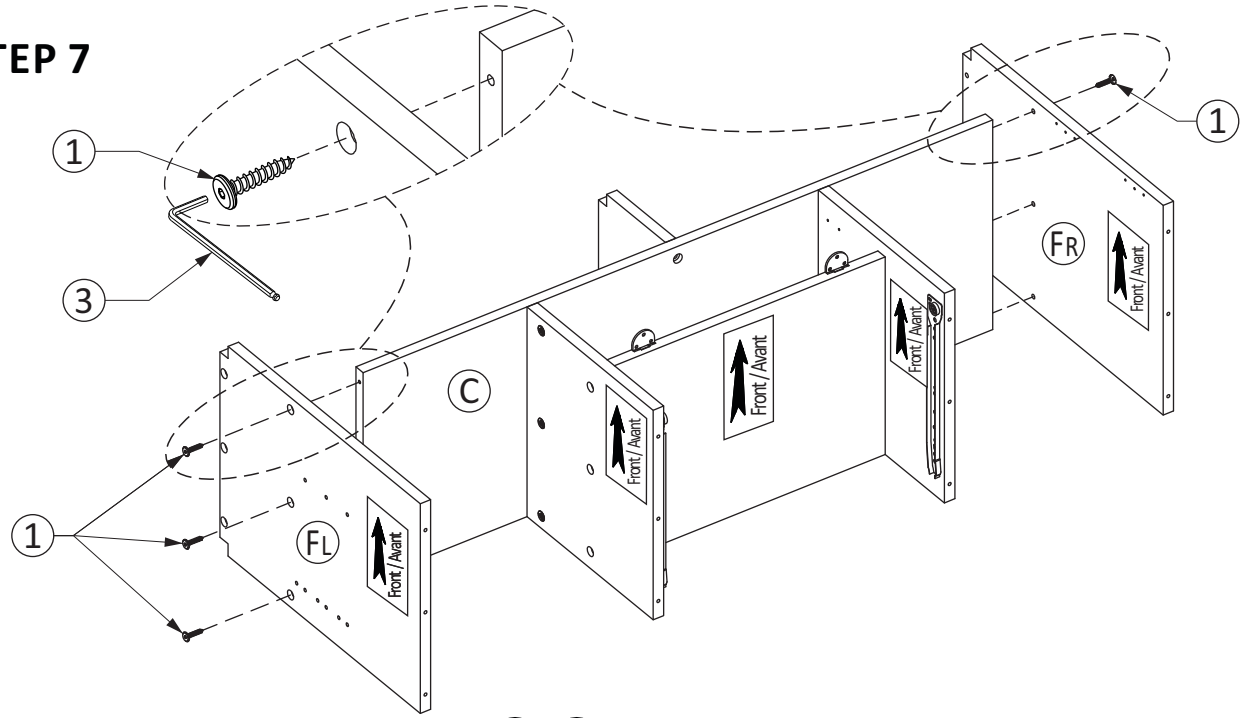

1. Attach Top Shelf Ⓒ to each Divider ⒻⓁ, ⒻⓇ using 3 Allen Key Screws ①.
2. Use Allen Key ③ to tighten screws. Do not over-tighten.

STEP 8

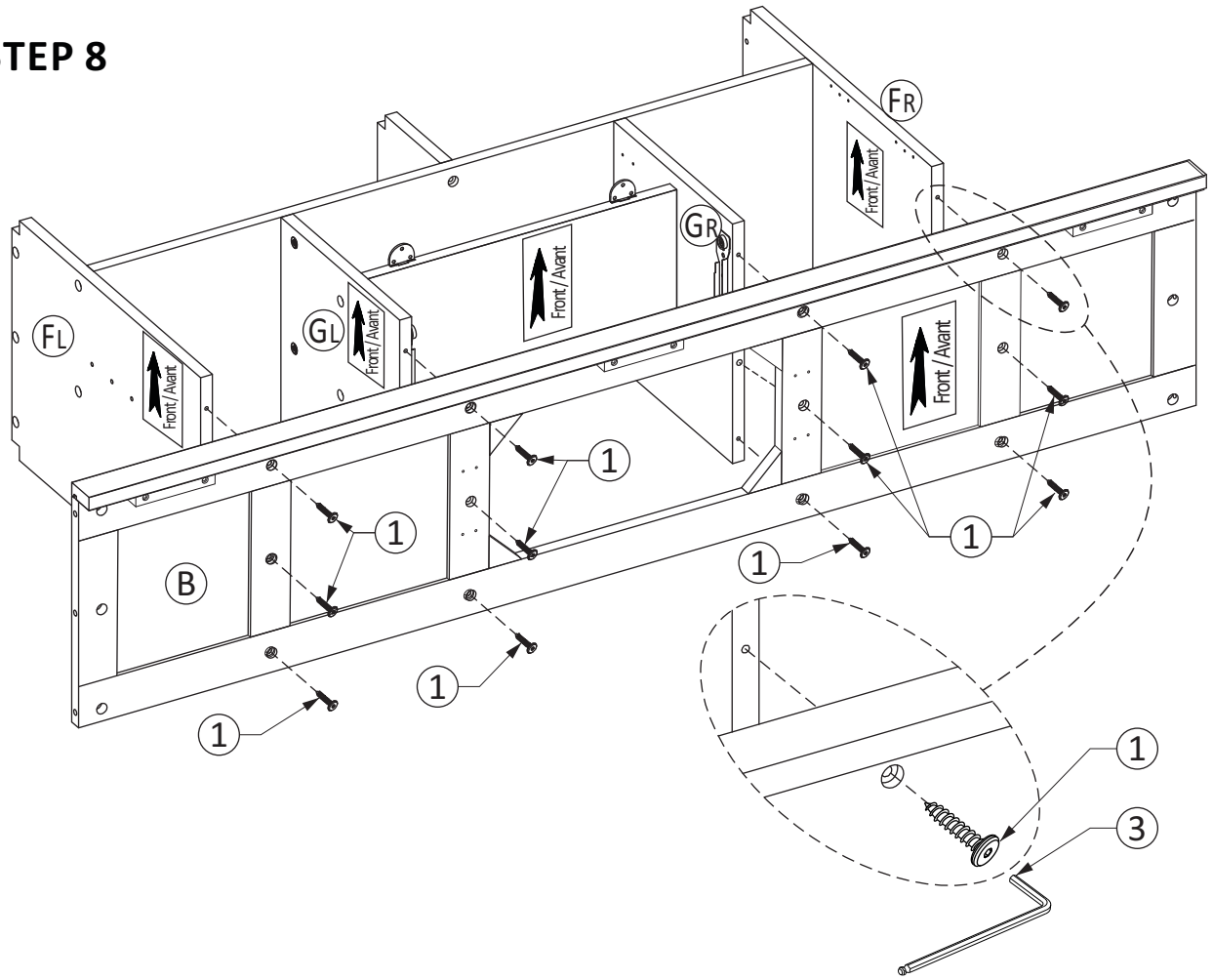

1. Attach Bottom Shelf Ⓑ to Dividers ⒻⓁ, ⒻⓇ & ⒼⓁ, ⒼⓇ using 12 Allen Key Screws ① (3 Allen Key Screws / each Divider).
2. Use Allen Key ③ to tighten screws. Do not over-tighten.

STEP 9

NOTE: The screwdriver is not included in the hardware pack.

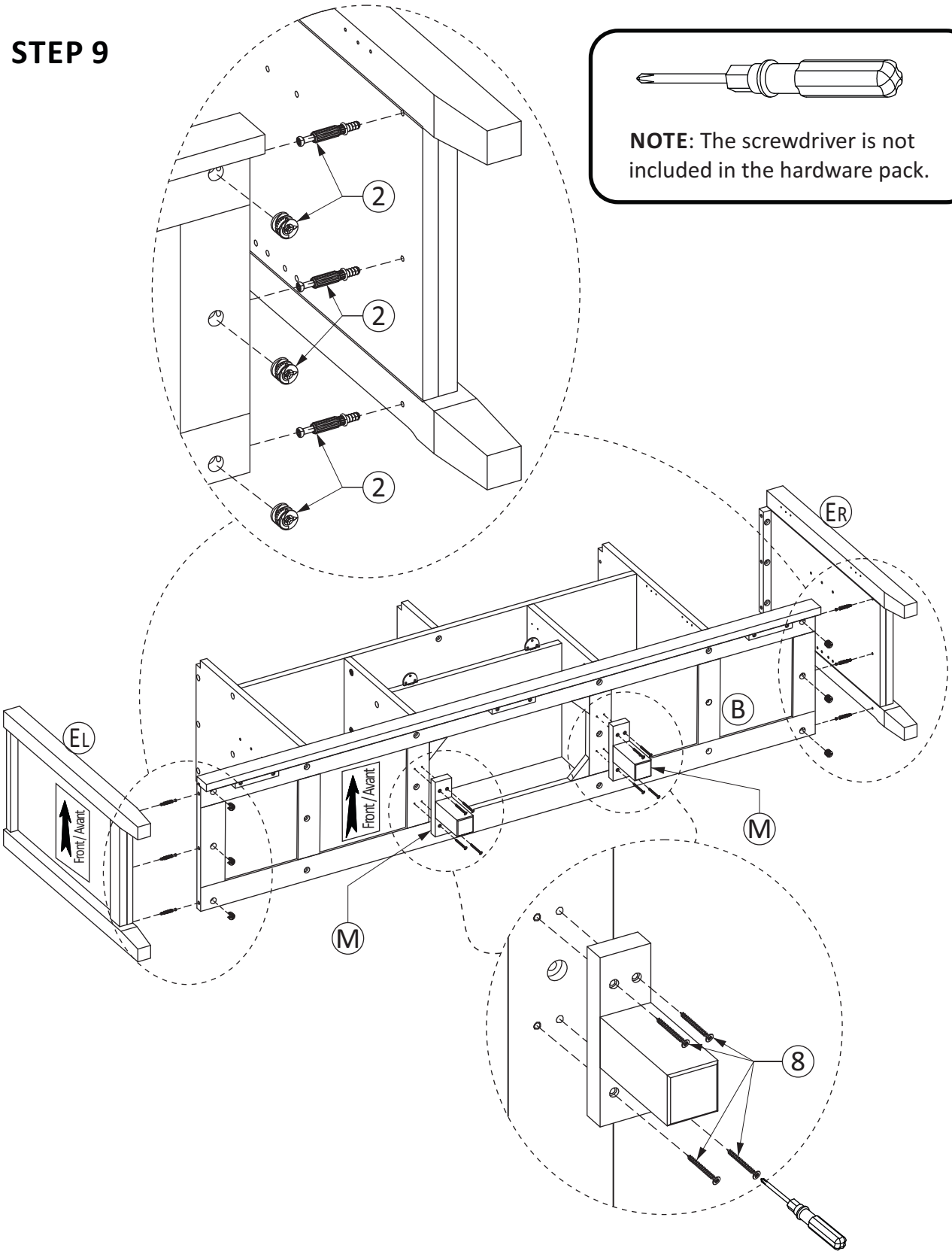

1. Attach 3 Cam Lock Pins ② into pre-drilled holes on each Side (EL), (ER).
2. Align Cam Lock Pins with guide holes and attach Bottom Shelf (B).
3. Insert 6 Cam Locks ② into guide holes on Bottom Shelf (B).
4. Use flathead screwdriver secure Cam Locks.
5. Attach 2 Bottom Support Legs (M) align with pre-drilled holes at back of Bottom Shelf (B). Use Phillips screwdriver to tighten 8 Phillips Screws ⑧.

STEP 10

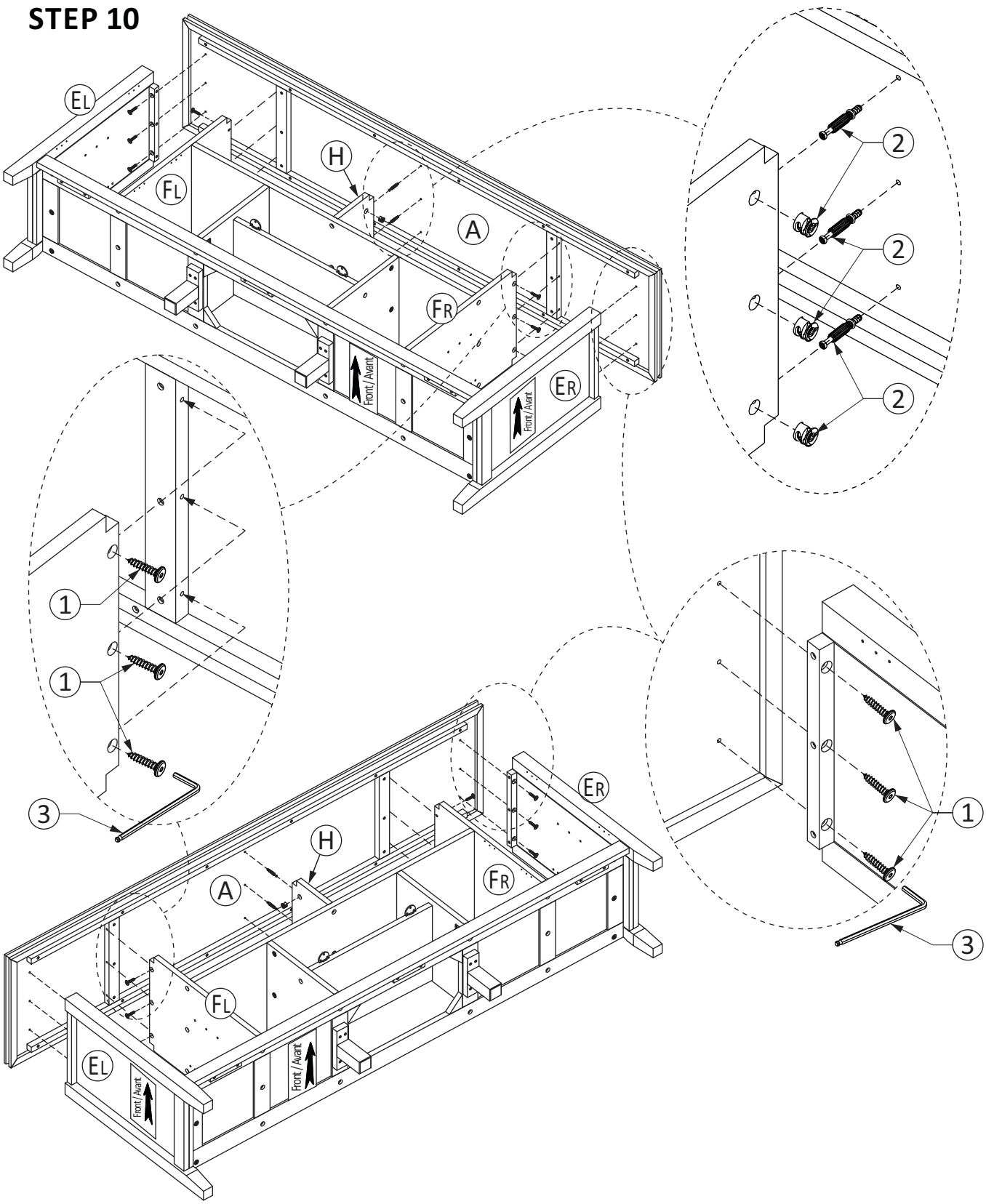

1. Attach 3 Cam Lock Pins ② into pre-drilled holes at the bottom of Top Ⓐ (at center) .
2. Align Cam Lock Pins with guide holes on Top Divider Ⓗ.
3. Insert 3 Cam Locks ② into guide holes on Top Divider Ⓗ.
4. Use flathead screwdriver to secure Cam Locks.
5. Attach the Bottom of Top Ⓐ to 2 Sides ⒺⓁ, ⒺⓇ and 2 Dividers ⒻⓁ, ⒻⓇ using 12 Allen Key Screws ① (3 Allen Key Screws / each part)

STEP 11

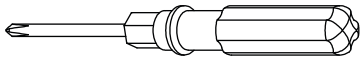

NOTE: The screwdriver is not included in the hardware pack.

Note:
The back of the tv frame does not have pre-drilled holes to attach the back panels.

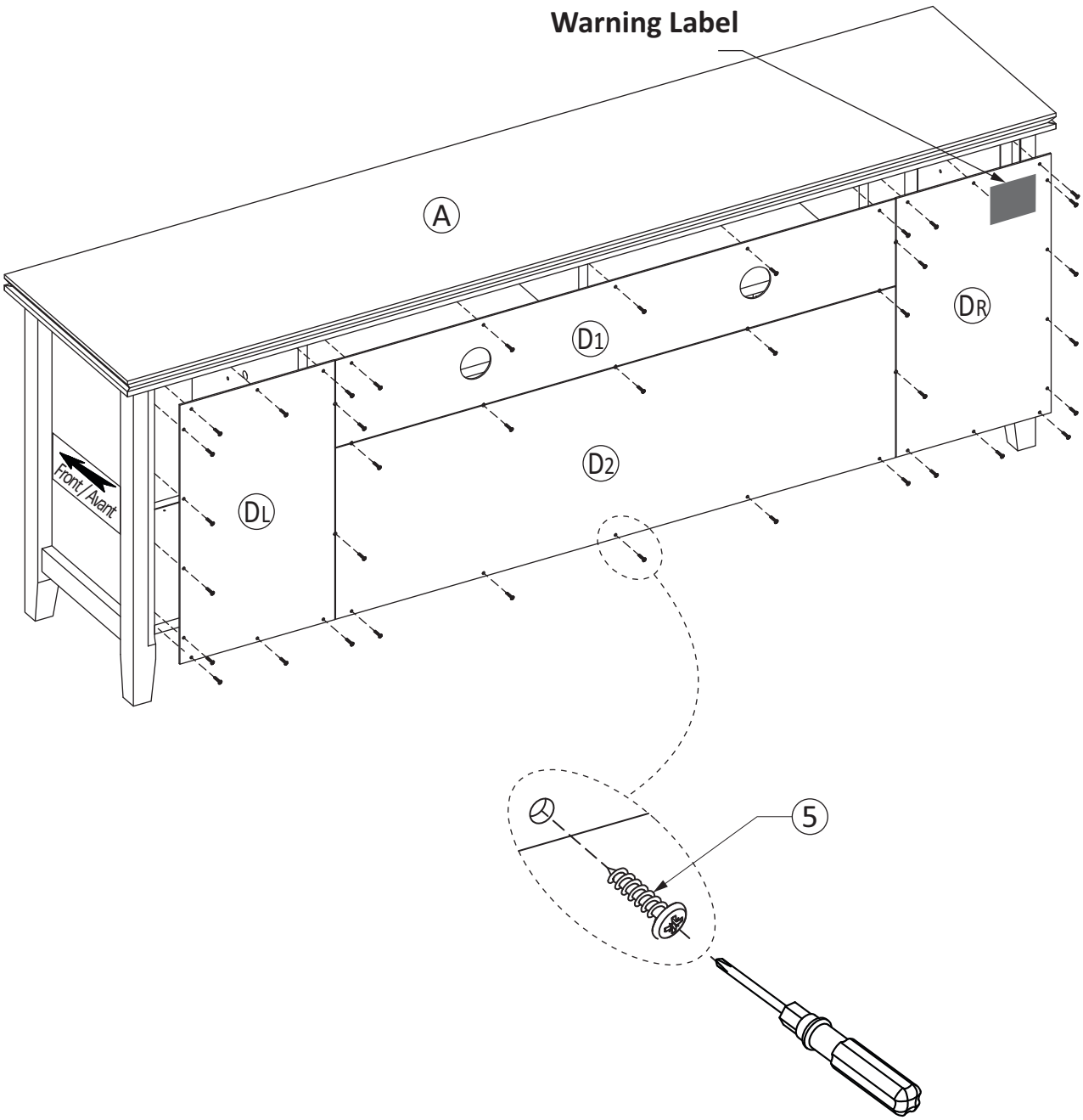

1. Use Phillips screws Round Head 5 to attach Back Panels DL, DR, D1, D2 through guild holes from Back Panels to the back of Cabinet.
2. Use Phillips screwdriver to tighten screws.

STEP 12

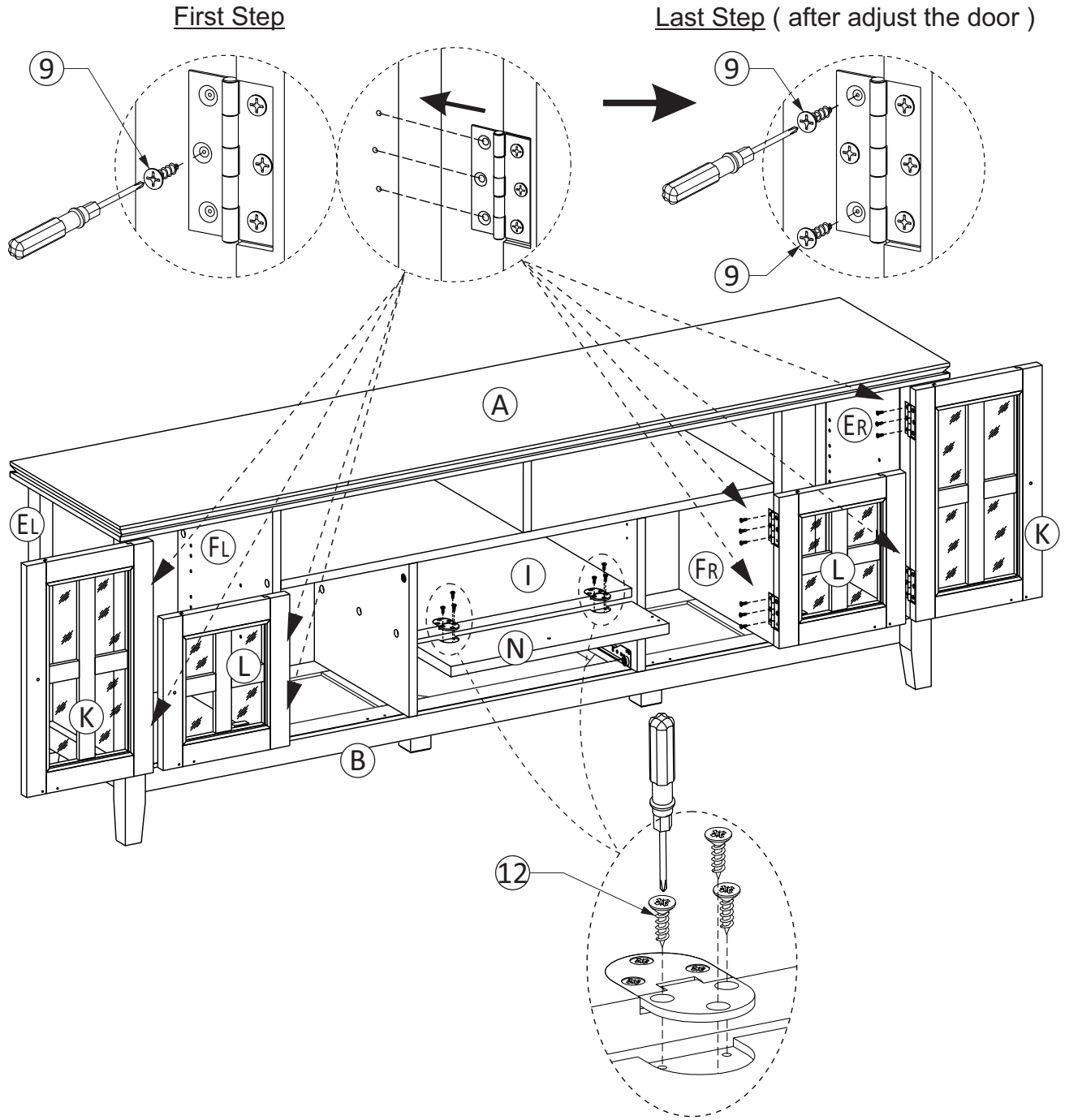

1. Attach hinges on Large Doors (K) to Sides (EL), (ER) and attach hinges on Small Doors (L) to Dividers (FL), (FR) using Phillips Screws (9) into pre-drill holes:
   - Using Phillips screwdriver to attach Screws (9) at middle hole of hinges for both top & bottom hinges.
   - Adjust the door to ensure they are aligned straight & square with bottom shelf & side.
   - Using Phillips screwdriver to tighten the rest of screws (9) into pre-drill holes (top & bottom holes on hinges).
2. Attach hinges on Center Shelf (I) to Flip Down Door (N) using Phillips Screws (12) into pre-drilled holes.

STEP 13

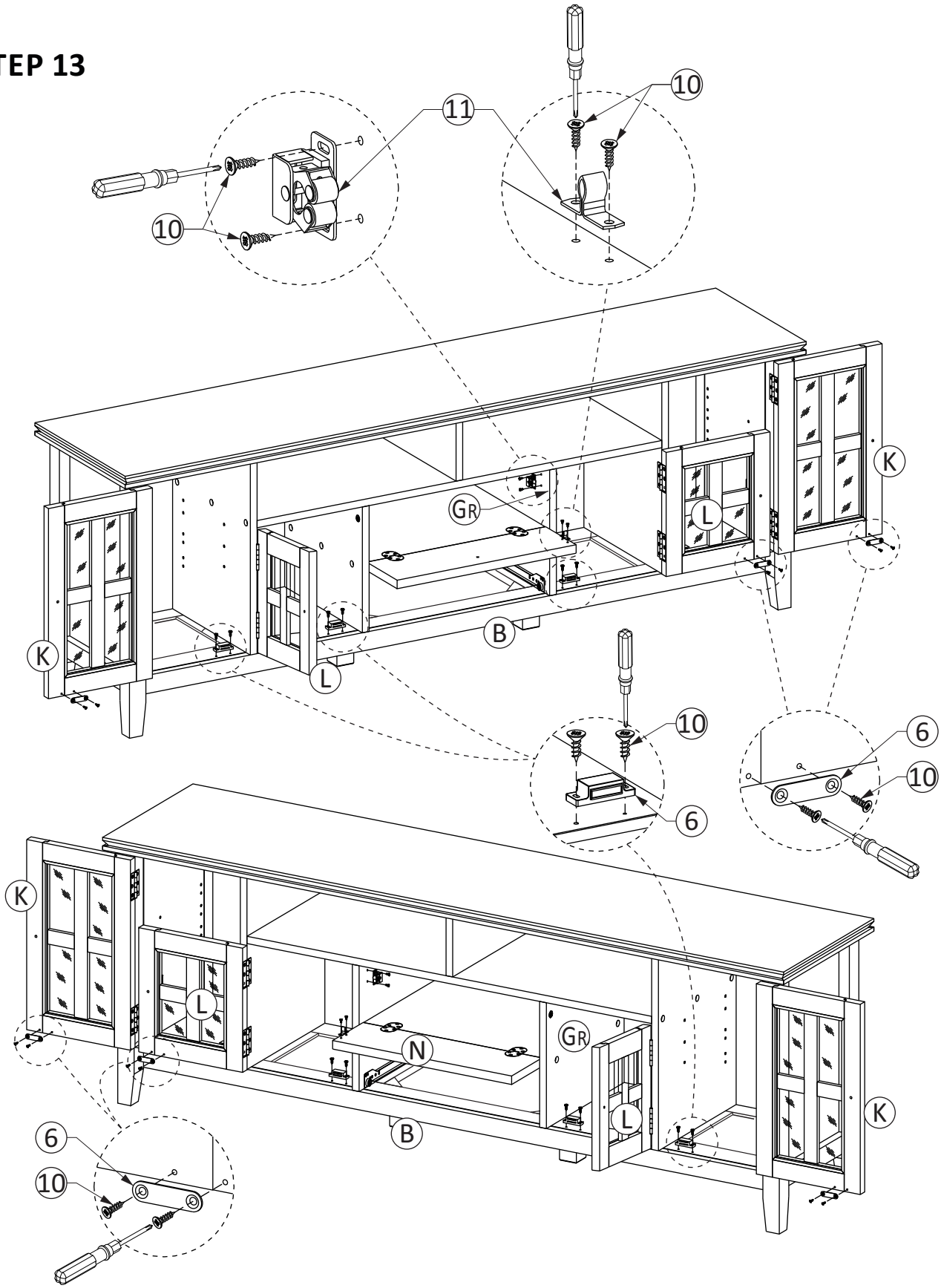

1. Attach 4 Magnet Plates (6) to bottom corner of Doors (K) and Doors (L) using Phillips Screws (10) into pre-drilled holes.
2. Attach 4 Magnets (6) using Phillips Screws (10) into pre-drilled holes on Bottom Shelf (B).
3. Attach Latch (11) to Divider (GR) and Flip Down Door (N) using Screw (10) into pre-drilled holes.

STEP 14

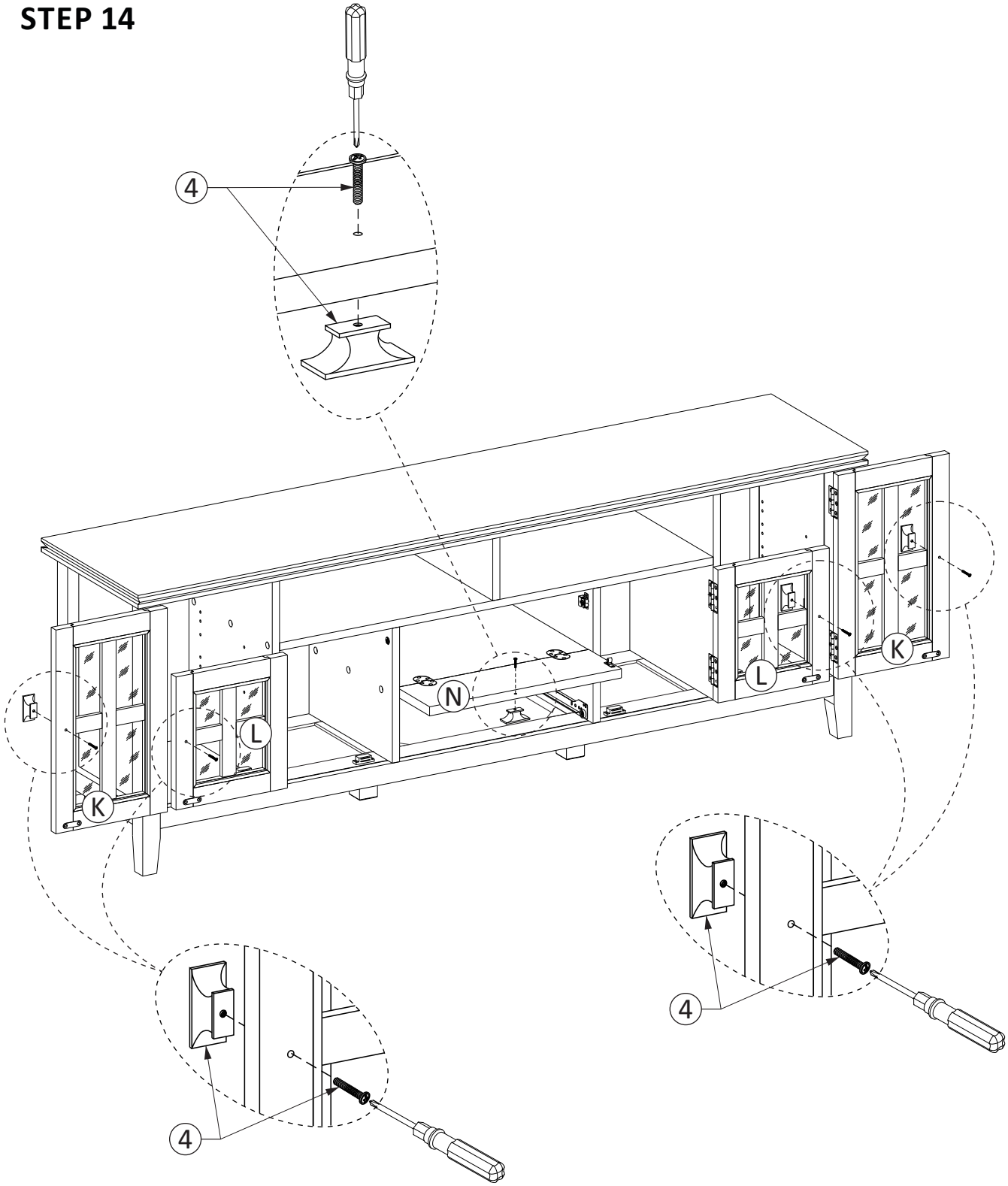

1. Use a Phillips screwdriver to attach Handles ④ to Doors Ⓚ, Ⓛ & Flip Down Door Ⓝ through guide holes.

STEP 15

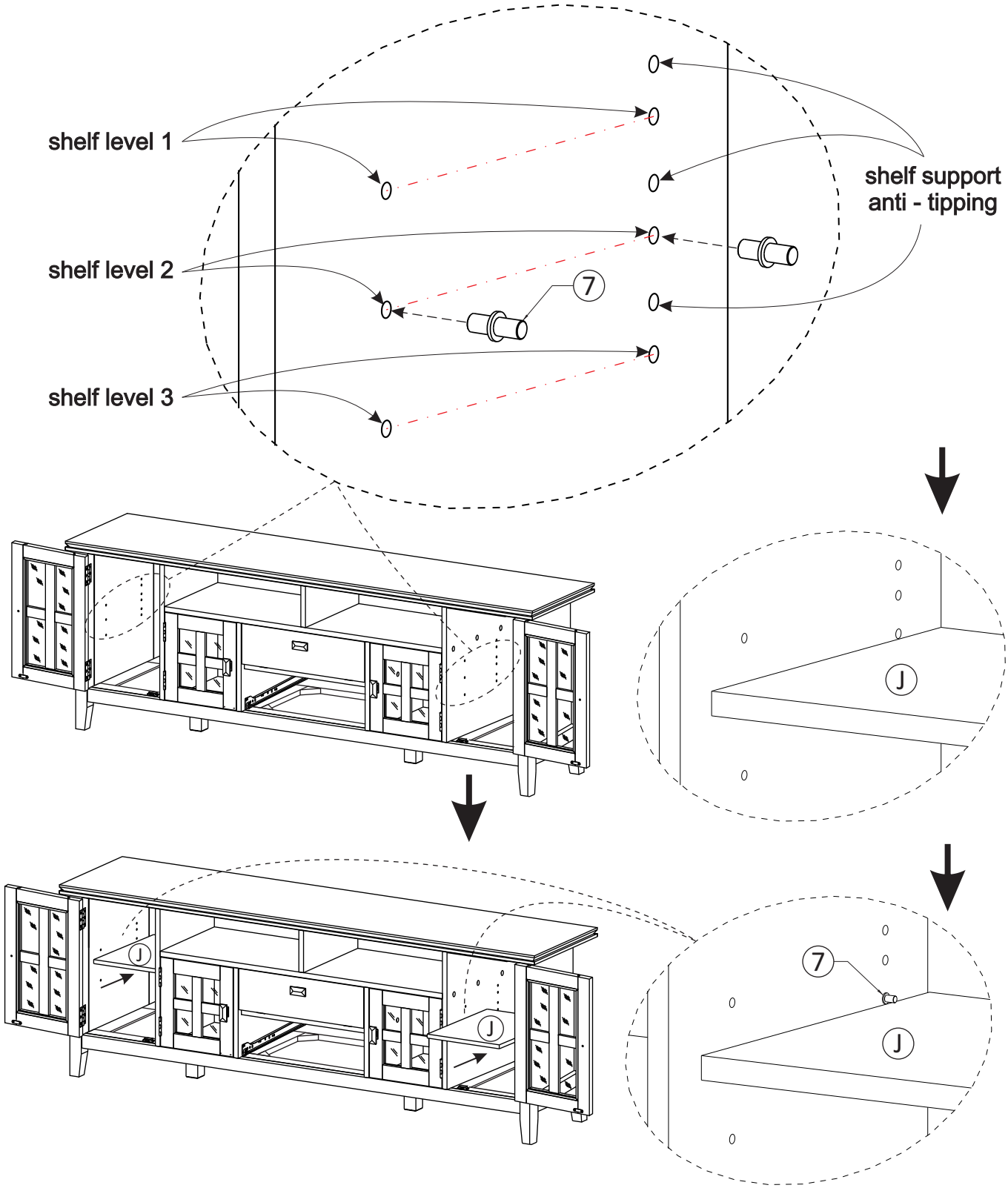

1. Attach 4 Shelf Supports (7) for each Shelf (J) in desired location .
2. 2 Shelf Supports (7) may be used on back top of each Shelf (J) as a tipping restraint.

STEP 16

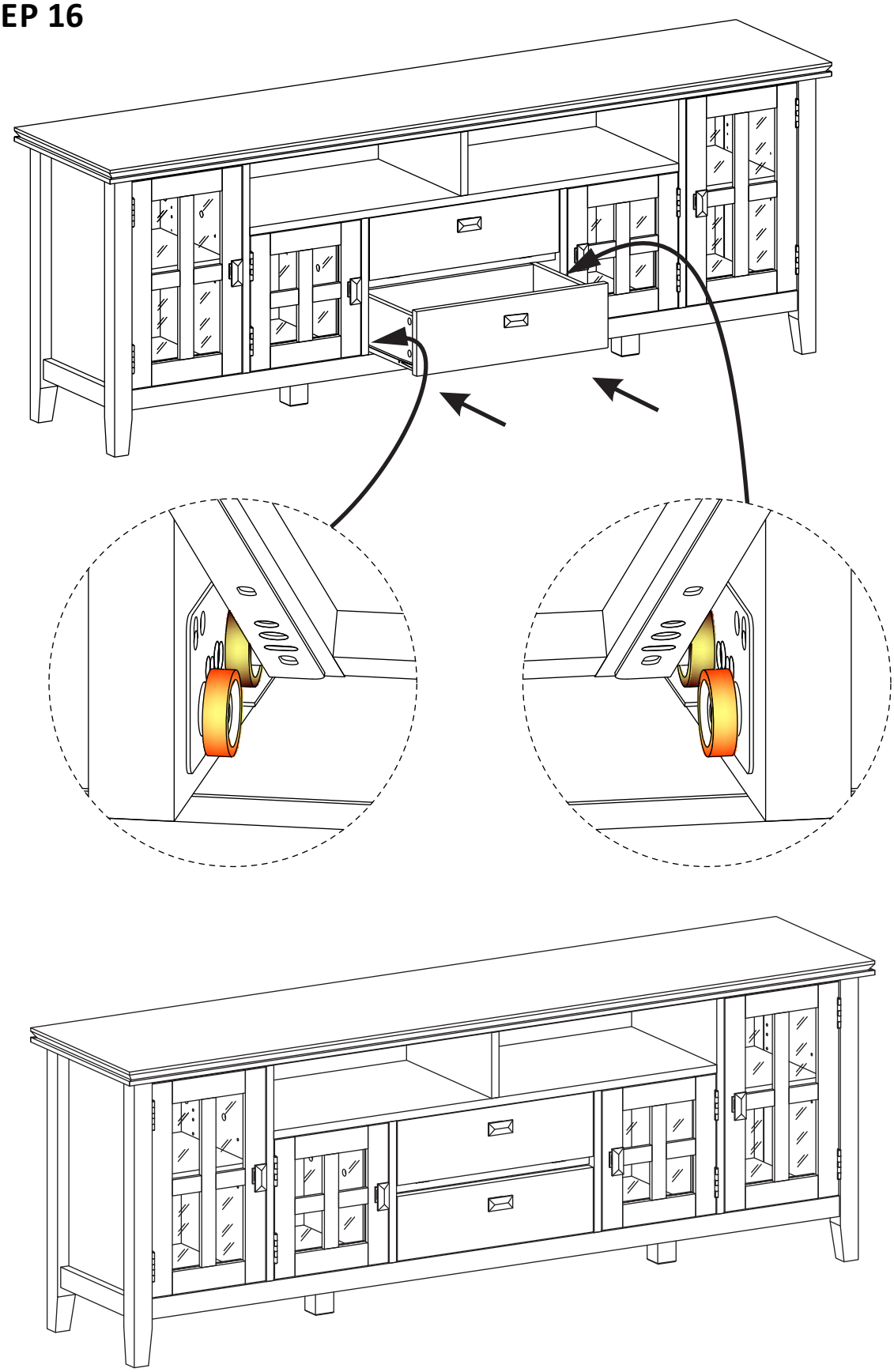

1. Insert assembled drawers into glides on assembled TV

FURNITURE TIP OVER RESTRAINT ASSEMBLY

WARNING

Serious or fatal crushing injuries can occur from furniture tip-over.
If the furniture tip over restraint kit is not in the box, please contact our customer service department in order to obtain another kit before using the furniture.

STEP 17

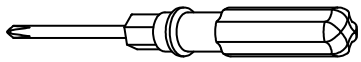

NOTE: The screwdriver is not included in the hardware pack.

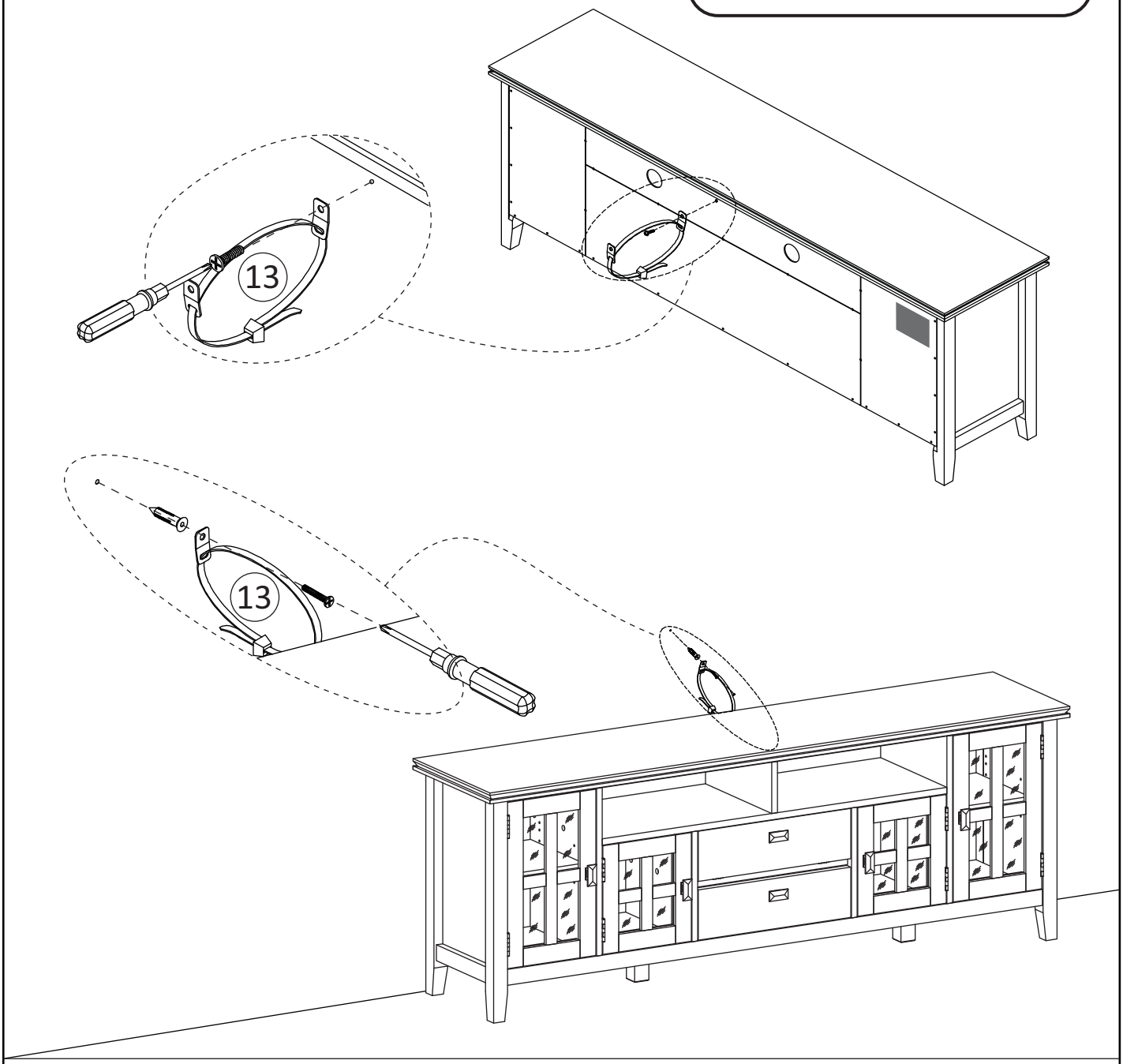

FURNITURE TIP OVER RESTRAINT ASSEMBLY

Furniture Tip Over Restraint Instructions:

1. Attach one of the mounting brackets securely to the back edge of the furniture. Use the shorter screw.

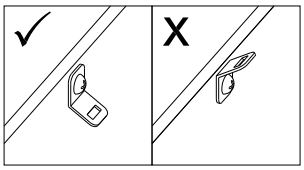

2. Determine where furniture is to be placed and mark location on the wall for mounting bracket screw hole approximately 2 inches **below** the bracket mounted to the furniture.

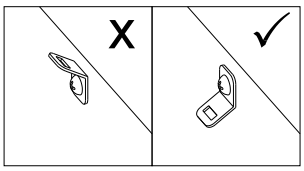

3. Drill a 3/16 inch hole in the wall. Press the plastic anchor into the hole and gently tap until the flange on the anchor is against the wall surface.
4. Position the bracket over the anchor and use the longer screw to securely attach the bracket to the wall.
5. Place the furniture so the back edge is in line with the bracket on the wall.
6. Lace an end of the nylon zip-tie strap down through each bracket. Bring both ends together and slide the smooth side upright through the square-shaped end and pull through to create the "locked" position.
7. Check to make sure the strap is securely laced and locked to the brackets.

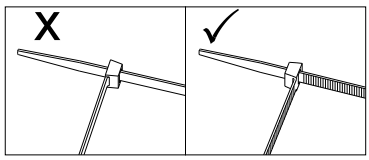

- **DO NOT** place heavy objects in top drawers
- **DO NOT** let children climb or hang on drawers, doors or shelves

WARRANTY

Thank you for purchasing a **Simpli Home – Wyndenhall – Brooklyn + Max** product. These products have been made to demanding, high-quality standards and are guaranteed for domestic use against manufacturing faults for a period of 12 months from the date of purchase. This warranty does not affect your statutory rights.

In case of any malfunction of your product (failure, missing parts, etc.) please contact us at our toll free service line at 1-866-518-0120 ext. 262 from 9 am to 4 pm, Monday to Friday, Eastern Standard Time or by email at customerservice@simpli-home.com.

We reserve the right to repair or replace the defective product, at its discretion.

This product is guaranteed for 12 months if used for normal purposes. Any warranty is invalid if the product has been overloaded or subject to neglect, improper use or an attempted repair by other than an authorized agent. Heavy-duty or daily professional/commercial usage are not guaranteed.

Due to continuous product improvement, we reserve the right to change the product specifications without prior notice.