Item #1006596132, 1006596140, 1006596143, 1006596129, 1006596135, 1006596131
Model #W1230, W1530, W1830, W2430, W3030, W3630

HAMPTON BAY®

USE AND CARE GUIDE

WALL CABINET

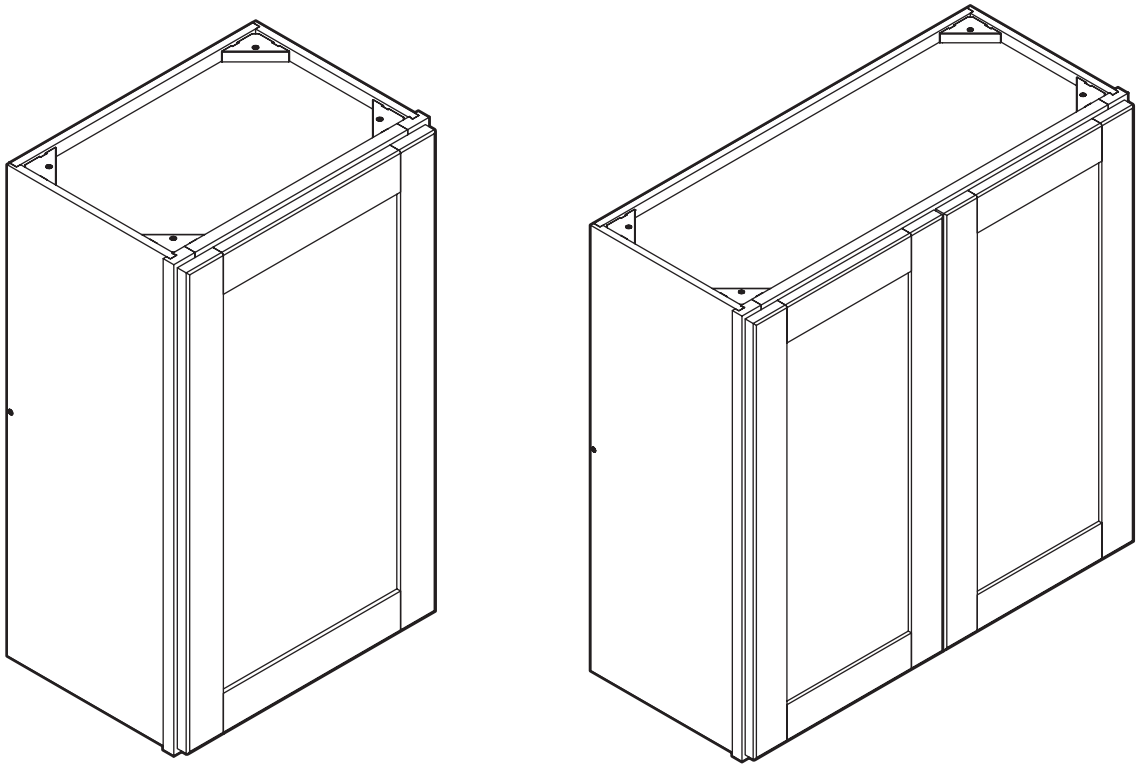

Questions, problems, missing parts? Before returning to the store,
call Hampton Bay Customer Service
8 a.m. - 7 p.m., EST, Monday – Friday, 9 a.m. – 6 p.m., EST, Saturday

1-855-HD-HAMPTON

HAMPTONBAY.COM

THANK YOU

We appreciate the trust and confidence you have placed in Hampton Bay through the purchase of this wall cabinet. We strive to continually create quality products designed to enhance your home. Visit us online to see our full line of products available for your home improvement needs. Thank you for choosing Hampton Bay!

Table of Contents

Safety Information 2
Warranty 2
Pre-Assembly 3
Before You Begin 3
Tools Required 3
Hardware Included. 3
Package Contents 4
Assembly. 5
Care and Cleaning 9

Safety Information

Please read and understand these instructions before you begin this assembly.

CALIFORNIA RESIDENTS

WARNING: This product can expose you to chemicals including Formaldehyde (GAS), which is [are] known to the State of California to cause cancer. For more information go to WWW.P65Warnings.ca.gov/products.

MINNESOTA RESIDENTS

IMPORTANT HEALTH NOTICE

SOME OF THE BUILDING MATERIALS USED IN THIS HOME (OR THESE BUILDING MATERIALS) EMIT FORMALDEHYDE. EYE, NOSE, AND THROAT IRRITATION, HEADACHE, NAUSEA AND A VARIETY OF ASTHMA-LIKE SYMPTOMS, INCLUDING SHORTNESS OF BREATH, HAVE BEEN REPORTED AS A RESULT OF FORMALDEHYDE EXPOSURE. ELDERLY PERSONS AND YOUNG CHILDREN, AS WELL AS ANYONE WITH A HISTORY OF ASTHMA, ALLERGIES, OR LUNG PROBLEMS, MAY BE AT GREATER RISK. RESEARCH IS CONTINUING ON THE POSSIBLE LONG-TERM EFFECTS OF EXPOSURE TO FORMALDEHYDE.

REDUCED VENTILATION MAY ALLOW FORMALDEHYDE AND OTHER CONTAMINANTS TO ACCUMULATE IN THE INDOOR AIR. HIGH INDOOR TEMPERATURES AND HUMIDITY RAISE FORMALDEHYDE LEVELS. WHEN A HOME IS TO BE LOCATED IN AREAS SUBJECT TO EXTREME SUMMER TEMPERATURES, AN AIR-CONDITIONING SYSTEM CAN BE USED TO CONTROL INDOOR TEMPERATURE LEVELS. OTHER MEANS OF CONTROLLED MECHANICAL VENTILATION CAN BE USED TO REDUCE LEVELS OF FORMALDEHYDE AND OTHER INDOOR AIR CONTAMINANTS.

IF YOU HAVE ANY QUESTIONS REGARDING THE HEALTH EFFECTS OF FORMALDEHYDE, CONSULT YOUR DOCTOR OR LOCAL HEALTH DEPARTMENT.

Warranty

Contact the Customer Service Team at 1-855-HD-HAMPTON or visit www.HAMPTONBAY.com.

Pre-Assembly

BEFORE YOU BEGIN

Compare all parts with the Hardware Included and Package Contents sections. If any part is missing or damaged, do not assemble this product. Contact Customer Service.

Assemble the cabinet on a soft surface such as carpet or the cardboard container of this product.

TOOLS REQUIRED

Phillips screwdriver

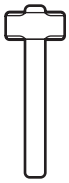

Rubber mallet

HARDWARE INCLUDED

NOTE: Hardware not shown to actual size.

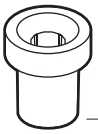

AA

BB

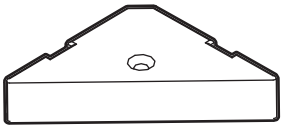

CC

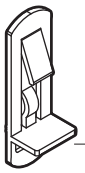

DD

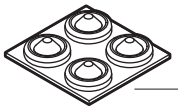

EE

Part	Description	Total Quantity	Extras*
AA	Posts	17	1
BB	#8 x 1 in. Screws (yellow)	34	4-6
CC	Corner Locks	8	0
DD	Shelf Pins	13	1-9
EE	Silicone Pads	10	6-8

*Extras quantity is based upon your cabinet size.

PACKAGE CONTENTS

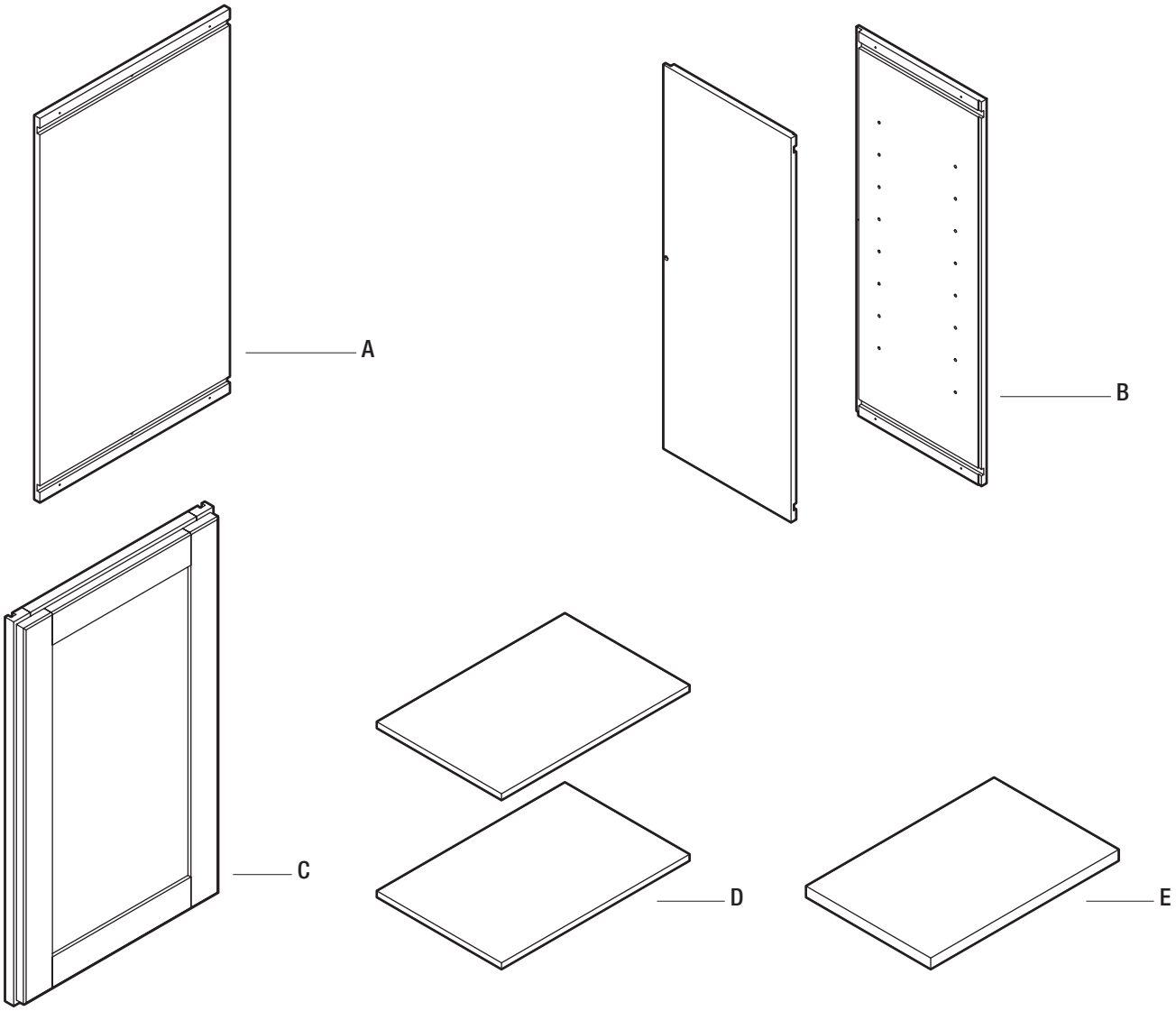

Part	Description	Quantity
A	Back Panel	1
B	Side Panels	2
C	Face Frame	1
D	Top and Bottom Panels	2
E	Shelves	2*

** 24 in. Tall cabinets have 1 shelf and 42 in. tall cabinets have 3 shelves.*

1 Attaching the posts to the panels

- ☐ Align four posts (AA) with pre-drilled holes on each of the panels and frame (A – C) and secure with four screws (BB) on each panel and frame (A – C).

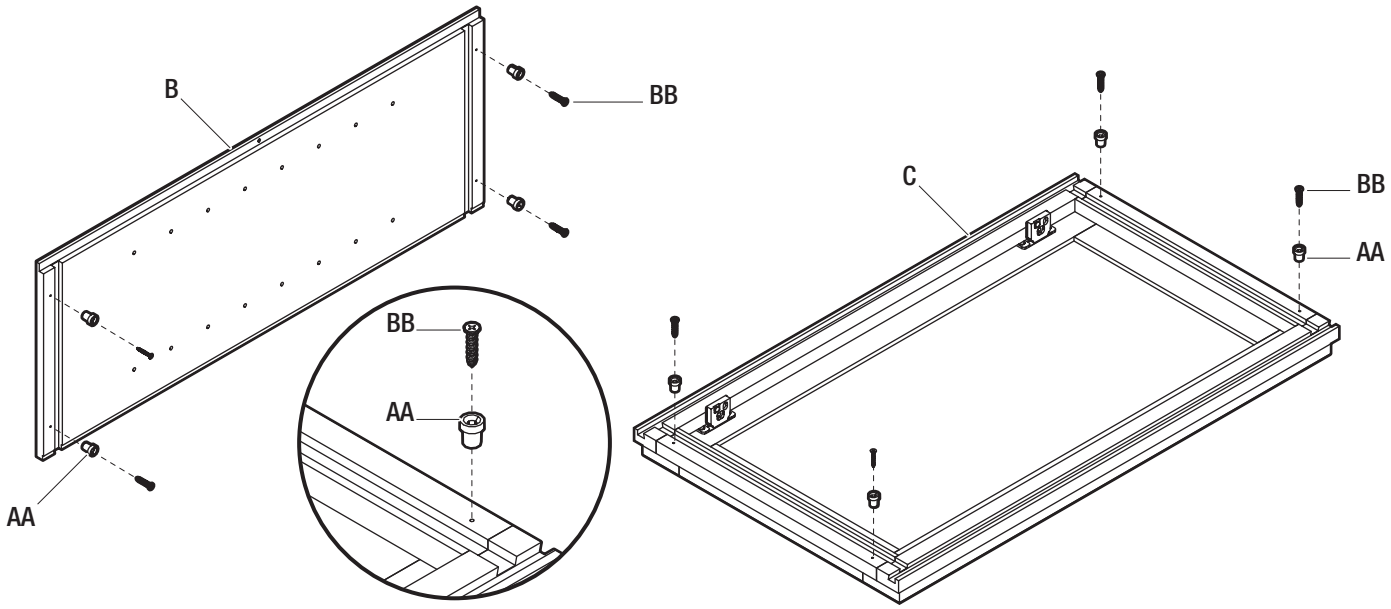

2 Attaching the side panels into the face frame

- ☐ Start by placing the face frame (C) flat on a smooth surface that will not scratch or damage the face of the cabinet, such as a towel or piece of cardboard (1) from the packaging with the door facing down. Slide the two side panels (B) into the mating grooves on the face frame (C).

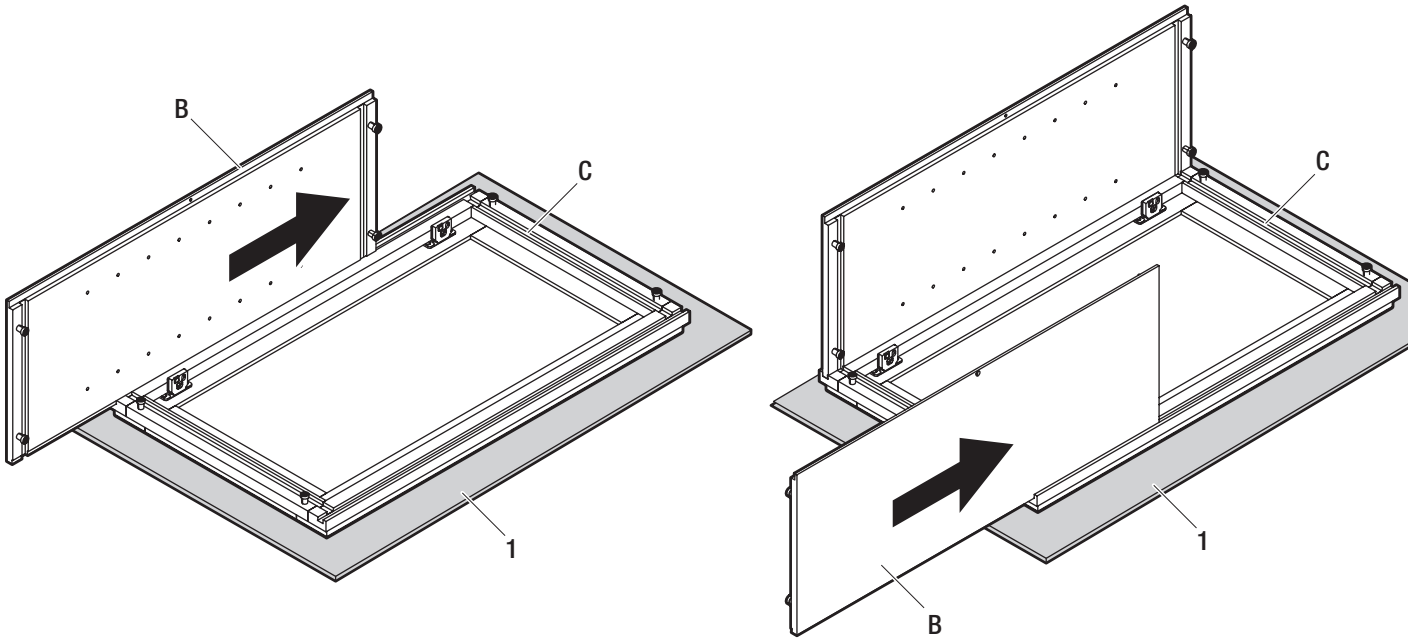

3 Attaching the top and bottom panels

- ☐ Slide top and bottom panels (D) into the grooves of the assembly.
- ☐ Snap four corner locks (CC) over the posts to secure the assembly, as shown. The remaining four corner locks (CC) are installed in the next step.

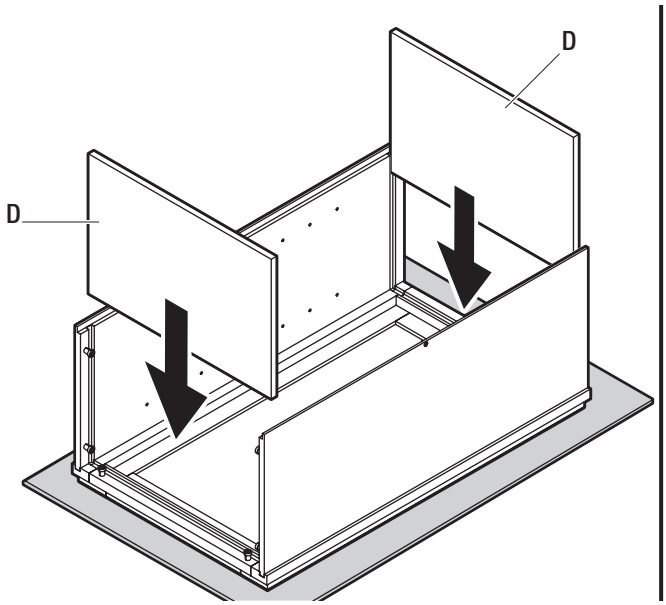

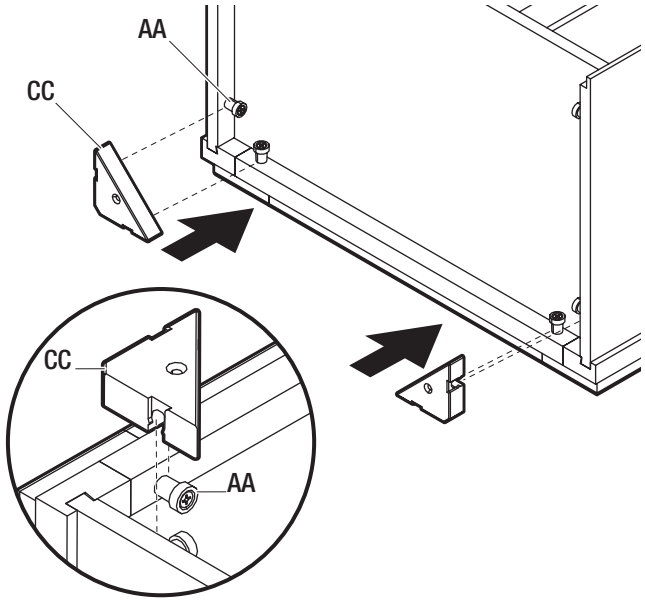

4 Attaching the back panel

- ☐ Install the back panel (A) and attach the four remaining corner locks (CC), as shown.

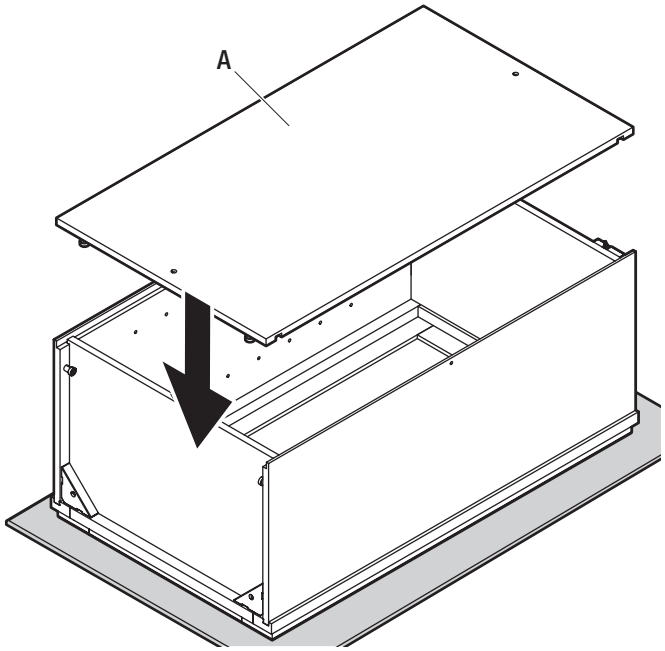

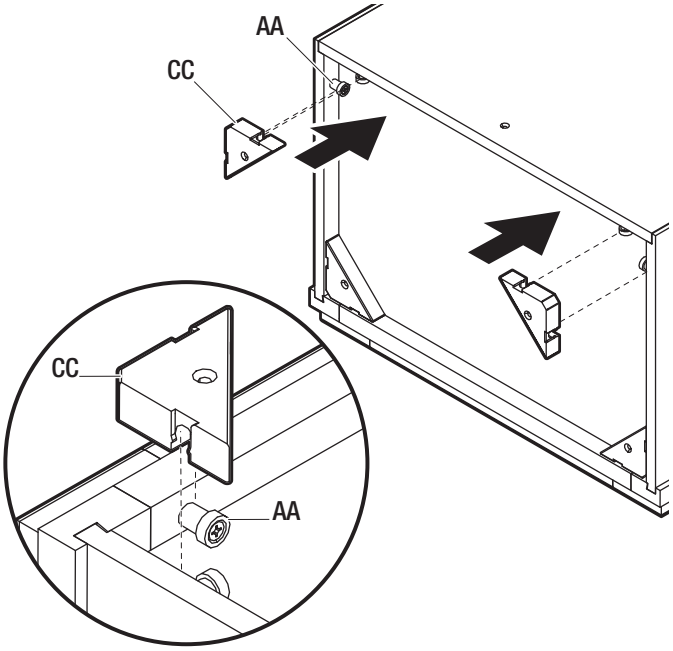

5 Securing the corner locks

- ☐ Insert a screw (BB) through the hole in each of the eight corner locks (CC), and screw into the top/bottom panels.

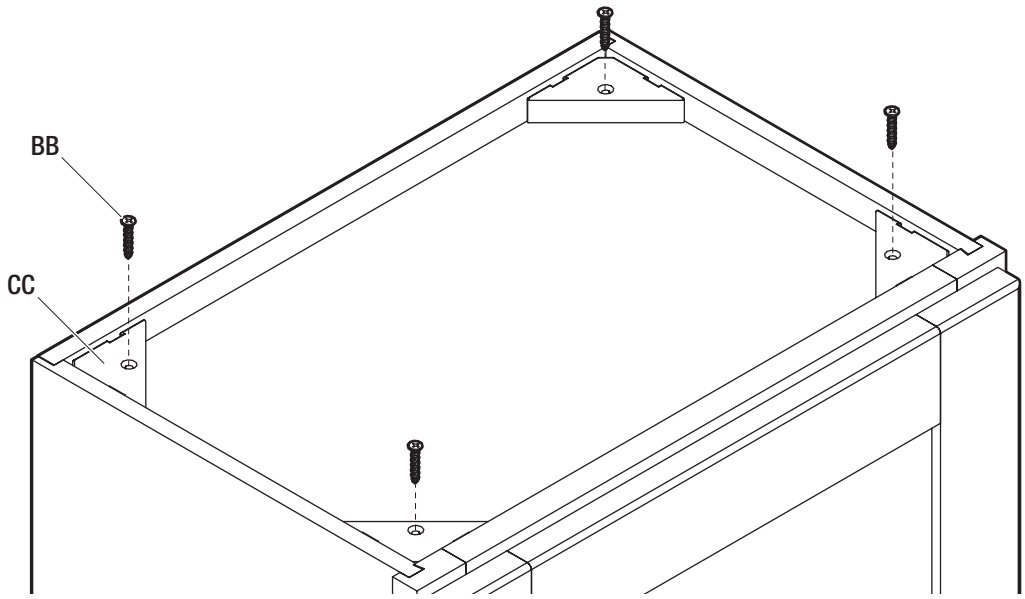

6 Securing the back and side panels in place

- ☐ Insert screws (BB) into countersunk holes in the back (A) and side panels (B).

NOTE: Wall cabinets 27 in. and wider will have four holes through the back, all other sizes will have two.

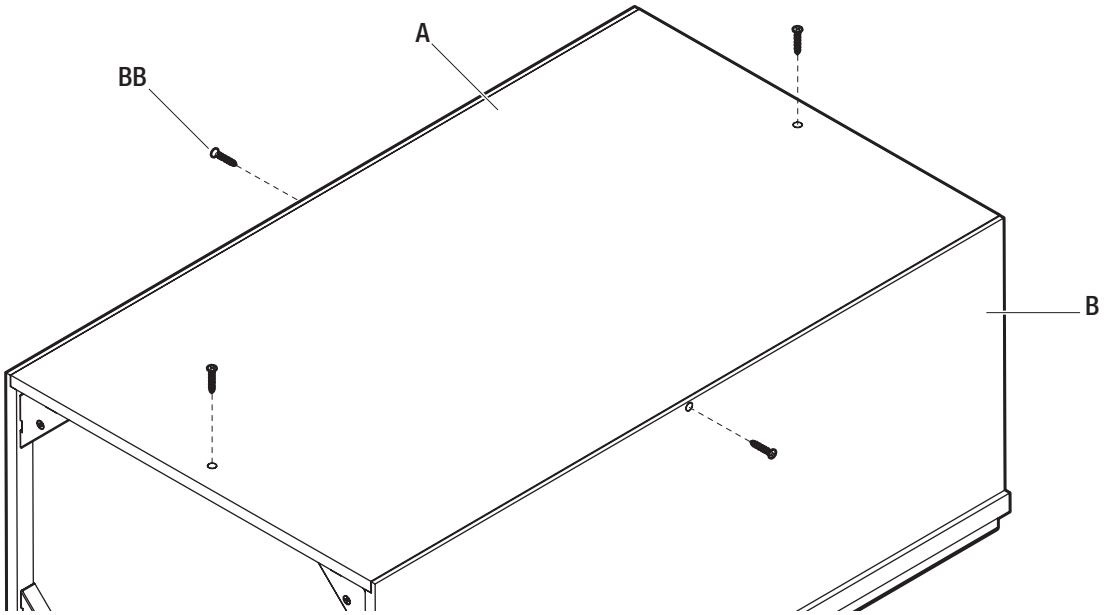

7 Attaching silicone pads

- ☐ Peel and stick two silicone pads (EE) onto the inside corners of each door.

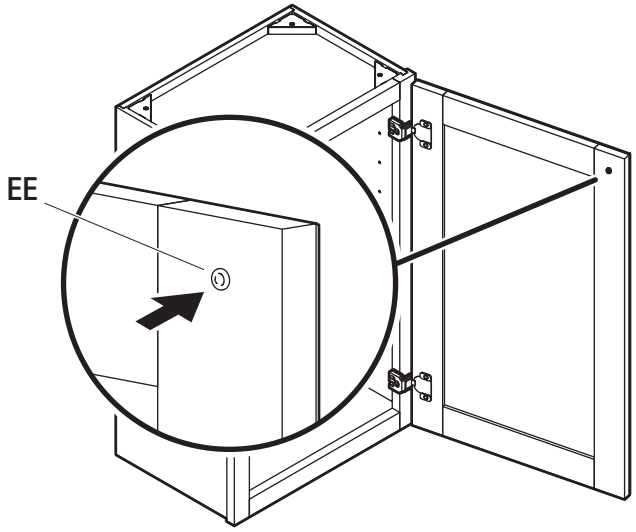

8 (OPTIONAL) Reversing the door position

- ☐ You can remove and reposition the door to the other side of the face frame at any time using the pre-drilled holes. For pre-drilled holes that are not used, you can cover them up using a wax pencil or touch-up paint pen.

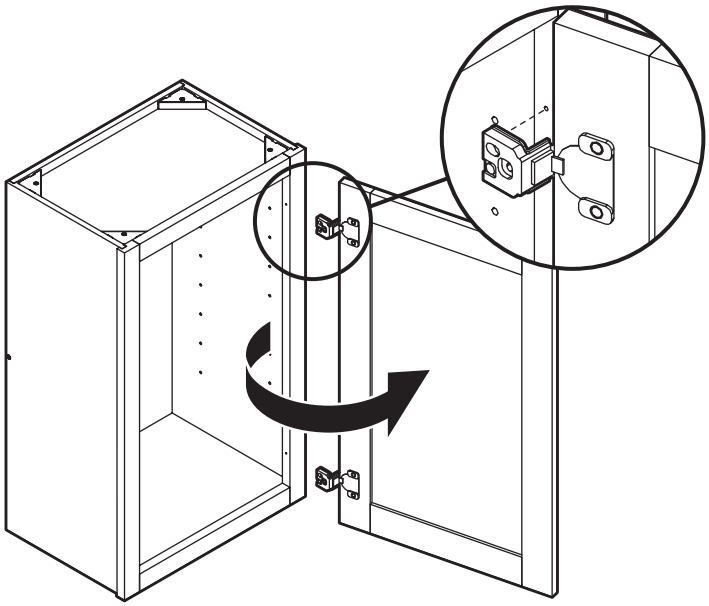

9 (OPTIONAL) Adjusting the door

- Door hinges are 6-way adjustable.
- Up or down adjustment – Loosen screw 1, align the door, and tighten screw 1.

NOTE: It is critical that you do NOT overtighten screw 1.

- Left or right adjustment – Turn screw 2 clockwise or counterclockwise.
- In or out adjustment – Turn screw 3 clockwise or counterclockwise.

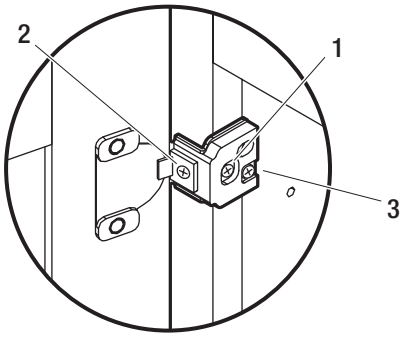

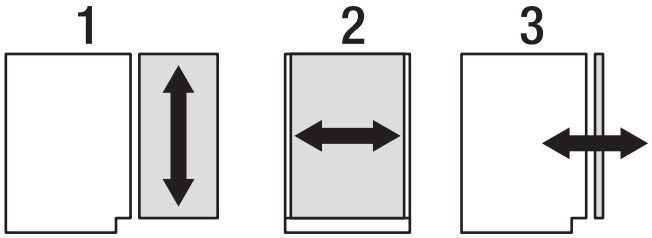

10 Installing the shelves

- Place the shelf pins (DD) inside the assembly at the desired locations using the pre-drilled holes.
- Tilt the shelves (E) to fit inside the face frame and snap over the shelf pins (DD).
- To remove the shelves, push the tabs (1) on the shelf pins and lift the shelf.

NOTE: Do not install shelves until the cabinet assembly has been fully installed.

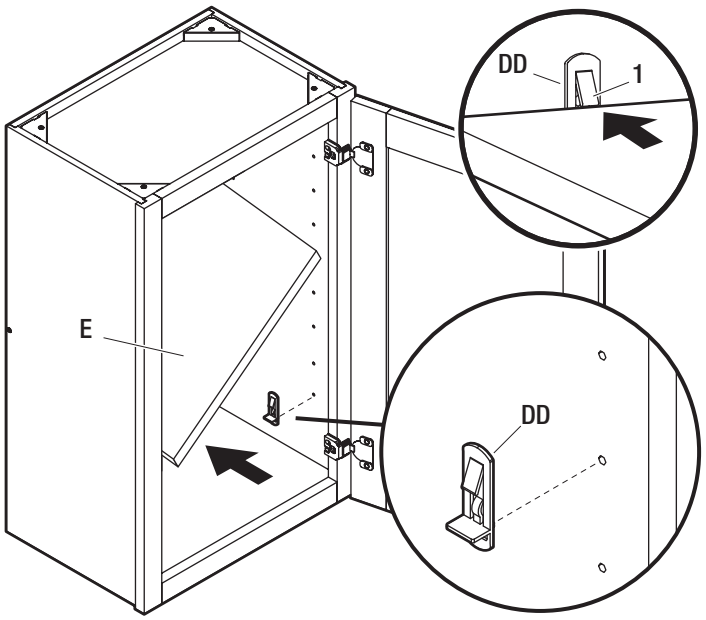

Care and Cleaning

- For normal spills, a damp cloth is sufficient. Dry the surface immediately.
- Doors can be cleaned with most general purpose household cleaners.
- Do not use caustic agents and/or abrasive scrubbers, or oven cleaners.
- Cabinets can be cleaned with a damp sponge or cloth using soapy water, or most general purpose household cleaners. Do not use any abrasive cleaner or scrubbers.
- Do not allow liquids to remain on the surfaces for long periods of time.

HAMPTON BAY®

Questions, problems, missing parts? Before returning to the store,
call Hampton Bay Customer Service
8 a.m. – 7 p.m., EST, Monday – Friday, 9 a.m. – 6 p.m., EST, Saturday

1-855-HD-HAMPTON

HAMPTONBAY.COM

Retain this manual for future use.