StyleWell™

Item # 1004254901
Model # ST1808296-NBLK

USE AND CARE GUIDE

1 PK NATURAL WOVEN COUNTER STOOL

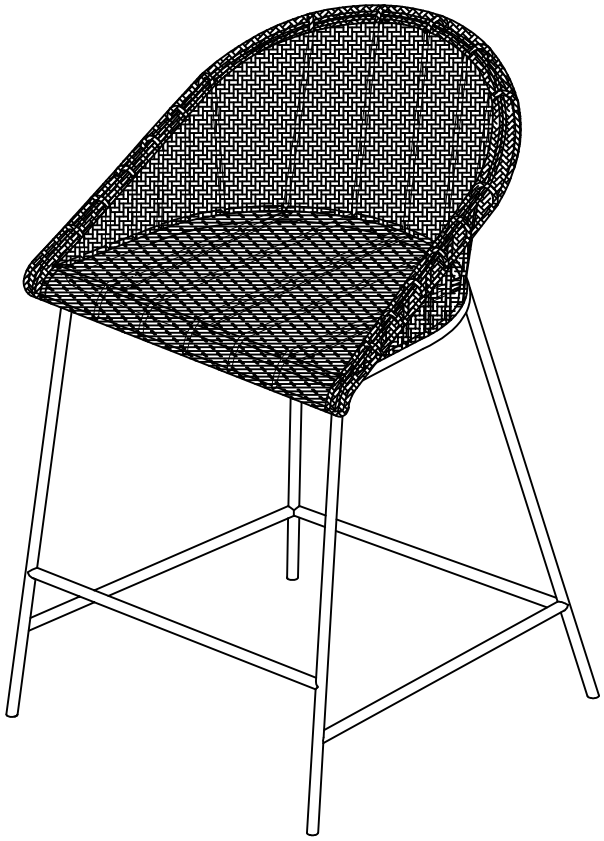

Questions, problems, missing parts?
Before returning to the store, call Customer Service.
8 a.m. – 7 p.m., EST, Monday – Friday, 9 a.m. – 6 p.m., EST, Saturday

1-877-527-0313

HOMEDEPOT.COM

THANK YOU

We appreciate the trust and confidence you have placed in StyleWell through the purchase of this Natural Woven Counter Stool. We strive to continually create quality products designed to enhance your home. Visit us online to see our full line of products available for your home improvement needs. Thank you for choosing Stylewell!

Table of Contents

Table of Contents 2
Safety Information 2
Warranty 2
1 Year Warranty 2
What is Covered 2
What is Not Covered 2
Pre-assembly 3
Planning assembly 3
Hardware Included 3
Package Contents 4
Assembly 5
Maintenance 6
Care and Cleaning 6

Safety Information

DANGER

- Keep children and animals away from the work area. Small parts can choke them if they are swallowed.
- Read and follow instructions carefully.

WARNING

- Read these instructions carefully and keep in a safe place.
- TO GUARANTEE THE SAFE USE OF THIS PRODUCT, FOLLOW THE WARNINGS, GUIDELINES AND RECOMMENDATIONS IN THIS MANUAL.
- Adult assembly required.
- Small parts may present choking hazard prior to assembly.
- Do not stand or put weight on the product during assembly, as doing so can cause damage.

CAUTION

- Do not use power tools to assemble your furniture. Power tools may strip or damage parts/product.
- Do not overtighten connectors (screws, bolts, etc.). Overtightening can lead to product damage.
- Be sure to check all packing materials carefully for small parts that may have come loose inside the carton during shipment. If parts are missing, contact THE HOME DEPOT to obtain any missing parts.
- DO NOT USE SUBSTITUTE PARTS.
- This product should only be used on a flat, level surface.
- Product is designed to hold [222lbs]. Exceeding this limit may damage the product or cause injury to the user.
- Assemble the item as close to its final position (in the same room) as possible.
- Assemble on a soft level surface to avoid damaging the unit or your floor.

Warranty

1 YEAR WARRANTY

WHAT IS COVERED

We guarantee this product to be free of manufacturing defects to the original purchaser for one year.

WHAT IS NOT COVERED

This warranty does not cover commercial use, acts of nature, and abusive use.

Pre-assembly

PLANNING ASSEMBLY

- Once the packaging has been removed, please inspect your new furniture.
- Please read all instructions before beginning assembly. When assembling, utilize the line drawings to locate the parts correctly.
- Please note this unit could be dangerous if incorrectly assembled.
- Unpack on a protective surface.
- Save all packing materials until assembly is complete.
- Ensure that all parts are present before starting to assemble.

TOOLS REQUIRED

Safety goggles

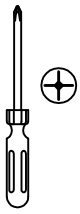

Phillips screwdriver

Level

HARDWARE INCLUDED

NOTE: Hardware not shown to actual size.

_____AA

_____BB

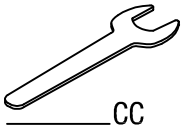

_____CC

Part	Description	Quantity
AA	Bolt	4
BB	Washer	4
CC	Spanner	1

Pre-assembly (continued)

PACKAGE CONTENTS

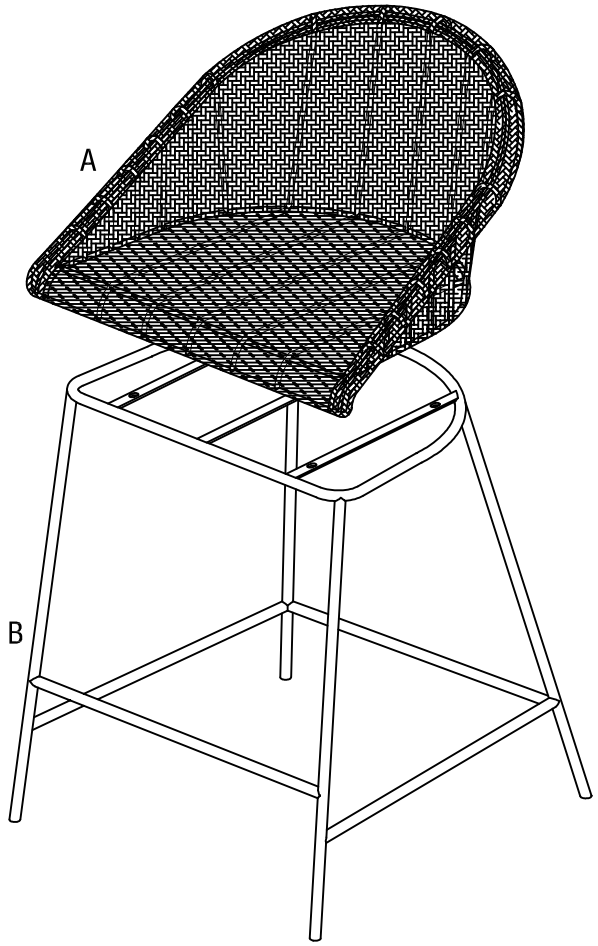

Part	Description	Quantity
A	Seat	1
B	Leg frame	1

Assembly

1 Attaching the seat frame to the leg.

- Put the Seat (A) into the Leg frame (B).

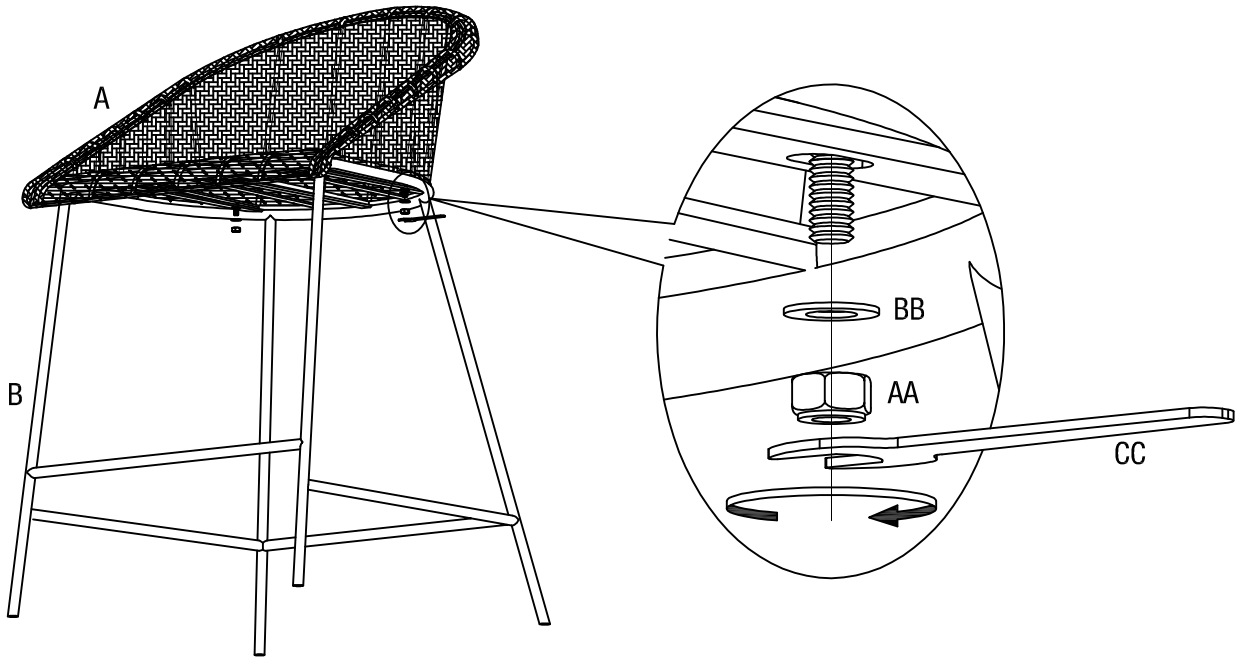

Maintenance

- Please periodically check all parts and re-tighten as necessary.
- Do not use this product if parts are missing, damaged or worn.

Care and Cleaning

- To clean your item, please use a damp cloth and wipe clean.
- Never allow any kind of liquid to remain on your funiture. Absorption can cause wood to warp or finishes to de-laminate.
- Please do not drag and pull your furniture.
- To clean your items, please use a vacuum or slightly brush clean.
- Please do not place hot item (e.g. hot drinks) directly on the surfaces. Please make sure you use a placement or coaster.
- Wipe occasionally with a soft cloth slightly dampened with water. Then buff with a dry clean soft cloth.

StyleWell™

Questions, problems, missing parts?
Before returning to the store, call Customer Service.
8 a.m. – 7 p.m., EST, Monday – Friday, 9 a.m. – 6 p.m., EST, Saturday

1-877-527-0313

HOMEDEPOT.COM

Retain this manual for future use.