SUPER HIGH EFFICIENCY CONDENSING TANKLESS WATER HEATER

USE AND CARE MANUAL

With Installation Instructions for the Installer

Condensing Direct Vent
199,900 Btu/hr, 180,000 Btu/hr, 157,000 Btu/hr and 120,000 Btu/hr Models

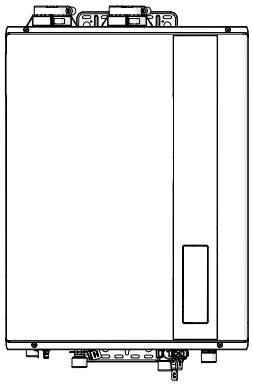

C US

DESIGN CERTIFIED

CERTIFIED

AHRI CERTIFIED® www.ahridirectory.org

ULTRA Low NOx Emissions SCAQMD Rule 1146.2

⚠WARNING:

If the information in these instructions is not followed exactly, a fire or explosion may result, causing death, personal injury, or property damage.

⚠For Your Safety!

- **Do not store or use gasoline or other flammable vapors and liquids in the vicinity of this or any other appliance. To do so may result in an explosion or fire.**
- **Installation and service must be performed by a qualified installer, service agency, or the gas supplier.**

What to Do If You Smell Gas

- **Do not try to light any appliance.**
- **Do not touch any electrical switch; do not use any phone in your building.**
- **Immediately call your gas supplier from a neighbor's phone. Follow the gas supplier's instructions.**
- **If you cannot reach your gas supplier, call the fire department.**
- **Do not return to your home until authorized by the gas supplier or fire department.**

Do not destroy this manual. Please read carefully and keep in a safe place for future reference.

Print 2D Bar Code Here

AP21820 Rev 03

CONTENTS

Safety

Important Safety Information
Safety Precautions ..... 2 – 8

Product Information
Product Information 8
Specifications 9, 10
Flow Rate vs Pressure Drop 11
General Descriptions 12, 13

Installation Instructions
Standards Compliance 15
Choosing a Location 15, 16
Product Inspection 17
Water Heater Installation ..... 17 – 19
Venting & High-Altitude Adjustments ..... 20 – 36
Water Quality/Supply ..... 37 – 41
Condensate 41
Gas Supply ..... 42 – 47
Electrical Wiring 47, 48
Insulation Blankets and Installation Precautions 49
Installation Checklist 50

Using Your Water Heater
Activating the Water Heater 51, 52
Setting the Water Temperature ..... 53 – 56
WiFi Setup 56
Recirculation Pump Control ..... 57 – 62
Water Saving Control Option 63, 64

Caring for Your Water Heater
Water Heater Inspections 65, 66
Care and Cleaning 67, 68
Preventive Maintenance 69
Draining the Water Heater ..... 70 – 72
Freeze Protection 72
Vacation and Extended Shutdown 73
Troubleshooting Chart 73, 74
Service Error Code Chart 75, 76
Call for Assistance 76
Maintenance Notice 77, 78
Parts Replacement 79
Warranty Information 80, 81

IMPORTANT SAFETY INFORMATION

READ THE SAFETY INFORMATION

Your safety and the safety of others are very important. There are many important safety messages in this manual and on your appliance. Always read and obey all safety messages.

This is the safety alert symbol. Recognize this symbol as an indication of Important Safety Information! This symbol alerts you to potential hazards that can kill or hurt you and others.

All safety messages will follow the safety alert symbol and either the word "DANGER," "WARNING," "CAUTION," or "NOTICE."

These words mean:

⚠DANGER: **An imminently hazardous situation that will result in death or serious injury.**

⚠WARNING: **A potentially hazardous situation that can result in death or serious injury and/or damage to property.**

⚠CAUTION: **A potentially hazardous situation that may result in minor or moderate injury.**

NOTICE: **Attention is called to observe a specified procedure or maintain a specific condition.**

⚠WARNINGS:

- **Improper installation, adjustment, alteration, service, or maintenance can cause death, personal injury, or property damage. Follow the instructions in this manual.**

READ ALL INSTRUCTIONS BEFORE USING.

Be sure to read and understand the entire Use and Care Manual before attempting to install or operate this water heater. It may save you time and money. Pay particular attention to the Safety Instructions. Failure to follow these warnings could result in death or serious bodily injury. Should you have problems understanding the instructions in this manual, or have any questions, STOP and get help from a qualified service technician or the local gas utility.

Water Heater Venting Safety

⚠DANGER:

- **Failure to install and properly vent the water heater to the outdoors as outlined in the "Venting" section of the Installation Instructions in this manual will result in death from fire, explosion, or asphyxiation from carbon monoxide. NEVER operate this water heater unless it is properly vented and has the air supply piping properly installed and terminated to the outdoors.**
- **Be sure to inspect the vent terminal, the air intake, and the vent system on the water heater for proper installation at initial start-up and at least annually thereafter. Refer to the *"Care and Cleaning"* section of this manual for more information regarding vent system inspection.**

⚠WARNINGS:

- **Gasoline and other flammable liquids, materials, and vapors (including paint thinners, solvents, and adhesives) are extremely dangerous. DO NOT handle, use, or store gasoline or other flammable or combustible materials anywhere in the vicinity of a water heater or any other appliance. Be sure to read and follow the labels on the water heater, as well as the warnings printed in this manual. Failure to do so can result in death, bodily injury, or property damage.**
- **Combustible construction refers to adjacent walls and ceilings and should not be confused with combustible or flammable products and materials. Combustible materials, such as clothing, cleaning materials, or flammable liquids, should never be stored in the vicinity of this or any gas appliance. Fire or explosion can occur causing death, personal injury, and/or property damage. See page 16 for clearances to combustible materials.**
- **Follow vent manufacturer's instructions for venting installation, including additional clearances from combustibles, to avoid conditions that can lead to death, personal injury, and/or property damage.**
- **Use tankless water heater manufacturer-approved Schedule 40 PVC (foam core is not permitted at any time), Schedule 80 PVC, CPVC, ABS, UL 1738-listed Category III Stainless Steel, or InnoFlue® PP. No other vent material is permitted. For Canada, installations must follow ULC S636 for exhaust venting.**
- **Moisture in the flue gas will condense as it leaves the vent terminal. In cold weather this condensate can freeze on the exterior wall, under the eaves, and on surrounding objects. Some discoloration to the exterior of the building is to be expected. However, improper location or installation may result in severe damage to the structure or exterior finish of the building.**
- **For multiple-unit installation, a minimum distance between vent terminations must be maintained to prevent recirculation of vent gases. See page 26 & 27 for information on venting and clearances to multiple terminations.**

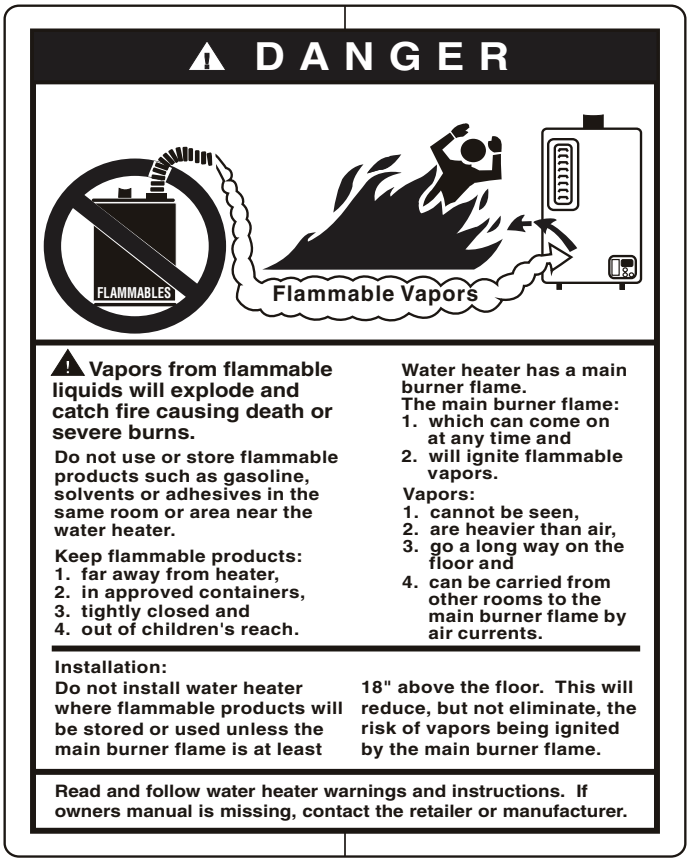

⚠CAUTIONS:

- **Ensure that the appliance vent is securely glued and attached to the vent connection on the top of the water heater. DO NOT USE SCREWS.**
- **DO NOT operate without the condensate drain connected and routed to a proper drain.**

IMPORTANT SAFETY INFORMATION

Water Supply Safety

⚠DANGERS:

- **WATER TEMPERATURE SETTINGS – Safety and energy conservation are factors to be considered when selecting the water temperature setting of a water heater's remote control. Water temperatures above 125°F (52°C) can cause death or severe burns from scalding. Be sure to read and follow the warnings outlined on the pictured label.**
- **There is a hot water scald potential if the water temperature is set too high. Households with small children, the disabled, or elderly persons may require a 120°F (49°C) or lower temperature setting to prevent contact with "HOT" water.**
- **Before manually operating the relief valve, make certain no one will be exposed to the danger of the hot water released by the valve. The water may be hot enough to create a scald hazard. The water should be released into a suitable drain to prevent injury or property damage.**
- **Failure to perform the recommended Routine Preventive Maintenance can harm the proper operation of this water heater, which can cause carbon monoxide dangers, excessive hot water temperatures, and other potentially hazardous conditions.**



⚠CAUTIONS:

- **This water heater must only be used with the following water supply system conditions:**
- **– With clean, potable water free of corrosive chemicals, sand, dirt, or other contaminants.**
- **– With inlet water temperatures above 32°F (0°C), but not exceeding 120°F (49°C).**
- **– DO NOT reverse the hot and cold water connections. The water heater will not operate.**
- **Even when drained properly, a small amount of water will remain in the water heater. In cold weather conditions, this water can freeze. If this happens, allow the defrost protection on the heater at least 30 minutes to melt the frozen water or the water heater may not work properly.**

NOTICE:

The factory setting allows operating temperatures between 100°F (38°C) and 120°F (49°C). Temperatures up to 140°F (60°C) can be achieved with the remote control. Only qualified service personnel should perform this adjustment. Only factory-authorized remote control(s) should be used.

⚠WARNINGS:

- **IMPORTANT: DO NOT apply heat to the HOT or COLD water connections. If sweat connections are used, sweat tubing to adapter before fitting adapter to the water connections on heater. Any heat applied to the water supply fittings will permanently damage the internal components of the water heater.**
- **In case the pipe insulation is not rated for the appropriate weather conditions, install electric heat tracing or equivalent to prevent freezing of the pipes. DO NOT insulate or block the drain valve on the hot outlet fitting. If the pipes are allowed to freeze, the water heater and the pipes may malfunction or leak due to freezing water.**
- **Failure to drain the water heater as described on "Draining the Water Heater" can cause serious personal injuries from scalding and/or damage the water heater.**

Time/Temperature Relationship in Scalds

Water Temperature	Time to Produce a Serious Burn
120°F (49°C)	More than 5 minutes
125°F (52°C)	1 1/2 to 2 minutes
130°F (54°C)	About 30 seconds
135°F (57°C)	About 10 seconds
140°F (60°C)	Less than 5 seconds
145°F (63°C)	Less than 3 seconds
150°F (66°C)	About 1 1/2 seconds
155°F (68°C)	About 1 second

Table courtesy of Shriners Burn Institute

Temperature Conversion Chart °F/°C

100	102	104	106	108	110	112	114	116	118	120	125	130	140	°F
38	39	40	41	42	43	44	46	47	48	49	52	54	60	°C

Natural Gas and Liquefied Petroleum Safety

⚠DANGERS:

- **Never attempt to convert the water heater from natural gas to LP or vice versa. The water heater must only use the fuel type in accordance with the listing on the data plate—natural gas for natural gas units and LP for LP units. Any other fuel usage will result in death or serious personal injury from fire and/or explosion. This water heater is not certified for any other fuel type.**
- **Both natural gas and propane (LP) have an odorant added to aid in detecting a gas leak. Some people may not physically be able to smell or recognize this odorant. If you are unsure or unfamiliar with the smell of natural gas or LP, ask the gas supplier. Other conditions, such as "odorant fade," which causes the odorant to diminish in intensity, can also hide or camouflage a gas leak.**
- **Water heaters using LP gas are different from natural gas models. A natural gas water heater will not function safely on LP and vice versa.**
- **LP must be used with great caution. It is heavier than air and will collect first in lower areas, making it hard to detect at nose level.**
- **Before attempting to light the water heater, make sure to look and smell for gas leaks. Use a soapy solution to check all gas fittings and connections. Bubbling at a connection indicates a leak that must be corrected. When smelling to detect a gas leak, be sure to also sniff near the floor.**
- **Gas detectors are recommended in LP and natural gas applications and their installation should be in accordance with the detector manufacturer's recommendations and/or local laws, rules, regulations, or customs.**
- **Combustible materials, such as clothing, solvents, cleaning materials, or flammable liquids, must not be placed in the vicinity of the water heater.**
- **If a gas leak is present or suspected:**

– DO NOT attempt to find the cause yourself.

– Never use an open flame to test for gas leaks. The gas can ignite resulting in death, personal injury, or property damage.

– Follow the steps listed under "What to Do If You Smell Gas" found on the front cover of this manual.

⚠WARNINGS:

- **The installation of gas piping must comply with local utility company requirements and/or in the absence of local codes, use the latest edition of National Fuel Gas Code (NFGC), ANSI Z223.1/NFPA 54, or CAN/CSA B149.1, Natural Gas and Propane Installation Code.**
- **If inlet gas pressure is out of allowable range [4.0" w.c. (1.0kPa) – 10.5" w.c. (2.6kPa)] for Natural Gas, or [8.0" w.c. (2.0kPa) – 13.0" w.c. (3.2kPa)] for LP gas, a gas pressure regulator must be installed to maintain the allowable inlet gas pressure.**
- **Should overheating occur or the gas supply fail to shut off, turn off the manual gas control valve to the water heater.**

⚠CAUTIONS:

- **DO NOT attempt the repair of any electrical wiring, gas piping, remote control, burners, vent connectors, or other safety devices. Refer repairs to qualified service personnel.**
- **Turn off the manual gas shut-off valve if the water heater has been subjected to overheating, fire, flood, physical damage, or if the gas supply fails to shut off.**
- **DO NOT turn on the water heater unless the water and gas supplies are completely opened.**

IMPORTANT SAFETY INFORMATION

Before operating this water heater, be sure to read and follow the instructions on the label pictured below and all other labels on the water heater, as well as the warnings printed in this manual.

Failure to do so can result in unsafe operation of the water heater, resulting in death, personal injury, or property damage. Should you have any problems reading or following the instructions in this manual, STOP and get help from a qualified service technician.

FOR YOUR SAFETY READ BEFORE OPERATING

⚠WARNING : If you do not follow these instructions exactly, a fire or explosion may result causing property damage, personal injury or loss of life.

A.This appliance does not have a pilot. It is equipped with an ignition device which automatically lights the burner. DO NOT try to light the burner by hand.

B.BEFORE OPERATING smell all around the appliance area for gas. Be sure to smell next to the floor because some gas is heavier than air and will settle on the floor.

WHAT TO DO IF YOU SMELL GAS

●DO NOT try to light any appliance. ●DO NOT touch any electric switch; DO NOT use any phone in your building. ●Immediately call your gas supplier from a neighbor's phone. Follow the gas supplier's instructions. ●If you cannot reach your gas supplier, call the fire department. ●DO NOT return to your home until authorized by the gas supplier or fire department.

C.Use only your hand to push in or turn the gas control knob. Never use tools. If the knob will not push in or turn by hand,don't try to repair it, call a qualified service technician. Force or attempted repair may result in a fire or explosion.

D.DO NOT use this appliance if any part has been under water. Immediately call a qualified service technician to inspect the appliance and to replace any part of the control system and any gas control which has been under water.

OPERATING INSTRUCTIONS

1.STOP! Read the safety information above on this label.
2.Turn off all electric power to the appliance.
3.DO NOT attempt to light the burner by hand.
4.Turn the Gas Shutoff Valve located on the outside of the unit clockwise ↷ to the "OFF" position.

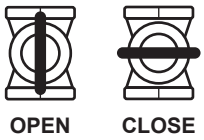

5.Wait five (5) minutes to clear out any gas. If you then smell gas, STOP! Follow "B" in the safety information above on this label. If you don't smell gas, go to the next step.
6.Turn the Gas Shutoff Valve located on the outside of the unit counterclockwise ↶ to the "ON" position.
7.Turn on all electric power to the appliance.
8.If the appliance will not operate, follow the instructions "To Turn Off Gas To Appliance" and call your service technician or gas supplier.

TO TURN OFF GAS TO APPLIANCE

1.Turn off all electric power to the appliance if service is to be performed.
2.Turn the Gas Shutoff Valve located on the outside of the unit clockwise ↷ to the "OFF" position.

IMPORTANT SAFETY INFORMATION

Electrical Safety

⚠DANGER:

- **Shock Hazard – Make sure the electrical power to the water heater is off to avoid electric shock that will result in death or serious personal injury.**

⚠WARNINGS:

- **For your safety, the information in this manual must be followed to minimize the risk of fire, explosion, or electric shock that can result in death, personal injury, and/or property damage.**
- **Field wiring connections and electrical grounding must comply with local codes or, in the absence of local codes, with the latest edition of the National Electrical Code, ANSI/NFPA 70, or in Canada, Canadian Electrical Code, CAN/CSA C22.1, Part 1.**

⚠CAUTIONS:

- **Label all wires prior to disconnecting for service. Wiring errors can cause dangerous and improper operation. Verify correct operation after servicing.**
- **For your safety, burner inspection and cleaning should be performed only by qualified service personnel.**
- **Make certain the power to the water heater is OFF before removing the unit cover panel. Exposed electrical components and moving parts can cause personal injuries.**
- **For your safety, DO NOT attempt the repair of any electrical wiring, gas piping, remote control, burners, vent connectors, or other safety devices. Refer repairs to qualified service personnel.**

FOR INSTALLATIONS IN THE STATE OF CALIFORNIA

California law requires that water heaters must be braced, anchored, or strapped to resist falling or horizontal displacement due to earthquake motions. For water heaters up to 52-gallon capacity, a brochure with generic earthquake bracing instructions can be obtained from: Office of the State Architect, 1102 Q Street, Suite 5100, Sacramento, CA 95814, or you may call 916-445-8100 or ask a water heater dealer.

However, applicable local codes shall govern installation. For residential water heaters of a capacity greater than 52 gallons or tankless-style, consult the local building jurisdiction code for acceptable bracing procedures.

IMPORTANT SAFETY INFORMATION

Safety

General Installation and Maintenance Safety

⚠WARNINGS:

- **This water heater must be installed in accordance with these instructions, local codes, utility company requirements and/or in the absence of local codes, use the latest edition of the American National Standard/National Fuel Gas Code (NFGC), ANSI Z223.1 and National Fire Protection Association, NFPA 54, or in Canada, CAN/CSA B149.1, Natural Gas and Propane Installation Code, and the latest edition of the National Electrical Code, ANSI/NFPA 70, or in Canada, Canadian Electrical Code, CAN/CSA C22.1, Part 1.**
- **For your safety, DO NOT attempt to disassemble this water heater for any reason. Improper adjustments, alterations, service, or maintenance can cause death, personal injury, or property damage.**

SAFETY PRECAUTIONS:

Read this manual entirely before installing and/or operating the water heater.

Use this water heater only for its intended purpose as described in this Use and Care Manual.

Have the installer show you the location of the gas shut-off valve and how to shut it off if necessary. Turn off the manual shut-off valve if the water heater has been subjected to overheating, fire, flood, physical damage, or if the gas supply fails to shut off.

Be sure your water heater is properly installed in accordance with local codes and the provided installation instructions.

DO NOT attempt to repair or replace any part of your water heater unless it is specifically recommended in this manual. All other servicing should be referred to a qualified service technician.

SAVE THESE INSTRUCTIONS

Product Information

PRODUCT INFORMATION

For Your Records

Write down and save the following product information along with the original sales slip and/or cancelled check.The model and serial numbers can be found on the top label on the right side of the water heater.

MODEL NUMBER:

SERIAL NUMBER:

DATE OF INSTALLATION:

INSTALLING COMPANY/PHONE NUMBER:

PLUMBING CONTRACTOR/PHONE NUMBER:

See page 76 for additional service information.

Read This Manual

Inside you will find many helpful hints on how to use and maintain your water heater properly. A little preventive care on your part can save you time and money over the life of your water heater.

You'll find many answers to common problems in the "Troubleshooting Chart" in this Use and Care Manual. Always refer to this chart before calling for service. Referring to this chart before calling may answer your question(s) and eliminate the need for service.

Preoperating Checklist

- ☐ Is the main gas valve to the water heater turned on?
- ☐ Is the fuse in place or is the breaker turned on?
- ☐ Does the water heater's electronic ignition light?
- ☐ Is the water temperature set to a safe temperature?
- ☐ Is the water heater connected to a floor drain?
- ☐ Is the water heater properly vented to the outside?
- ☐ Is the water heater installed in a safe location away from flammable materials and/or freezing conditions?

Specifications – Direct-Vent Models

Front View

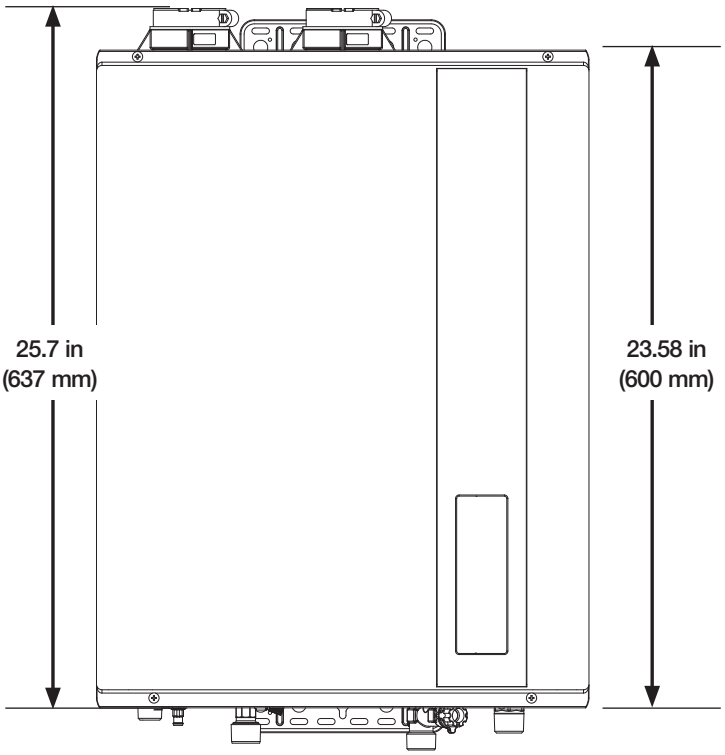

Top View

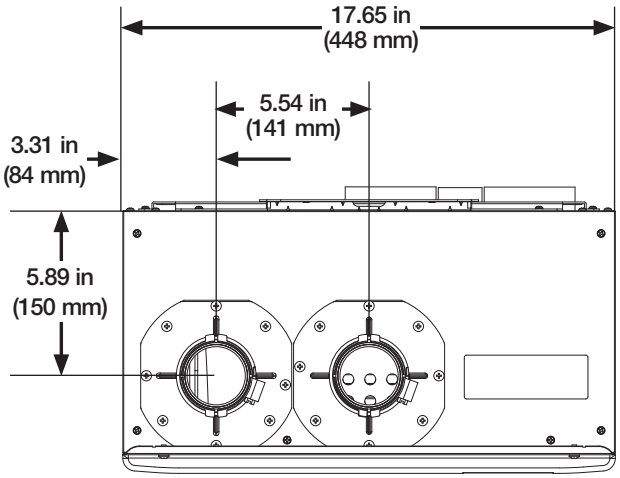

Bottom View

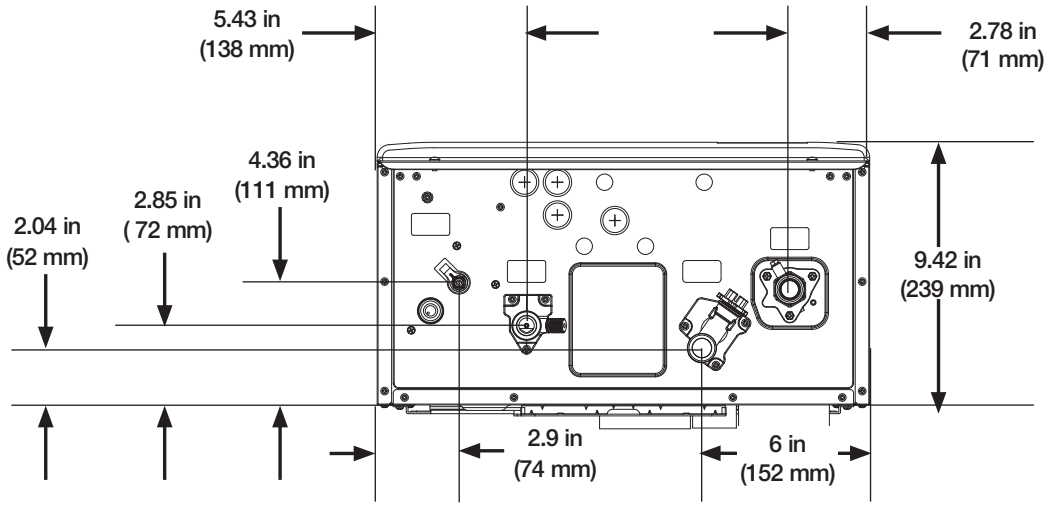

PRODUCT INFORMATION

Specifications

The following product information can be found from the rating label on this water heater.

A. Model Number
B. Serial Number
C. Data Bar Code
D. Heater Type
E. Installation Type
F. Type of Gas
G. Max. Inlet Gas Pressure
H. Min. Inlet Gas Pressure
J. Recovery Rating
K. Max. BTU Input Rating
L. Min. BTU Input Rating
M. Manifold Gas Pressure
N. Certification Stamp
P. Alternate Approval Stamp
Q. Clearances

English Rating Label

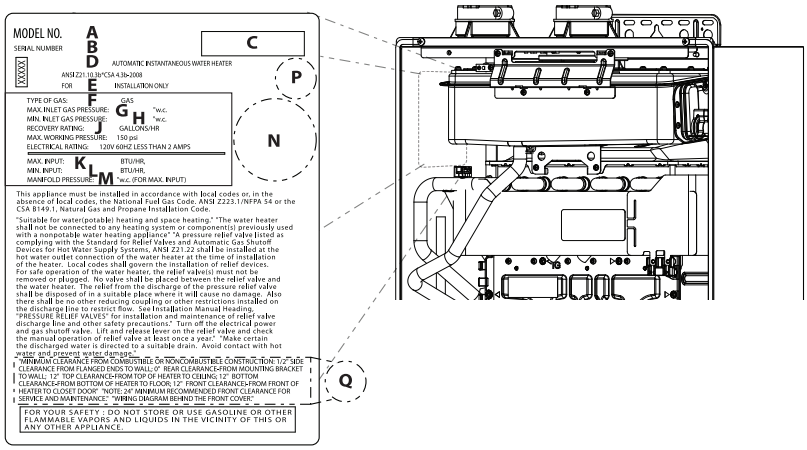

English/French Rating Label

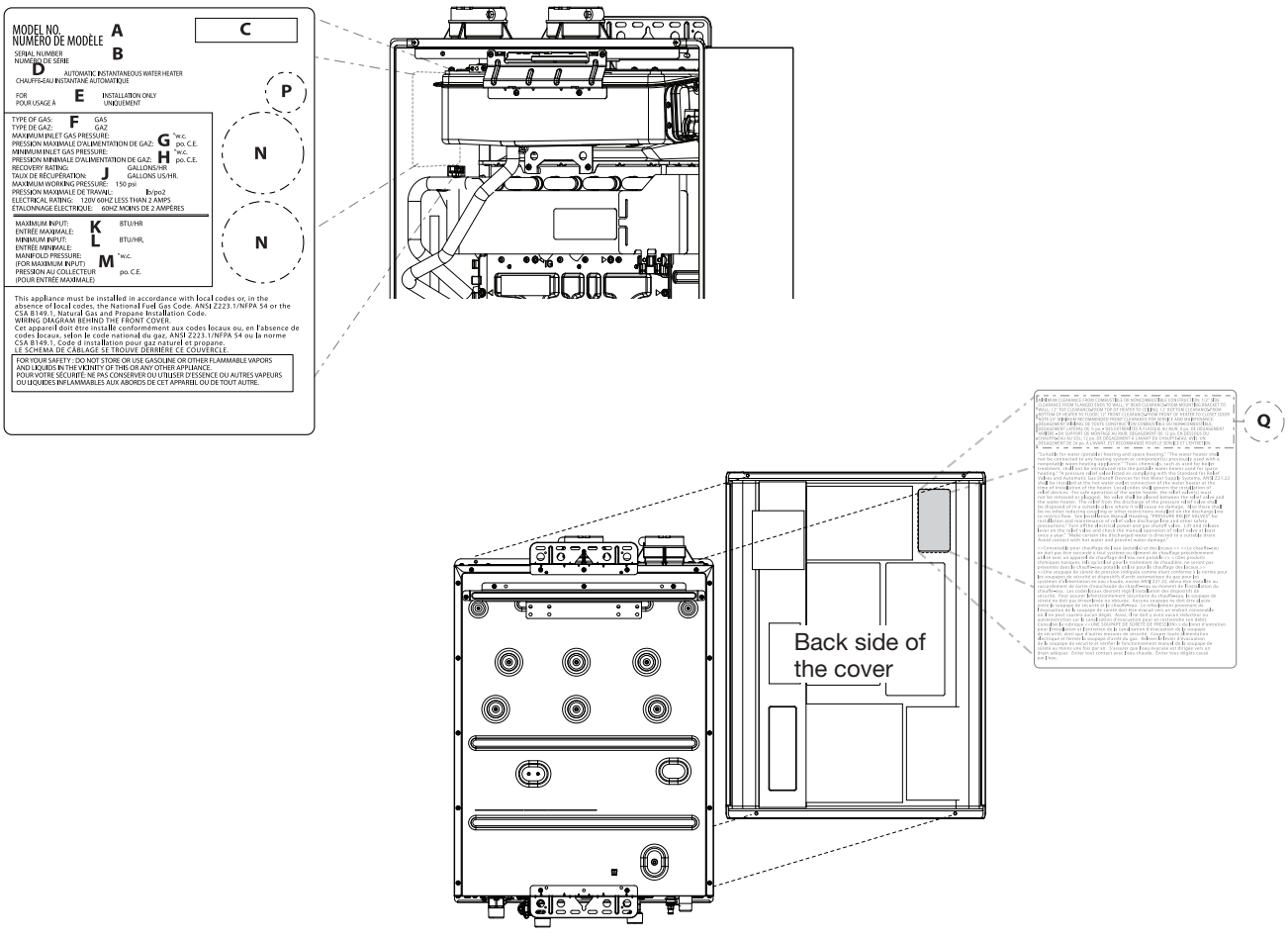

The graphic below illustrates the pressure drop across the water heater. Please ensure ample water supply pressure is available to ensure the best performance.

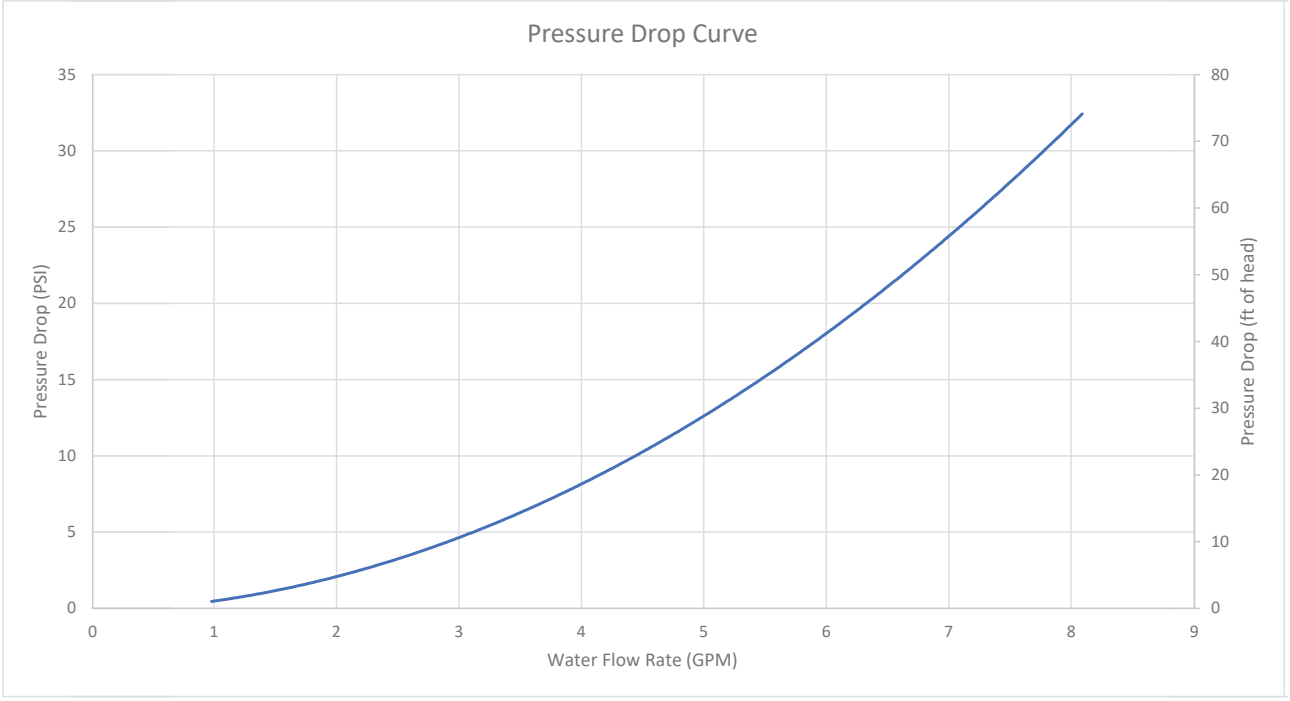

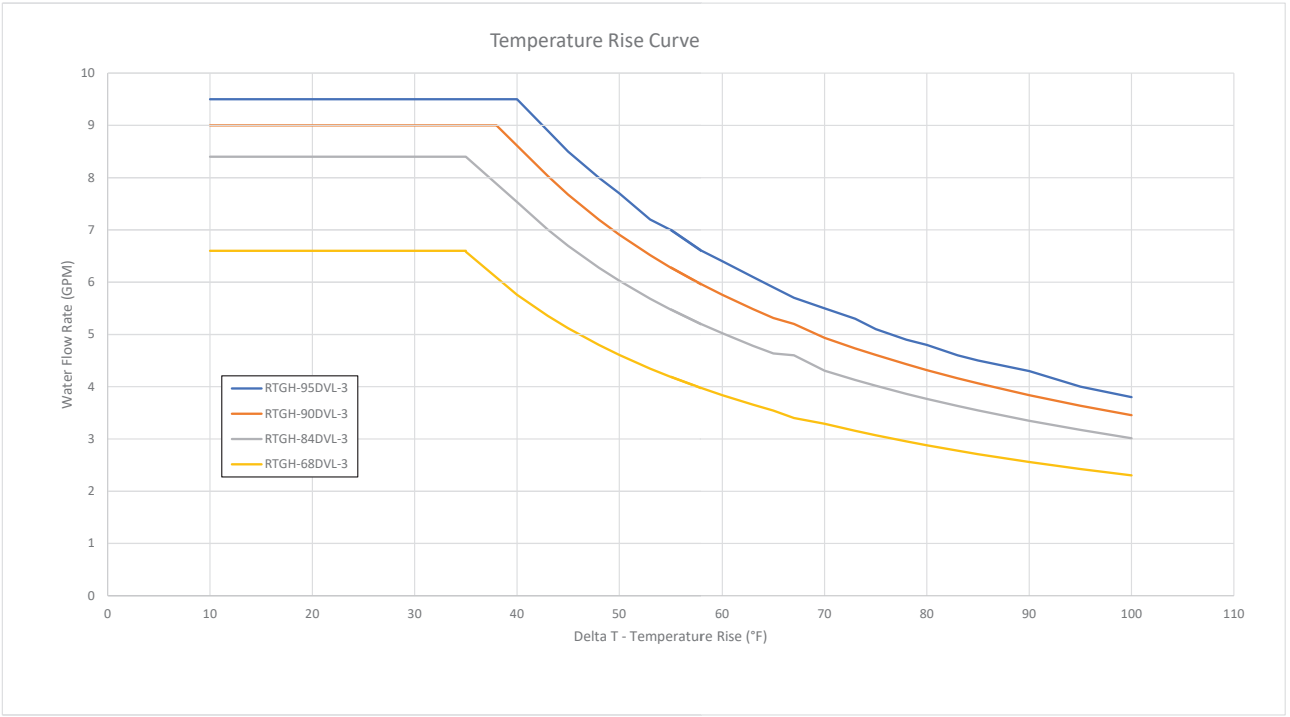

PRODUCT INFORMATION

General Descriptions

Typical Direct-Vent Water Heater (Shown Without Venting)

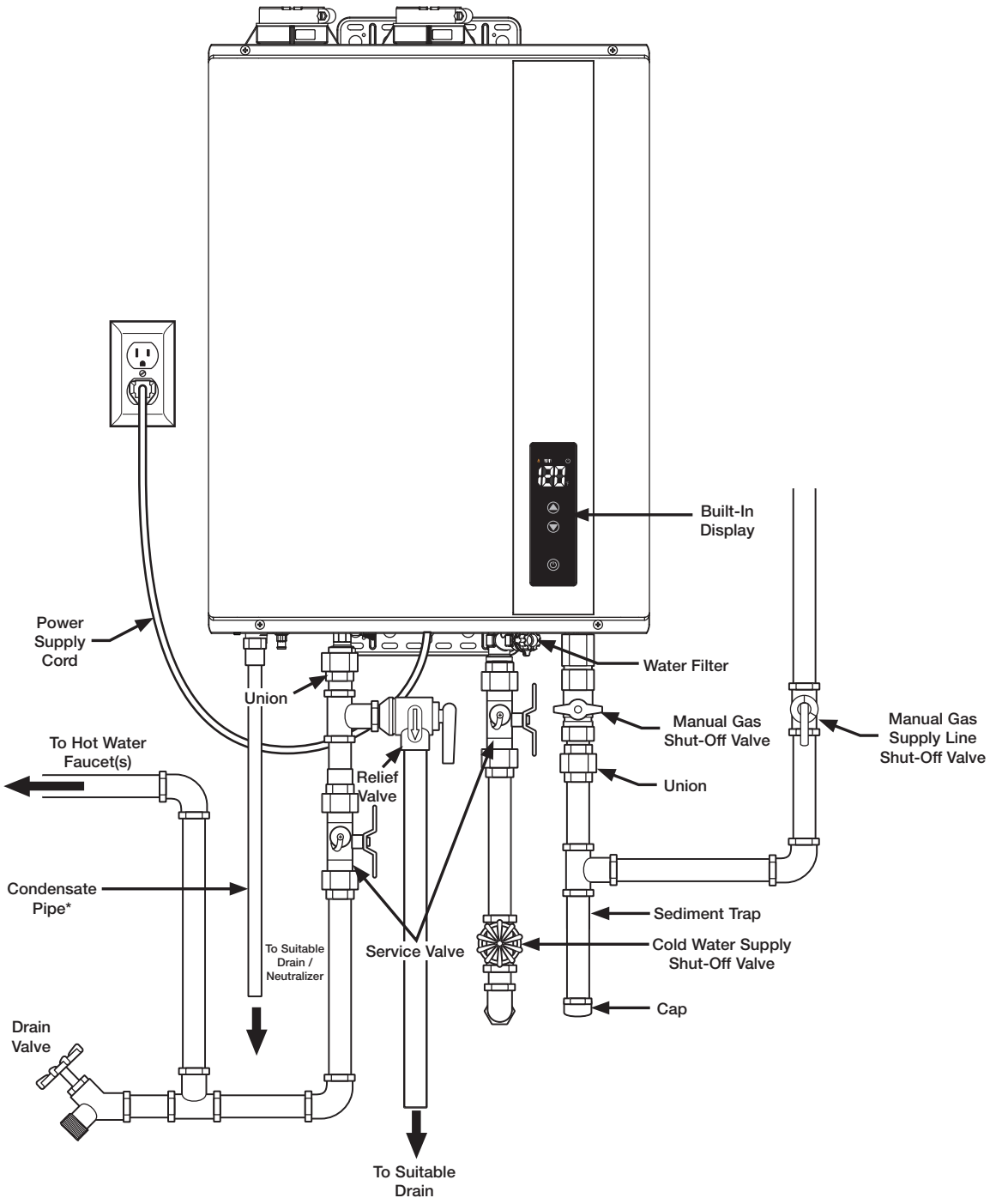

General Descriptions

Typical Outdoor Water Heater
(Outdoor Conversion Kit Required - sold separately)

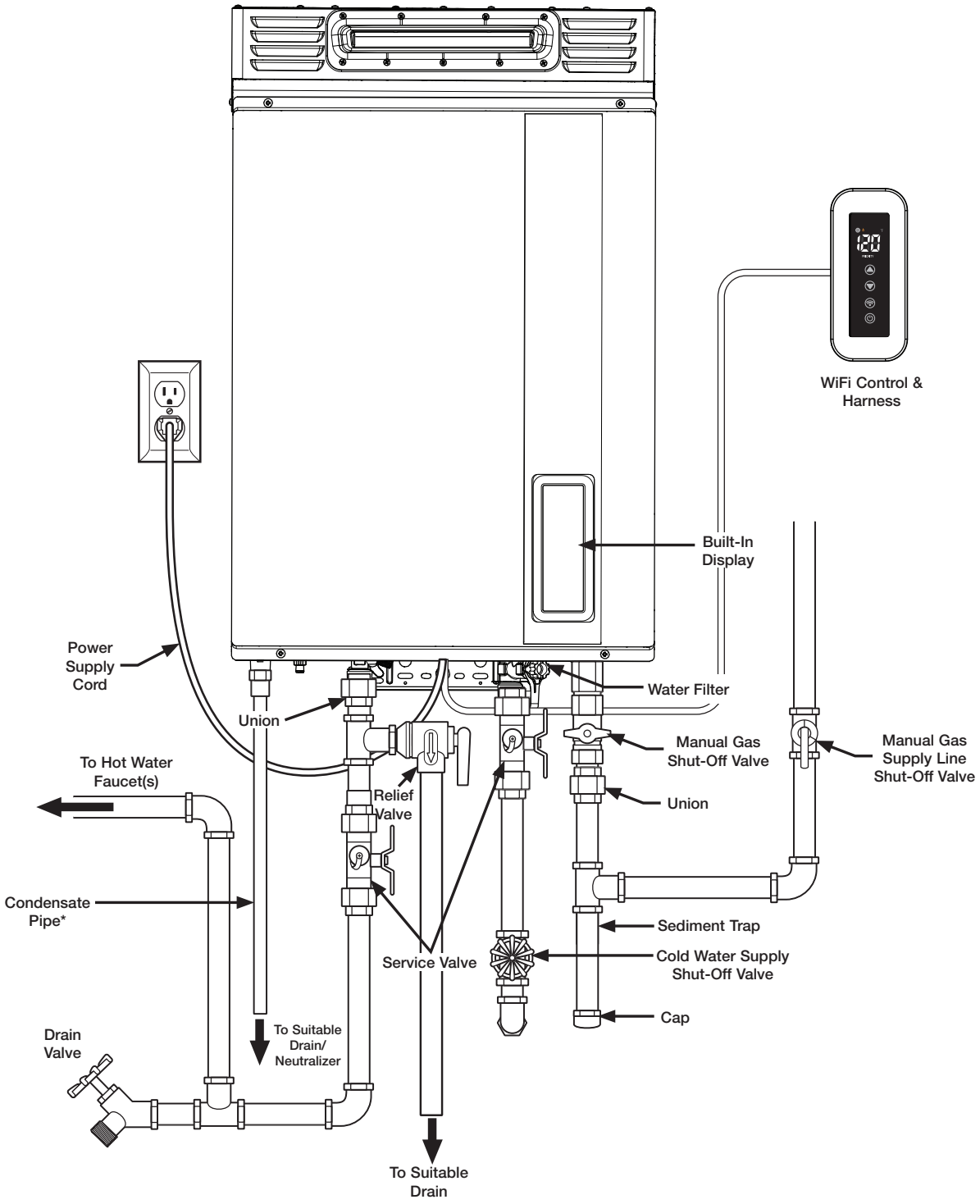

INSTALLATION INSTRUCTIONS

FOR THE CONTRACTOR

Standards Compliance

This water heater must be installed in accordance with these instructions, local codes, and utility company requirements.

In the United States where local codes are not available, use the latest edition of the American National Standard/National Fuel Gas Code. A copy of the Fuel Gas Code can be purchased from either the American Gas Association, 400 North Capitol Street Northwest, Washington, DC 20001, as ANSI standard Z223.1, or National Fire Protection Association, 1 Batterymarch Park, MA 02269 as NFPA 54.

In Canada, use the latest edition of the CAN/CSA B149.1 Natural Gas and Propane Installation Code and the Canadian Electrical Code, CAN/CSA C22.1, Part 1.

A copy can be purchased from; Canadian Standards Association, 5060 Spectrum Way, Mississauga, ON L4W 5N6

Choosing a Location

⚠WARNING:

Fire Hazard –Combustible construction refers to adjacent walls and ceilings and should not be confused with combustible or flammable products and materials. Combustible materials, such as clothing, cleaning materials, or flammable liquids, must not be placed against or next to the water heater. Fire or explosion could occur causing death, personal injury, and/or product or property damage.

A gas-fired water heater should never be installed in a space or room where liquids with flammable vapors are used or stored. Such liquids include gasoline, LP gas (butane or propane), paint, adhesives and their thinners, solvents, or removers. Flammable vapors carry long distances from where they are used or stored. The open flame of the water heater's main burner can ignite these vapors causing an explosion or fire.

NOTICE:

Elevating a gas-fired water heater will reduce but NOT eliminate the possibility of lighting the vapor of flammable liquids which may be improperly stored or accidentally spilled.

NOTICE:

DO NOT connect power until venting installation is complete (see Venting installation).

NOTICE:

This water heater should not be located in an area where water leakage of the heat exchanger or connections will result in damage to the area adjacent to it or to lower floors of the structures. When such areas cannot be avoided, install a suitable catch pan with an adequate drain under the water heater.

The following requirements will ensure a safe installation:

- The water heater must be located in an area where it won't sustain damage from moving vehicles, flooding, etc. If the water heater is installed in a storage garage, the direct ignition system and main burner should be no less than 18 in. (45 cm) above the garage floor.
- If the water heater is installed in a repair garage or in a private garage, the direct ignition system and main burner should be no less than 4.5 ft (1400 mm) above the garage floor.
- The water heater should be installed as close as possible to the vent exhaust and air intake. This minimizes the vent length and the number of elbows and joints required for venting.
- The water heater should be installed with the correct venting and exhaust materials. See "Venting" in this Use and Care Manual.

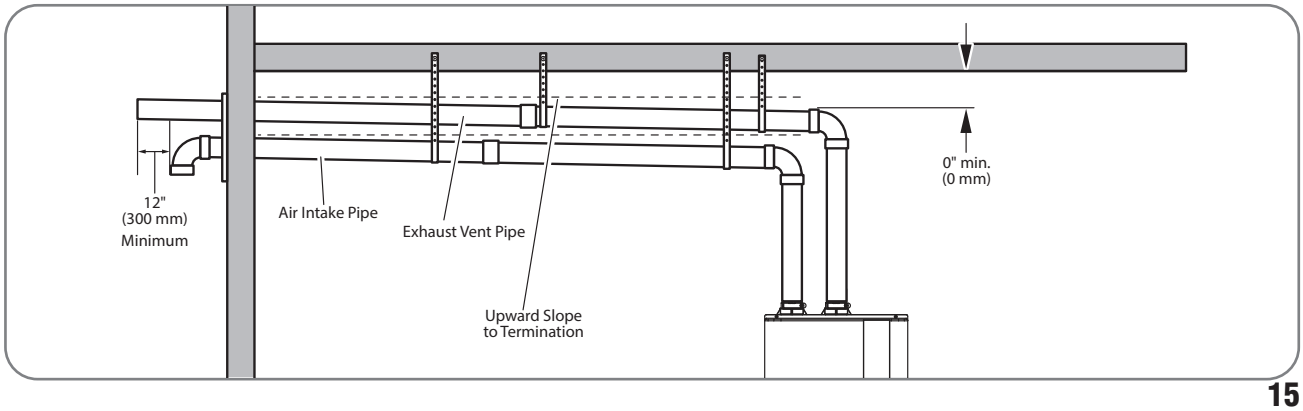

Choosing a Location (cont.)

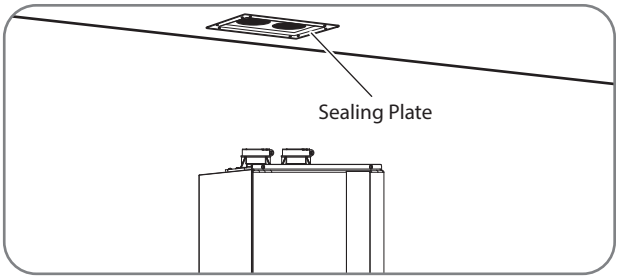

- Every vent or air intake pipe penetration of a floor or ceiling should be sealed.
- Failure to install and properly vent the water heater to the outdoors as outlined on "Venting" can result in unsafe operation.

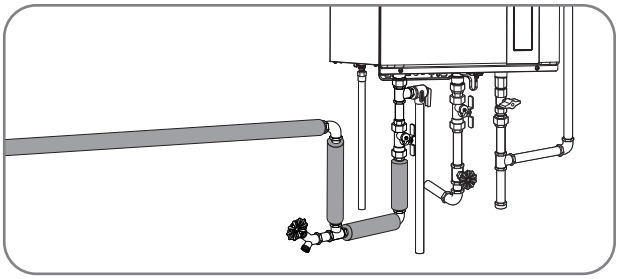

- Long hot water lines should be insulated to conserve water and energy.
- The water heater and water lines should be protected from exposure to freezing temperatures.



- **DO NOT install the water heater in areas prohibited by National Fuel Gas Code in U.S. installation or CAN/CSA B149.1 in Canadian installation.**



- **DO NOT install the water heater where it is subject to vibrations.**



- **DO NOT install the water heater in a recreational vehicle, boat, or other watercraft.**



- **DO NOT install the water heater near vents for heating and cooling unless a minimum clearance of 4 ft (1.2 m) is maintained.**

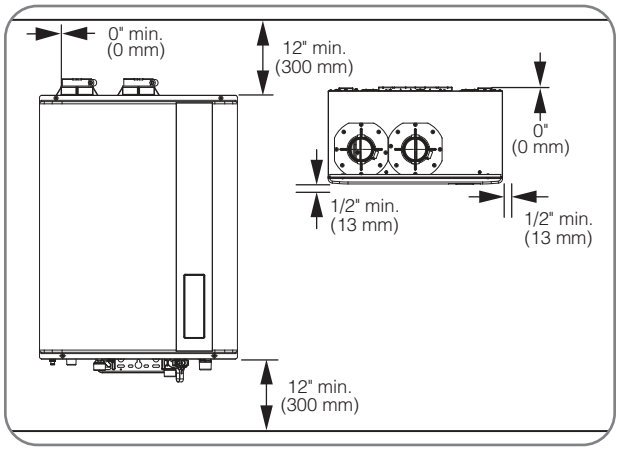

- Minimum water heater clearances from combustible and noncombustible construction are as follows:
  – 1/2 in. (1.3 cm) for sides and front
  – 0 in. (0 cm) for rear with support bracket(s)
  – 12 in. (30 cm) from the bottom and top
  – 0 in. (0 cm) for vent or air intake pipe

NOTICE:

Preferred maintenance clearance is 24 in. (61 cm) from top, bottom, and front of unit.

Product Inspection

Visually inspect the water heater for any possible damage.

Check the rating plate on the water heater to make sure the water heater was designed to be used with the supplied type of gas (natural or LP).

Verify that all included supplied parts are present as shown.

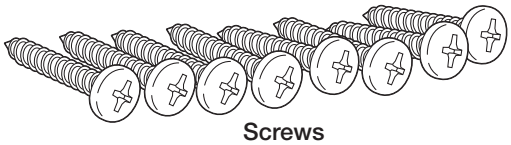

Screws



Washers

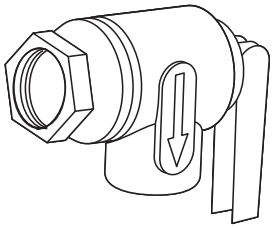

Pressure Relief Valve
(Some models only)

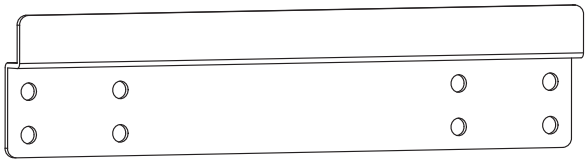

Mounting Bracket

Water Heater Installation

Corrosive Atmosphere

NOTICE:

The water heater should not be installed near an air supply containing halogenated hydrocarbons where contaminants can enter the combustion air supply.

Avoid installing a water heater in any of the following locations: beauty shops, dry-cleaning establishments, photo processing labs, and storage areas for liquid and powdered bleaches or swimming pool chemicals. These locations often contain such halogenated hydrocarbons.

The air supply containing halogenated hydrocarbons is safe to breathe, but when passed through a gas flame, corrosive elements are released that will shorten the life of any gas-burning appliance.

Propellants from common spray cans or gas leaks from A/C and refrigeration equipment are highly corrosive after passing through a flame.

NOTICE:

The water heater warranty is void when the failure is due to operation in corrosive conditions.

INSTALLATION INSTRUCTIONS

Water Heater Installation (cont.)

NOTICE:

The National Fuel Gas Code (NFGC) and CAN/CSA B149.1 mandate a manual gas shut-off valve. See NFGC/B149.1 for complete instructions. Local codes or plumbing authority requirements may vary from the instructions or diagrams provided and take precedence over these instructions.

Typical Installation of Direct-Vent Water Heater

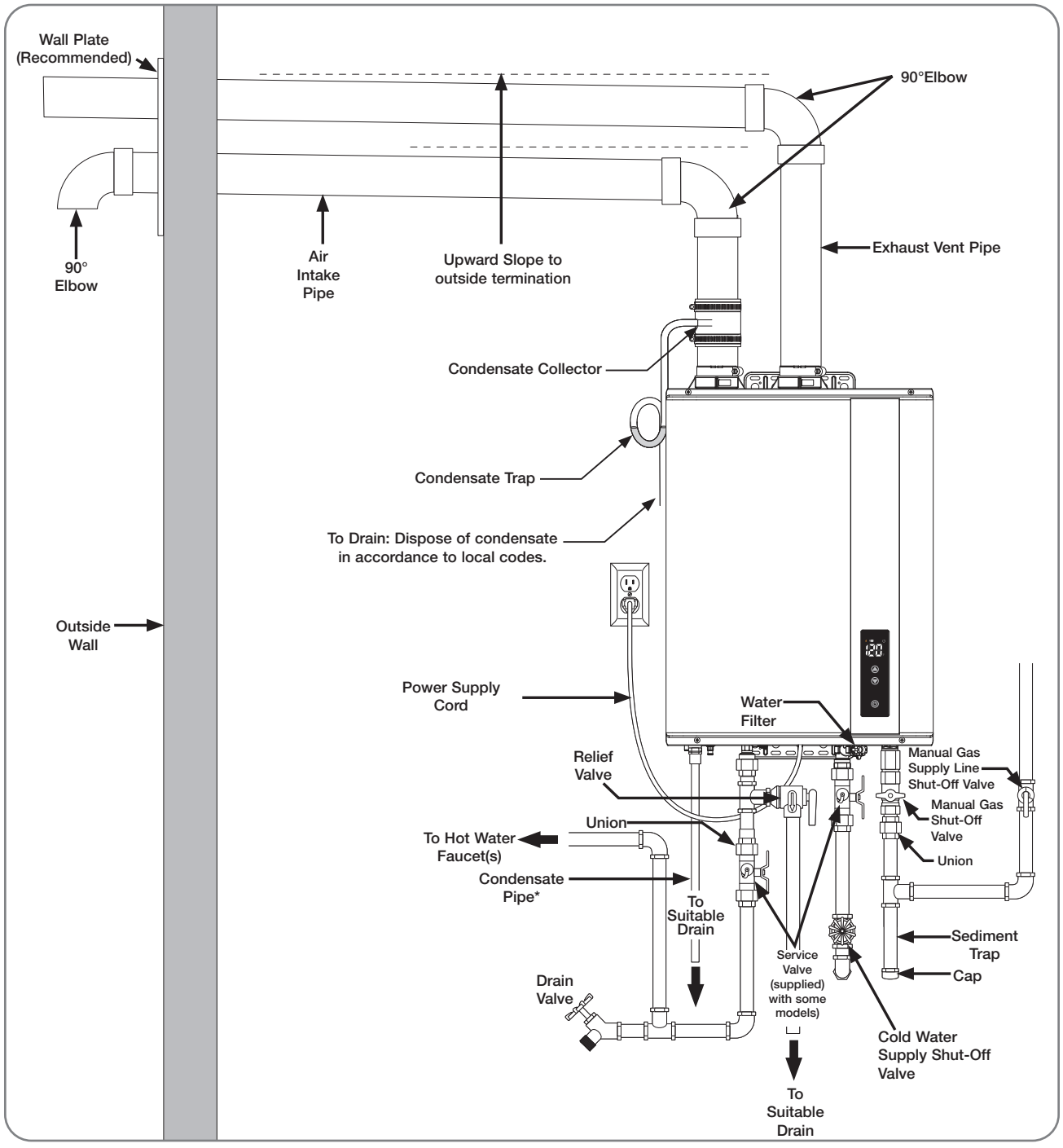

Mounting the Water Heater

⚠CAUTION:

Reinforcement of the wall is required where the wall is not strong enough to hold the water heater. Failure to do so could result in personal injury and/or property damage.

The mounting location for the water heater should allow for easy access and operation.

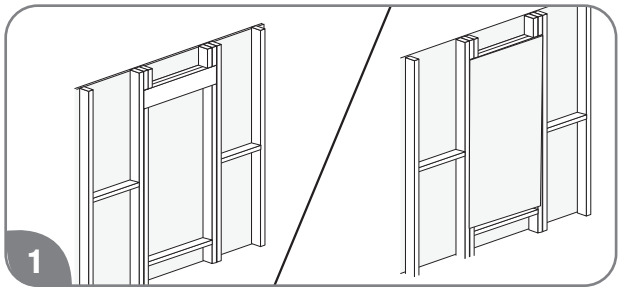

The water heater is designed to be installed either inside the wall cavity, between the wall studs, or outside the wall cavity. Either installation requires the water heater to be supported with a wooden support brace between the wall studs, or a piece of wood that is equal in size to the water heater and securely attached to the wall studs before the water heater is attached to it. This piece of wood can be installed inside or outside of the wall. Use wood screws to secure brackets to wall. If mounting to a concrete wall, use lag bolts designed for concrete.

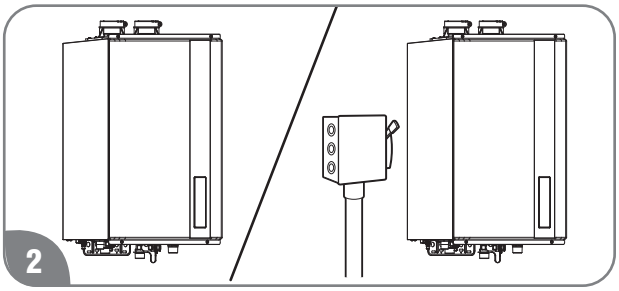

Make sure the proper electrical outlet or supply (120 VAC/60 Hz) is available and located near the unit. Direct-vent models come with a 6-ft. (1.8-m) power cord, while the outdoor models require hard-wiring or the addition of a plug.

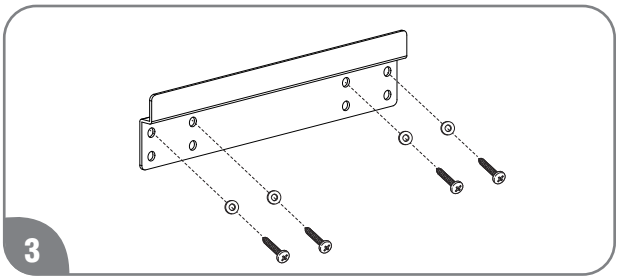

Attach the mounting bracket to the wall and secure it by 4 screws and washers. Make sure it is level and that it can support the weight of the water heater.

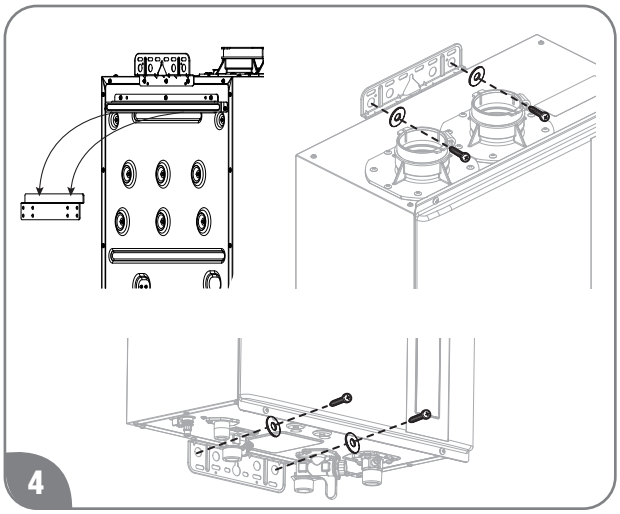

NOTICE:

The image above may differ in appearance from your water heater.

Align the groove on the back of the water heater to the tongue on the mounting bracket. When mounted with the mounting bracket, the water heater will have a 5/8" (16 mm) clearance from the back of the wall. Using two screws and washers , secure the top and lower mounting bracket to the wall.

NOTICE:

DO NOT connect power until venting installation is complete (see Venting installation).

Venting for Direct-Vent Water Heater

⚠DANGER:

Failure to properly vent the water heater to the outdoors as outlined in this Venting section will result in death or serious personal injury. To avoid the risk of fire, explosion, or asphyxiation from carbon monoxide, NEVER operate the water heater unless it is properly vented and has adequate air supply for proper operation as outlined in this Venting section. This water heater must have air supply connected and terminated to the outdoors.

⚠WARNING:

Refer to page 16 for required clearances to combustible materials. Improper clearances can cause explosion or fire resulting in death, personal injury, and/or product damage.

⚠CAUTIONS:

- **Check to make sure flue gases DO NOT recirculate into the air intake terminal when using direct venting. If the water heater is having service issues, flue recirculation may be a contributing factor.**
- **Even when the minimum vent terminal separation distances are followed, recirculation may still occur depending upon the location outside the building, the distance from other buildings, proximity to corners, weather conditions, wind patterns, and snow depth.**
- **Periodically check to make sure that flue recirculation is not occurring. Signs of flue gas recirculation include frosted or frozen intake terminals and condensate in the intake terminal and venting system.**
- **Correction to flue recirculation may involve angling the intake away from the exhaust terminal and increasing the distance between them. Check to be sure the intake and exhaust terminals are not obstructed, especially during periods of below-freezing weather.**

Venting Requirements

The installation of venting must comply with national codes, local codes, and the vent manufacturer's instructions.

The vent exhaust and air intake must terminate outside as described in these instructions. **DO NOT** vent this water heater through a chimney. It must be vented separately from all other appliances.

NOTICE:

The unit can be vented using only the following approved vent pipe material.

Use only 2 or 3 inch diameter pipe. Refer to local codes for restrictions on the use of InnoFlue® PP, PVC, CPVC, or ABS pipe and fittings. All exhaust venting materials for product installed in Canada must meet ULC-S636.

The use of cellular core PVC (ASTM F891), cellular core CPVC, or Radel® (polyphenolsulfone) in non-metallic venting systems is prohibited and that covering non-metallic vent pipe and fittings with thermal insulation is prohibited.

This water heater requires a special venting system. Refer to venting supplier's instruction for complete parts list and method of installation. The manufacturers and product lines listed on the following tables have been tested and authorized to safely operate with Rheem tankless water heater.

Approved Vent Materials, Fittings and Terminations:

	PVC	CPVC	ABS
Acceptable Materials for Exhaust	Schedule 40, ASTM D-1785	Schedule 40, ASTM F-441	Schedule 40, ASTM D-2661
Acceptable Materials for Air Intake	Schedule 40, ASTM D-1785, and DWV, ASTM-D2665	Schedule 40, ASTM F-441, and CPVC 4120, ASTM-D2846	Schedule 40, ASTM D-2661
Fittings	Schedule 40, ASTM D-2665	Schedule 40, ASTM F-438	Schedule 40, ASTM D-2661
Terminations (Manufactured by Polytech)	SP20285	SP21025	
	SP20286	SP21026	
	SP20245		
	SP20897		

ABS is not permitted for exhaust vent in Canada

Approved Polypropylene Vent Manufacturer/Trade Name:

Manufacturer	Centrotherm
Trade Name	InnoFlue®
Single Wall Pipe	ISVL**** or ISVL****UV
Elbow	ISELL**** or ISELL****UV
Adapter	ISAAL0202
Non-Return Valve (NRV)	ISNRV****
Siphon	IASJBVS
Termination	ISLPT**** or ISTT****

*Refers to variations in nominal size.

DO NOT USE Schedule 20, Cell Core, Drain Pipe, Galvanized, Aluminum, B-Vent, or any flexible vent.

Venting for Direct-Vent Water Heater

Appropriate dip switch adjustment shall be required to allow certain vent length. There are 4 vent configuration settings, A-0, A-1, A-2, and A-3 settings at 0-2000 ft (0-610 m) elevation.

Vent Lengths

Before starting the vent installation, careful planning should be given to the routing and termination of the vent pipes. The length of the vent pipes (inlet and outlet) should be kept to a minimum. Also, see pages 26 and 27 for vent terminal placement. Refer to the maximum and minimum vent length charts for the pipe sizes that can be used and the total equivalent length of pipe that can be used. **DO NOT** exceed equivalent length of pipe in maximum vent length chart.

SINGLE UNIT: MAX. EQUIVALENT VENT LENGTHS - STRAIGHT PIPE		
Number of 90° Elbows	Max Length 2" Straight Pipe	Max Length 3" Straight Pipe
0	60 ft. (18.3 m)	150 ft. (45.7 m)
1	54 ft. (16.5 m)	144 ft. (43.9 m)
2	48 ft. (14.6 m)	138 ft. (42.7 m)
3	42 ft. (12.8 m)	132 ft. (40.2 m)
4	36 ft. (11.0 m)	126 ft. (38.4 m)
5	30 ft. (9.1 m)	120 ft. (36.6 m)
6	24 ft. (7.3 m)	114 ft. (34.7 m)

EQUIVALENT FT. OF ELBOWS		
	2" Pipe	3" Pipe
90°	6 ft. (1.83 m)	6 ft. (1.83 m)
45°	3 ft. (0.9 m)	3 ft. (0.9 m)

*The altitude settings for installations at levels greater than 2000 ft (610 m), can be found in the "High-Altitude Dip Swich Adjustments" section of this manual. DIP switch changes will be necessary at higher altitudes.

The vent termination is not included in the equivalency calculations.

NOTICE: A 90°, ¼ standard bend or long bend elbow is equivalent to 6 ft. (1.83 m) of straight pipe. A 45°, 1/8 standard bend or long bend elbow is equivalent to 2.5 ft. (0.76 m) of straight pipe. A 90°, short bend radius elbow is equivalent to 12 ft. (3.66 m) of straight pipe.

DO NOT use unequal diameters of pipe and fittings for the vent system.

See examples below.

Elbow Examples

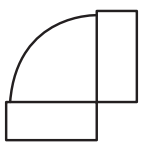

Short Bend 90° Elbow
OK to Use

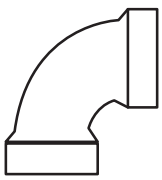

Standard Bend 90° Elbow
OK to Use

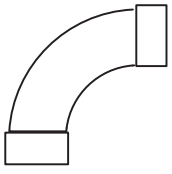

Long Bend 90° Elbow
OK to Use

INSTALLATION INSTRUCTIONS

Vent Length and High Altitude DIP switch Adjustments

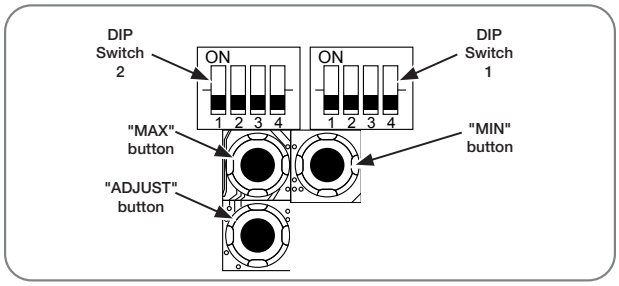

A-0 setting is default and factory setting. All dip switches are off.

SECTION	HIGH-ALTITUDE
Sea Level (A Setting)	0-2000 ft (0 m - 610 m)
B Setting	2001 ft - 5400 ft (610 m - 1650 m)
C Setting	5401 ft - 7800 ft (1650 m - 2377 m)

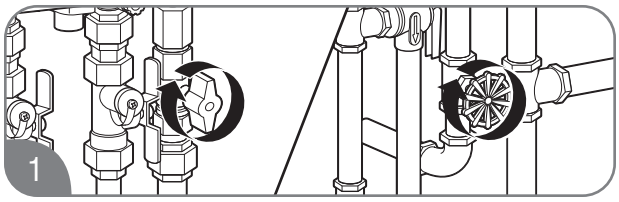

Turn off the gas and water to the water heater by closing the shut-off valves.

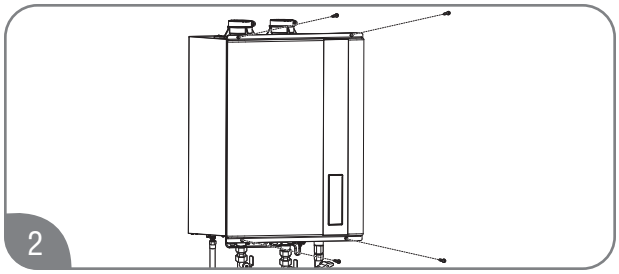

Remove the front cover panel on the water heater.

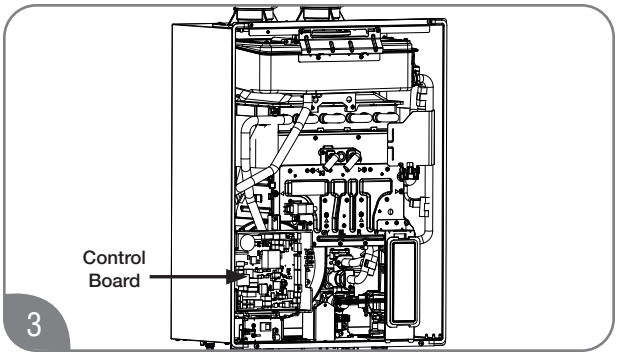

Find DIP Switch 1 and 2 located in the top-right portion of the control board.

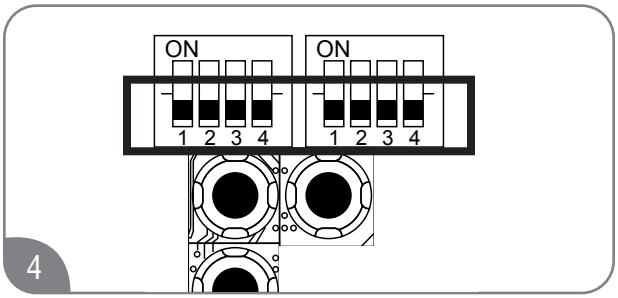

The factory settings for this switch should all be in the OFF position (DOWN), which is the A-0 setting.

For longer vent lengths and altitudes above 2000 ft. (610 m), refer to the table below for the necessary DIP switch settings. These setting must be changed to ensure proper operation.

NOTICE

DO NOT alter any other DIP switch settings. Please contact technical service listed on page 76 of this use and care manual if you have any questions of DIP switch adjustments.

3" VENT SYSTEM DIAMETER						
Identify Vent Length	IDENTIFY ALTITUDE					
	0 - 2,000 ft		2,001 - 5,400 ft		5,400 - 7,800 ft	
		Dip		Dip		Dip
6 to 45 feet (1.8 - 13.7 meters)	A-0 (Factory Setting)	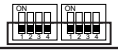	B-0	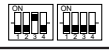	C-0	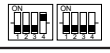
45 to 150 feet (13.7 to 45.7 meters)	A-1		B-1		C-1	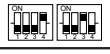

2" VENT SYSTEM DIAMETER						
Identify Vent Length	IDENTIFY ALTITUDE					
	0 - 2,000 ft		2,001 - 5,400 ft		5,400 - 7,800 ft	
		Dip		Dip		Dip
MUST CHANGE FACTORY DIP SETTING	A-0 (Factory Setting)					
6 to 21 feet (1.8 to 6.4 meters)	A-1		B-1		C-1	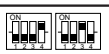
21 to 42 feet (6.4 to 12.8 meters)	A-2		B-2		C-2	
42 to 60 feet (12.8 to 18.3 meters)	A-3		B-3		C-3	

Venting for Direct-Vent Water Heater

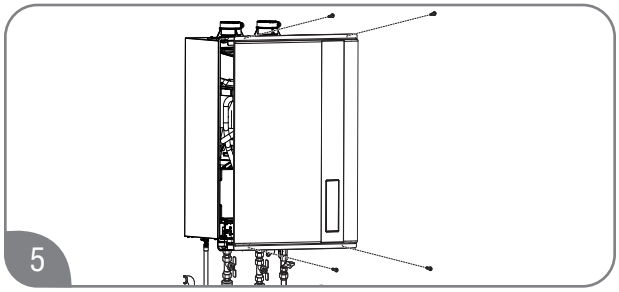

Replace the front cover panel on the water heater.

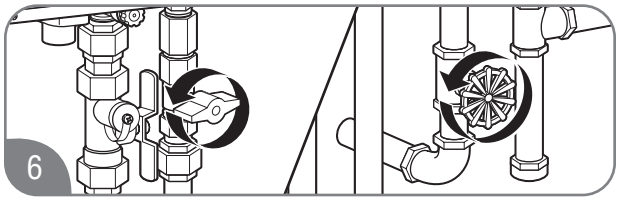

Turn on the gas and water to the water heater by opening the shut-off valves.

NOTICE:

To use 3" vent pipe, an increasing adapter will be required.

⚠WARNING:

To use Category III Stainless Steel, a proper transition part will be required to prevent flue gas from leaking.
This water heater requires the correct DIP switch adjustments per vent length for proper operation.
Incorrect DIP switch adjustments may cause improper water heater operation resulting in serious injury or death.

Depending on the size of pipe that is chosen for venting the water heater, it might be necessary to use a fitting for stepping down in pipe size, to connect to the water heater.

All intake and exhaust venting components must have the same diameter size. **DO NOT** use a different size on the intake and exhaust venting.

It is recommend to have a vent length as short as possible. Input rate of the water heater decreases if there is restriction (pressure drop) in the venting system.

The following table shows approximate input rate reduction. Actual input rate reduction may be different at each installation.

Setting	Vent Size	Min Vent Length	Max Vent Length
A-0	3"	0%	5%
	2"	---	---
A-1	3"	5%	10%
	2"	5%	10%
A-2	2"	15%	20%
A-3	2"	20%	25%

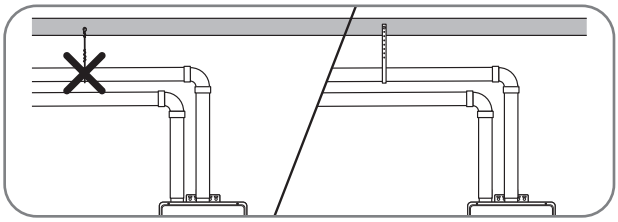

The unit may be vented horizontally through a wall or vertically through the roof. Pipe runs must be adequately supported along both vertical and horizontal runs.

Maximum unsupported span is recommended to be no more than 4 feet (1.2 m). It is imperative that the first hanger be located on the horizontal runs immediately adjacent to the first 90-degree elbow from the vertical rise. Only use support isolation hanging bands. **DO NOT** use wire to support pipe runs.

Stress levels in the pipe and fittings can be significantly increased by improper installation. If rigid pipe clamps are used to hold the pipe in place, or if the pipe cannot move freely through a wall penetration, the pipe may be directly stressed, or high thermal stresses may be formed when the pipe heats up and expands. Install accordingly to minimize such stresses.

Venting for Direct-Vent Water Heater

NOTICES:

- **It is recommended that the air intake pipe and exhaust pipe have a 1/4" per foot upward slope toward the outdoors.**
- **Maintain the proper clearance between the vent pipe and combustible or noncombustible materials as described on page 16.**
- **Recommend use of condensation trap/collar on the air intake to prevent water entering the heater cabinet**
- **A clearance of 0 in. (0 cm) is allowed between the vent or air intake pipe and combustible material.**
- **Use proper support for the vent and air intake pipes.**
- **It is recommended the support method used isolates the vent pipe from floor joists or other structural members. This helps prevent transmission of noise and vibration.**
- **DO NOT support, pin, or otherwise secure the venting system in a way that restricts the normal thermal expansion and contraction of the chosen venting material.**

See page 25 for additional requirements for the Commonwealth of Massachusetts.

Preexisting Venting Notes:

If the water heater is being installed as a replacement for an existing water heater, a thorough inspection of the existing venting and air intake system must be performed prior to any installation work. Verify that the correct materials, vent lengths, and terminal locations as described in this manual have been met. Carefully inspect the entire venting and air intake system for any signs of cracks or fractures, particularly at the joints between elbows or other fittings and the straight runs of vent pipe. Check the system for signs of sagging or other stresses in the joints as a result of misalignment of any components in the system. If any of these conditions are found, they must be corrected in accordance with the venting instructions in this manual before completing the installation and putting the water heater into service.

When the water heater is installed above 2000 ft. (610 m), the settings on the DIP switch located on the control board need to be changed per vent length and altitude. If these settings are not changed, the water heater may not function properly.

Refer to "Venting for Direct Vent Water Heaters" on page 22 for the vent lengths at each setting.

NOTICE:

DO NOT alter any other DIP switch settings. The manifold pressure will be reduced accordingly.

Please contact technical service listed on page 76 of this use and care manual if you have any questions of high altitude DIP switch adjustments.

⚠WARNING:

This water heater requires the correct DIP switch adjustments per vent length and altitude for proper operation. Incorrect DIP switch adjustments may cause improper water heater operation resulting in serious injury or death.

NOTICE:

It is recommend to have a vent length as short as possible. Input rate at high altitude naturally is derated. In addition to that, input rate of the water heater decreases more if there is restriction (pressure drop) in the venting system. Refer to input rate reduction table due to vent length on page 23. Actual input rate reduction may be different at each installation.

Venting for Direct-Vent Water Heater

In the Commonwealth of Massachusetts

The Commonwealth of Massachusetts requires compliance with regulation 248 CMR 4.00 and 5.00 for installation of through-the-wall vented gas appliances as follows:

5.08: Modifications to NFPA–54, Chapter 10

(1) Revise NFPA–54 section 10.5.4.2 by adding a second exception as follows:

Existing chimneys shall be permitted to have their use continued when a gas conversion burner is installed, and shall be equipped with a manual reset device that will automatically shut off the gas to the burner in the event of a sustained back-draft.

(2) Revise 10.8.3 by adding the following additional requirements:

(a) For all side-wall, horizontally vented, gas-fueled equipment installed in every dwelling, building, or structure used in whole or part for residential purposes, including those owned or operated by the Commonwealth and where the side-wall exhaust vent termination is less than seven (7) feet above finished grade in the area of the venting, including but not limited to decks and porches, the following requirements shall be satisfied.

1. INSTALLATION OF CARBON MONOXIDE DETECTORS. At the time of installation of the side-wall, horizontally vented, gas-fueled equipment, the installing plumber or gas fitter shall observe that a hard-wired carbon monoxide detector with an alarm and battery backup is installed on the floor level where the gas equipment is to be installed. In addition, the installing plumber or gas fitter shall observe that a battery-operated or hard-wired carbon monoxide detector with an alarm is installed on each additional level of the dwelling, building, or structure served by the side-wall, horizontally vented, gas-fueled equipment. It shall be the responsibility of the property owner to secure the services of qualified licensed professionals for the installation of hard-wired carbon monoxide detectors.

a. In the event that the side-wall, horizontally vented, gas-fueled equipment is installed in a crawl space or an attic, the hard-wired carbon monoxide detector with alarm and battery backup may be installed on the next adjacent floor level.

b. In the event that the requirements of this subdivision cannot be met at the time of completion of installation, the owner shall have a period of thirty (30) days to comply with the above requirements, provided, however, that during said thirty (30) day period, a battery-operated carbon monoxide detector with an alarm shall be installed.

2. APPROVED CARBON MONOXIDE DETECTORS. Each carbon monoxide detector as required in accordance with the above provisions shall comply with NFPA 720 and be ANSI/UL 2034-listed and IAS-certified.

3. SIGNAGE. A metal or plastic identification plate shall be permanently mounted to the exterior of the building at a minimum height of eight (8) feet above grade directly in line with the exhaust vent terminal for the horizontally vented, gas-fueled heating appliance or equipment. The sign shall read, in print size no less than one-half (1/2) inch in size, "GAS VENT DIRECTLY BELOW. KEEP CLEAR OF ALL OBSTRUCTIONS."

4. INSPECTION. The state or local gas inspector of the side-wall, horizontally vented, gas-fueled equipment shall not approve the installation unless, upon inspection, the inspector observes carbon monoxide detectors and signage installed in accordance with the provisions of 248 CMR 5.08 (2)(a)(1 through 4).

(b) EXEMPTIONS: The following equipment is exempt from 248 CMR 5.08 (2)(a)(1 through 4):

1. The equipment listed in Chapter 10 entitled "Equipment Not Required To Be Vented" in the most current edition of NFPA 54 as adopted by the Board, and

2. Product-approved side-wall, horizontally vented, gas-fueled equipment installed in a room or structure separate from the dwelling, building, or structure used in whole or in part for residential purposes.

(c) MANUFACTURER REQUIREMENTS – GAS EQUIPMENT VENTING SYSTEM PROVIDED. When the manufacturer of product-approved side-wall, horizontally vented, gas-fueled equipment provides a venting system design or venting system components with the equipment, the instructions provided by the manufacturer for installation of the equipment and the venting system shall include:

1. Detailed instructions for the installation of the venting system design or the venting system components; and

2. A complete parts list for the venting system design or venting system.

(d) MANUFACTURER REQUIREMENTS – GAS EQUIPMENT VENTING SYSTEM NOT PROVIDED. When the manufacturer of product-approved side-wall, horizontally vented, gas-fueled equipment does not provide the parts for venting the flue gases, but identifies "special venting systems," the following requirements shall be satisfied by the manufacturer:

1. The referenced "special venting systems" instructions shall be included with the appliance or equipment installation instructions, and

2. The "special venting systems" shall be product-approved by the Board, and the instructions for that system shall include a parts list and detailed installation instructions.

(e) A copy of all installation instructions for all product-approved side-wall, horizontally vented, gas-fueled equipment, all venting instructions, all parts lists for venting instructions, and/or all venting design instructions shall remain with the appliance or equipment at the completion of the installation.

NOTE: For the State of Massachusetts, use only plastic piping, fittings and vent terminations as specified in this manual which are approved by the Massachusetts Board of State Examiners of Plumbers and Gas for venting of appliances (see link below):

https://licensing.reg.state.ma.us/pubLic/pl_products/pb_pre_form.asp

INSTALLATION INSTRUCTIONS

Venting for Direct-Vent Water Heater

The following charts detail the minimal dimensional information needed to determine the proper location of the vent terminal for direct vent and outdoor tankless water heaters.

Horizontal Vent Terminal Location for Other than Direct Vent/Outdoor Heater

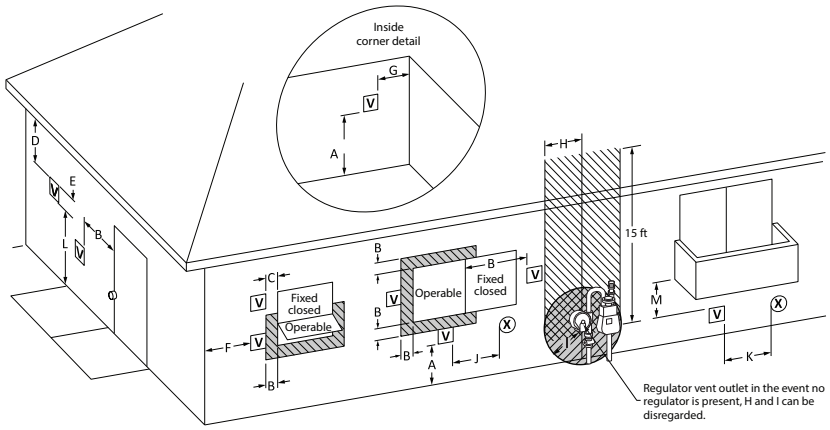

V VENT TERMINAL X AIR SUPPLY INLET AREA WHERE TERMINAL IS NOT PERMITTED

	Canadian Installations [1]	US Installations [2]
A= Clearance above grade, veranda, porch, deck or balcony.	12 inches (30 cm)	12 inches (30 cm)
B= Clearance to window or door that may be opened.	• 6 in (15 cm) for appliances ≤ 10,000 Btuh (3 kW), • 12 in (30 cm) for appliances > 10,000 Btuh (3 kW) and ≤ 100,000 Btuh (30 kW), • 36 in (91 cm) for appliances > 100,000 Btuh (30 kW)	4 ft (1.2) below or to side of opening; 1 ft (300 mm) above opening.
C= Clearance to permanently closed window.	0 in (0 cm)	0 in (0 cm)
D= Vertical Clearance to ventilated soffit located above the terminal within a horizontal distance of 2 feet (61 cm) from the center line of the terminal.	12 in (30 cm)	12 in (30 cm)
E= Clearance to unventilated soffit.	12 in (30 cm)	12 in (30 cm)
F= Clearance to outside corner.	24 in (61 cm)	24 in (61 cm)
G= Clearance to inside corner.	18 in (46 cm)	18 in (46 cm)
H = Clearance to each side of center line extended meter/regulator assembly. above	3 feet (91 cm) within a height 15 feet (4.6 m)	3 ft (91 cm) within a height of 15 ft (4.6 m)
I = Clearance to service regulator vent outlet.	3 feet (91 cm)	3 feet (91 cm)
J = Clearance to nonmechanical air supply inlet to building or the combustion air inlet to any other appliance..	• 6 in (15 cm) for appliances ≤ 10,000 Btuh (3 kW), • 12 in (30 cm) for appliances > 10,000 Btuh (3 kW) and ≤ 100,000 Btuh (30 kW), • 36 in (91 cm) for appliances > 100,000 Btuh (30 kW)	4 ft (1.2) below or to side of opening; 1 ft (300 mm) above opening.
K = Clearance to mechanical air supply inlet.	6 feet (1.83 m)	3 feet (91 cm) above if within 10 feet (3 m) horizontally.
L = Clearance above paved side walk or paved driveway located on public property.	7 feet (2.13 m)	7 feet (2.13 m) for mechanical draft systems (Category I appliances); vents for Category II and IV appliances cannot be located above public walkways or other areas where condensate or vapor can cause a nuisance or hazard.
M = Clearance under veranda, porch, deck or balcony.	12 in (30 cm) ‡	12 in (30 cm) ‡

[1] In accordance with the current *CSA B149.1 Natural Gas and Propane Installation Code*
[2] In accordance with the current *ANSI Z223.1/ NFPA 54 National Fuel Gas Code*
‡ Permitted only if veranda, porch, deck, or balcony is fully open on a minimum of two sides beneath the floor.

Venting for Direct-Vent Water Heater

Horizontal Vent Termination Location for Direct-Vent Water Heater

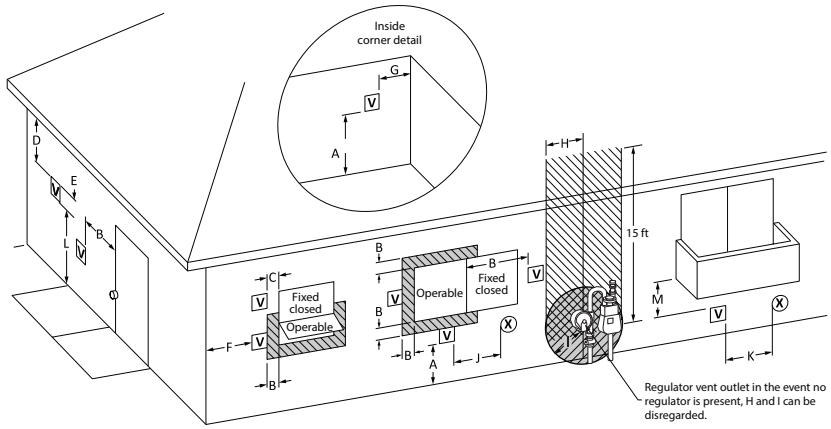

V VENT TERMINAL X AIR SUPPLY INLET AREA WHERE TERMINAL IS NOT PERMITTED

	Canadian Installations [1]	US Installations [2]
A= Clearance above grade, veranda, porch, deck or balcony.	12 inches (30 cm)	12 inches (30 cm)
B= Clearance to window or door that may be opened.	• 6 in (15 cm) for appliances ≤ 10,000 Btuh (3 kW), • 12 in (30 cm) for appliances > 10,000 Btuh (3 kW) and ≤ 100,000 Btuh (30 kW), • 36 in (91 cm) for appliances > 100,000 Btuh (30 kW)	• 6 in (15 cm) for appliances ≤ 10,000 Btuh (3 kW), • 12 in (30 cm) for appliances > 10,000 Btuh (3 kW) and ≤ 50,000 Btuh (15 kW), • 12 in (30 cm) for appliances > 50,000 Btuh (15 kW)
C= Clearance to permanently closed window.	0 in (0 cm)	0 in (0 cm)
D= Vertical Clearance to ventilated soffit located above the terminal within a horizontal distance of 2 feet (61 cm) from the center line of the terminal.	12 in (30 cm)	12 in (30 cm)
E= Clearance to unventilated soffit.	12 in (30 cm)	12 in (30 cm)
F= Clearance to outside corner.	24 in (61 cm)	24 in (61 cm)
G= Clearance to inside corner.	18 in (46 cm)	18 in (46 cm)
H = Clearance to each side of center line extended meter/regulator assembly. above	3 feet (91 cm) within a height 15 feet (4.6 m)	3 ft (91 cm) within a height of 15 ft (4.6 m)
I = Clearance to service regulator vent outlet.	3 feet (91 cm)	3 feet (91 cm)
J = Clearance to nonmechanical air supply inlet to building or the combustion air inlet to any other appliance..	• 6 in (15 cm) for appliances ≤ 10,000 Btuh (3 kW), • 12 in (30 cm) for appliances > 10,000 Btuh (3 kW) and ≤ 100,000 Btuh (30 kW), • 36 in (91 cm) for appliances > 100,000 Btuh (30 kW)	• 6 in (15 cm) for appliances ≤ 10,000 Btuh (3 kW), • 12 in (30 cm) for appliances > 10,000 Btuh (3 kW) and ≤ 50,000 Btuh (15 kW), • 12 in (30 cm) for appliances > 50,000 Btuh (15 kW)
K = Clearance to mechanical air supply inlet.	6 feet (1.83 m)	3 feet (91 cm) above if within 10 feet (3 m) horizontally.
L = Clearance above paved side walk or paved driveway located on public property.	7 feet (2.13 m)	7 feet (2.13 m) for mechanical draft systems (Category I appliances); vents for Category II and IV appliances cannot be located above public walkways or other areas where condensate or vapor can cause a nuisance or hazard.
M = Clearance under veranda, porch, deck or balcony.	12 in (30 cm) ‡	12 in (30 cm) ‡

[1] In accordance with the current *CSA B149.1 Natural Gas and Propane Installation Code*
[2] In accordance with the current *ANSI Z223.1/ NFPA 54 National Fuel Gas Code*
‡ Permitted only if veranda, porch, deck, or balcony is fully open on a minimum of two sides beneath the floor.

Venting for Direct-Vent Water Heater (cont.)

Horizontal Vent Considerations

⚠WARNING:

Moisture in the flue gas will condense as it leaves the vent terminal. In cold weather this condensate can freeze on the exterior wall, under the eaves, and on surrounding objects. Some discoloration to the exterior of the building is to be expected. However, improper location or installation can result in severe damage to the structure or exterior finish of the building.

- **DO NOT locate vent terminal on the side of a building with prevailing winter winds. This will help prevent water lines from freezing and moisture from freezing on walls and under eaves.**
- **DO NOT locate vent terminal too close to shrubbery, as flue gasses may damage them. A minimum distance of 4 ft. (1.22 m) is recommended.**
- **All painted surfaces should be primed to lessen the chance of physical damage. Painted surfaces will require maintenance.**
- **Guard against accidental contact with people and pets.**

Indoor Tankless Water Heaters

⚠WARNING:

For multiple-unit installations, a minimum distance between vent terminations must be maintained to prevent recirculation of vent gases. Maintain a center-to-center distance between each pair of vent terminations as listed below:

24 in. (61 cm) for a two-unit installation;

24 in. (61 cm) and 36 in. (91.4 cm) for a three-unit installation;

24 in. (61 cm), 36 in. (91.4 cm), and 24 in. (61 cm) for a four-unit installation.

- **DO NOT terminate vent directly on brick or masonry surfaces. Use rust-resistant, sheet-metal backing plate behind the vent.**
- **The vent for this appliance shall not terminate**
  - **Over public walkways; or**
  - **Near soffit vents or crawl space vents or other area where condensate or vapor could create a nuisance or hazard or cause property damage; or**
  - **Where condensate or vapor could cause damage or could be detrimental to the operation of regulators, relief valves, or other equipment.**
- **Caulk all cracks, seams, and joints within 6 ft. (1.8 m) of the vent terminal.**
- **Caulk around wall faceplate for weather-tight seal.**
- **DO NOT extend exposed vent pipe of indoor water heaters outside of the building.**
- **This water heater requires its own separate venting system. DO NOT connect the exhaust vent to an existing vent pipe or chimney.**
- **<u>Observe minimum clearances. Vent terminals must be a minimum of 5.5 inches (14 cm) and a maximum of 24 inches (61 cm) apart horizontally.</u>**
- **Install indoor and outdoor water heaters such that air inlet and flue outlet are above anticipated snow level.**

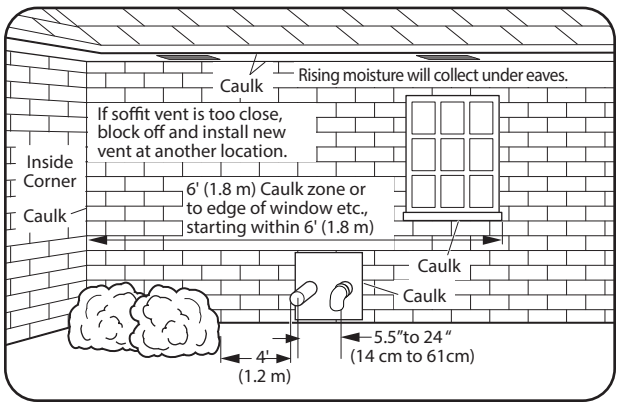

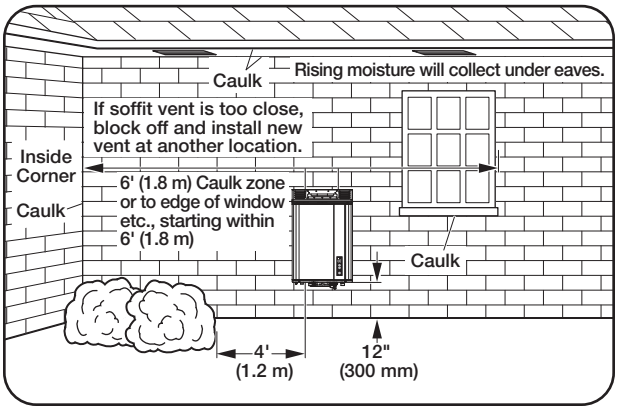

Venting for Direct-Vent Water Heater (cont.)

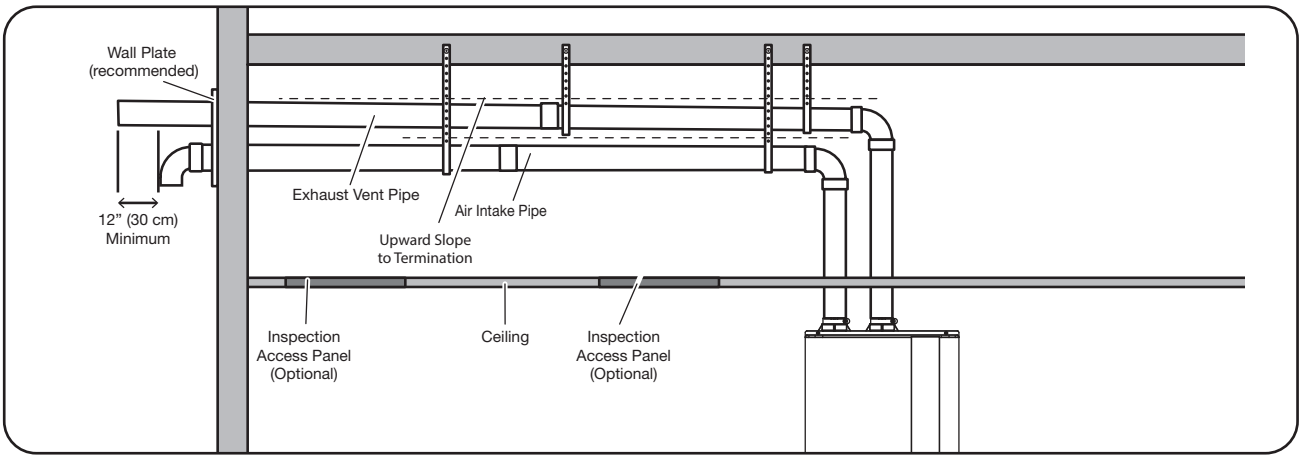

Horizontal Vent Installation

⚠WARNING:

Danger of fire or bodily injury – Solvent cements and primers are highly flammable. Provide adequate ventilation and DO NOT assemble near heat source or open flame. DO NOT smoke. Avoid skin or eye contact. Observe all cautions and warnings on material containers.

⚠CAUTION:

Use tankless water heater manufacturer-approved Schedule 40 PVC (foam core is not permitted at any time), Schedule 80 PVC, CPVC, ABS or UL 1738-listed Category III Stainless Steel or InnoFlue® PP. No other vent material is permitted. For Canada, installations must follow ULC S636 for exhaust venting.

Joining Pipes and Fittings

All pipe, fittings, solvent cement, primers, and procedures, for the U.S., must conform to American National Standards Institute and American Society for Testing and Materials (ANSI/ASTM) standards. For Canada, all pipe, fittings, solvent cement, primers, and procedures must conform to ULC-S636 and vent manufacturer specifications.

⚠CAUTIONS:

- **DO NOT use solvent cement that has become curdled, lumpy, or thickened.**
- **DO NOT thin solvent cement. Observe shelf precautions printed on the containers.**
- **For applications below 32°F, use only lower temperature-type solvent cement.**
- **Appropriate solvent and cleaner must be used for the type of vent pipe used (PVC, CPVC, or ABS).**

Cleaner-Primer and Medium-Body Solvent Cement

All joints in vent piping must be properly sealed, and we recommend using the following material:

PVC materials should use ASTM D-2564-grade cement.

CPVC materials should use ASTM F-493-grade cement.

ABS materials should use ASTM D-2235-grade cement (ABS is not allowed for exhaust vent in Canada).

Cementing Joints

1. Cut pipe end square; remove jagged edges and burrs. Chamfer end of pipe and clean fitting socket and pipe joint area of all dirt, grease, or moisture.
2. After checking pipe and socket for proper fit, wipe socket and pipe with cleaner-primer. Apply a liberal coat of primer to inside surface of socket and outside of pipe.
3. Apply a thin coat of cement evenly in the socket. Quickly apply a heavy coat of cement to the pipe and insert pipe into fitting with a slight twisting motion until it bottoms out.
4. Hold the pipe fitting for 30 seconds to prevent the tapered socket from pushing the pipe out of the fitting.
5. Wipe all excess cement from the joint with a rag. Allow 15 minutes before handling. Cure time will vary according to fit, temperature, and humidity.

NOTICE:

- **Cement must be fluid; if not, recoat with fresh cement.**
- **Stir the solvent frequently while using. Use a natural bristle brush or the dauber supplied with the can. The proper brush size is one inch.**
- **DO NOT use cement for InnoFlue® PP.**

INSTALLATION INSTRUCTIONS

Horizontal Vent Installation (cont.)

Fasteners will vary depending on the wall type.

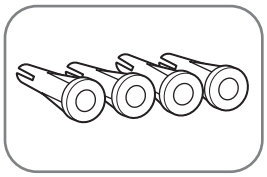

For particle board or composite sheathing, use 4 hollow wall anchors. The anchors should be at least 1/8 in. (0.3 cm) in diameter and the appropriate length for the sheathing thickness.

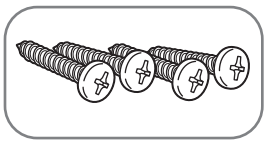

For plywood or solid wood sheathing or members, use 4 #10 x 1 1/4-in. wood screws.

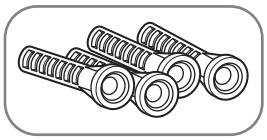

For masonry walls, use suitable masonry anchors long enough to pass through the wall.

NOTICE:

- **The exhaust vent terminal must extend a minimum of 12 inches (30.5 cm) more than the air intake terminal from the exterior wall. Also, an edge to edge distance between an air intake termination and an exhaust termination shall be at least 12 inches (30.5 cm) for any directions to prevent recirculation of vent gases.**
- **To prevent possibility of condensate freeze-up, DO NOT install vent kits one above the other.**

Once the vent terminal location has been determined, make holes through the exterior wall to accommodate the vent pipes. Vent pipes must exit exterior wall horizontally only.

The standard horizontal air intake termination is a 2-inch or 3-inch 90 degree elbow. This prevents rain or any other liquid for getting into air intake and the pipe from being pushed back into the structure. The standard horizontal exhaust outlet termination is a 2-inch or 3-inch pipe which terminates 12 inches from the air intake termination. Insert a small length of vent pipe through the wall and connect the coupling. Connect vent cap or terminal to the vent pipe on the exterior of the building.

1. Observe minimum clearances. Vent terminals must be a minimum of 5.5 inches (14 cm) and a maximum of 24 inches (61 cm) apart horizontally.
2. Cut two 2 1/2” (6.4 cm) diameter holes [for a 2” (5.1 cm) diameter pipe] or 3 1/2” (8.9 cm) diameter holes [for a 3” (7.6 cm) diameter pipe] for the exhaust vent and air intake openings.

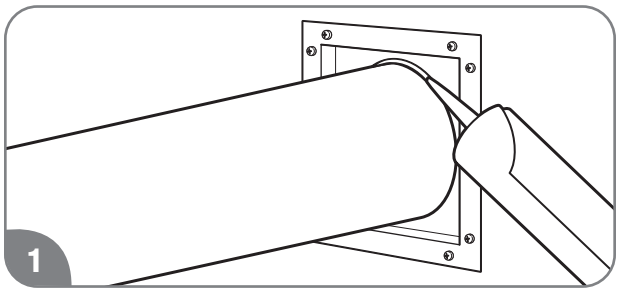

Apply silicone sealant or silicone/latex caulk to seal the vent pipe to the vent coupling to permit field disassembly for annual inspection and cleaning. Completely seal where it passes through the wall plate and where it is attached to the structure.

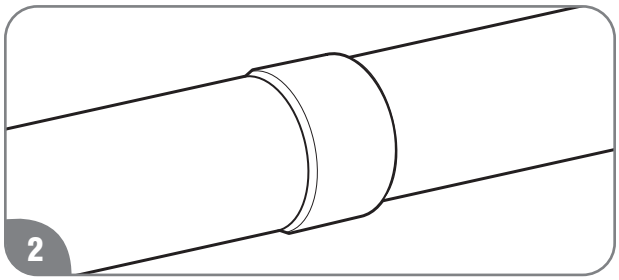

Attach the female end of the next vent pipe section to the male end of the 2-in./3-in. (5.1-cm/7.6-cm) vent pipe. See “Cementing Joints” on this Use and Care Manual.

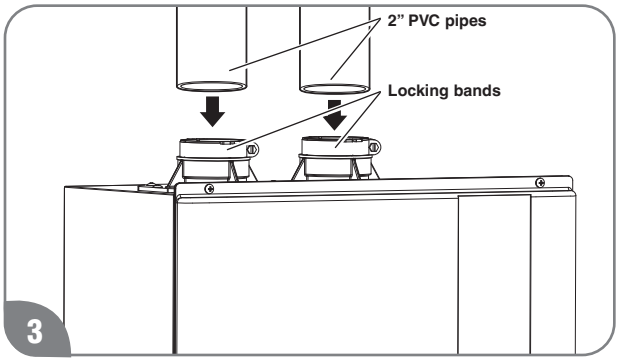

Insert a 2" PVC pipes slowly into an air intake connector and a flue connector located on top of the water heater until they stop. **DO NOT** use cement. Tighten 2 locking bands to secure 2" PVC pipes.

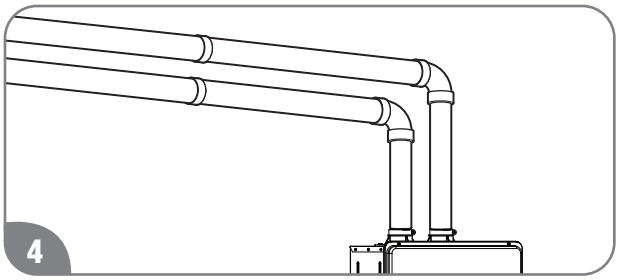

Complete the rest of the vent pipe installation to the water heater's flue outlet and air intake.

Venting for Direct-Vent Water Heater (cont.)

Alternative Horizontal Vent Installations

Alternative horizontal vent termination kits are commercially available. Please refer to the instruction sheet packaged with the kit for complete installation instructions.

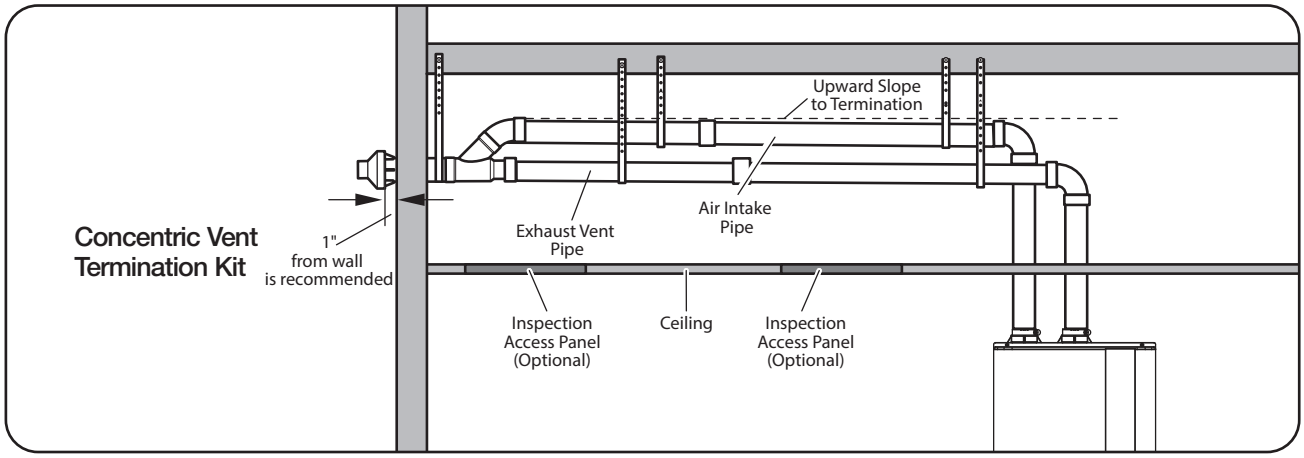

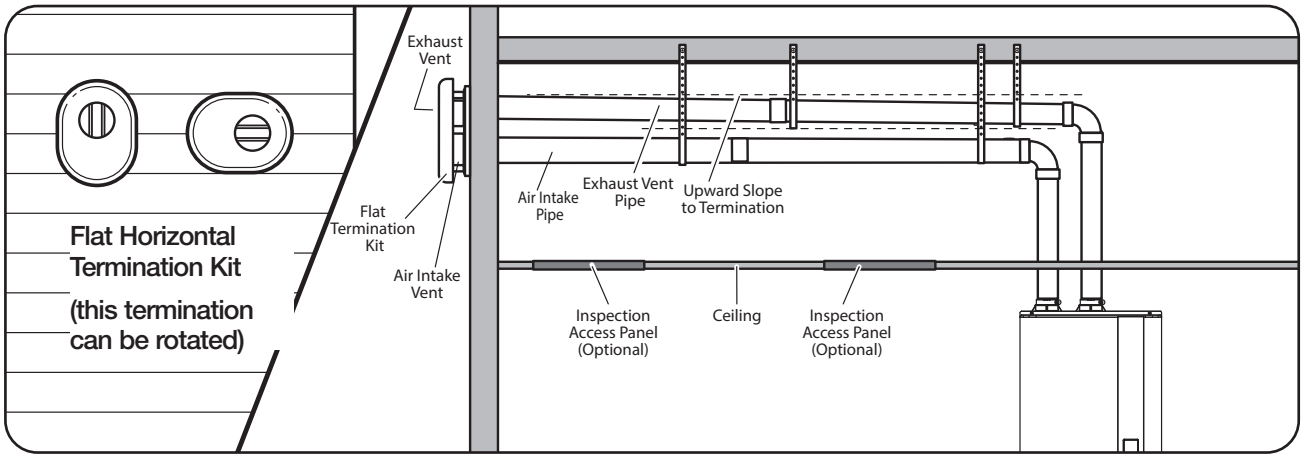

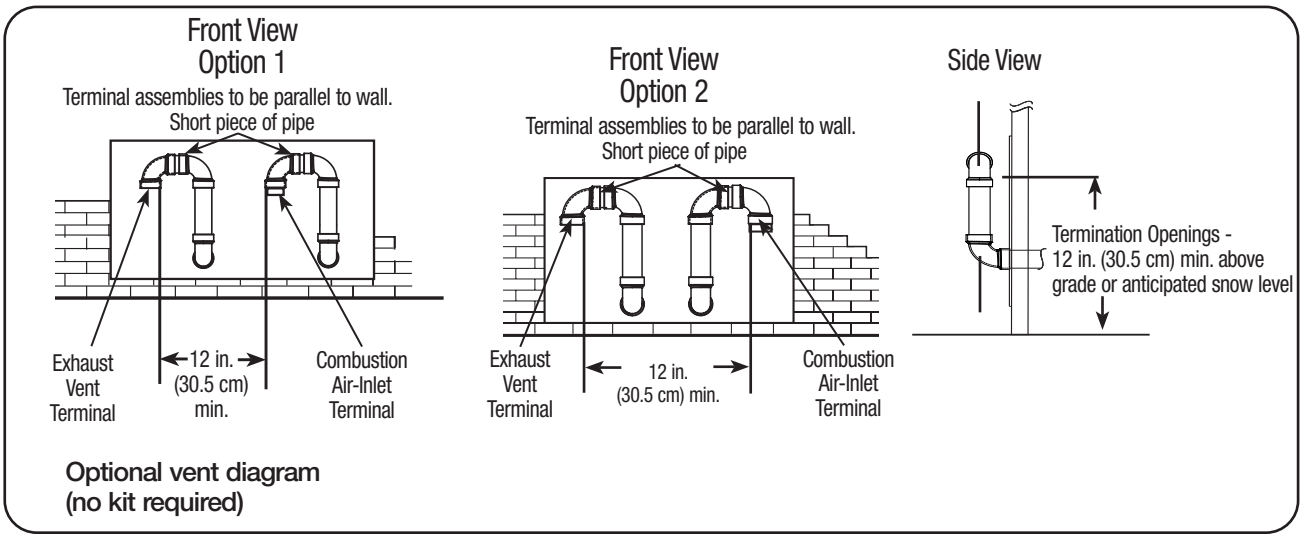

Optional vent diagram (no kit required)

INSTALLATION INSTRUCTIONS

Horizontal Vent and Combustion, Air-Inlet Alternate

Vent Riser Terminal Installation

Read these instructions thoroughly and make sure you understand all steps and procedures before proceeding with the installation.

Determine the locations for the vent and combustion air-inlet terminals then make two (2) holes through the exterior wall to accommodate the vent and combustion air-inlet pipes.

The horizontal distance between the vent and combustion air-inlet terminal centerlines must be from 12 in. (30.5 cm) minimum to 36in. (91.4 cm) maximum.

The vertical distance between the outlet of the vent terminal to the outlet of the combustion air-inlet terminal must be from 0 in. (0 cm) minimum to 36 in. (91.4 cm) maximum.

WARNING:

⚠ The vent terminal must always be installed at the same height or vertically higher than the combustion air-inlet terminal.

Maintain a minimum distance from the outlets of the vent and combustion air-inlet terminals of not less than 12 in. (30.5 cm) above grade or average snowfall whichever is greater.

IMPORTANT:

The vent terminal must always be installed at the same height or vertically higher than the combustion air-inlet terminal.

Insert lengths of vent and combustion air-inlet pipes through the wall as shown.

Allow sufficient length of pipe to extend beyond the exterior wall of the building for attachment of the vent riser assemblies as shown.

Place the supplied 1/2 in. (1.3 cm) mesh metal screen inside exhaust vent terminal fitting (optional).

NOTICE:

For cold climates the screen may be removed.

Connect the vent riser assemblies to the vent and combustion air-inlet pipes which are extending out of the building.

Ensure that the back of the 90° elbows are flush with the outside wall surface and that the vent and combustion air-inlet terminations of the vent risers are parallel with the outside wall.

IMPORTANT:

Remember to include the additional 90° elbows and vertical height of vent and combustion air-inlet pipes of the vent riser when calculating the maximum equivalent vent and combustion air-inlet system lengths. The maximum equivalent vent and combustion air-inlet system lengths must be as specified by the tables shown in the Use and Care Manual.

The vent and combustion air-inlet terminations are not included in the equivalency calculations.

Complete the installation of the remainder of the vent system and attach it to the vent connector fitting on the water heater's blower assembly.

Horizontal sections of the vent system must slope downward toward the water heater a minimum of 1/8 in. per foot (10 mm per m).

DO NOT use unequal diameters of pipe and fittings for the vent and combustion air-inlet systems except as defined previously.

NOTICE: The difference between the vent and combustion air-inlet system equivalent lengths must be no greater than 5 ft. (1.5 m).

Complete the installation of the remainder of the combustion air-inlet system and attach it to the combustion air-inlet connector fitting on the water heater's combustion air-inlet tube assembly.

Support vertical and horizontal lengths of the vent and combustion air-inlet systems as previously mentioned.

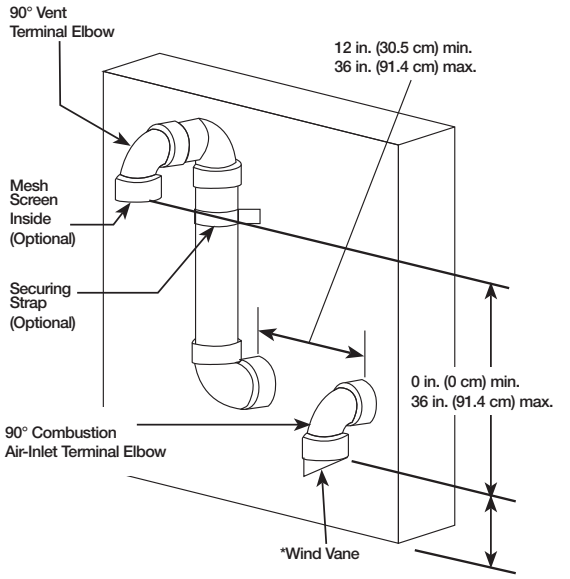

*For installations using 3 in. (7.6 cm) pipe and fittings, a 90 elbow equipped with a wind vane deflector must be used for the combustion air-inlet terminal. Contact Manufacture's National Service Department for the elbow.

Vertical Vent Installation

⚠WARNING:

Improper vent installation can result in death, personal injury, product damage, and/or poor performance.

NOTICE:

Only Rheem-approved AND ULC S636 approved termination and parts must be used during installation.

Maintain the recommended air space clearance to combustible materials and building insulation.

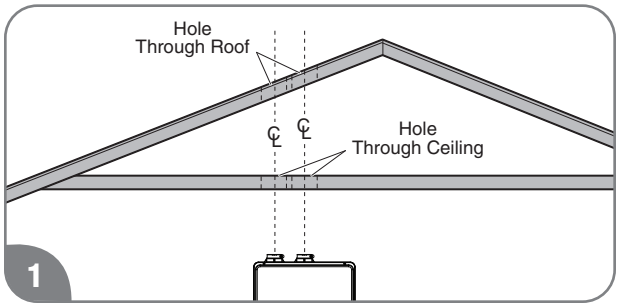

Cut a hole through the roof and interior ceiling to accommodate the vent pipes.

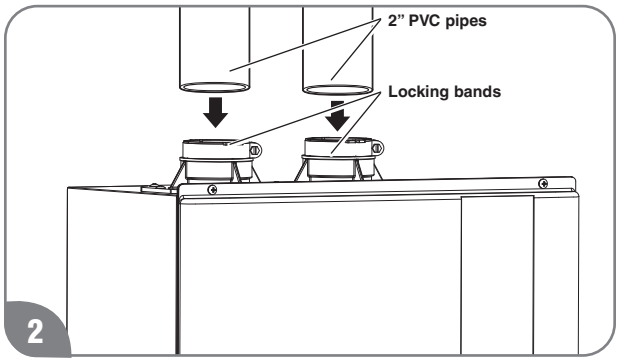

Insert a 2" PVC pipes slowly into an air intake connector and a flue connector located on top of the water heater until they stop. Tighten 2 locking bands to secure 2" PVC pipes.

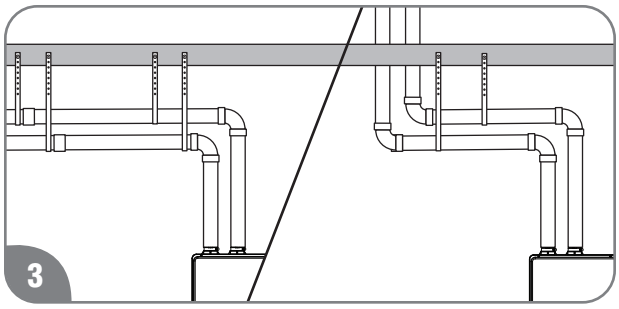

Support vertical and horizontal runs as described on page 23. Vertical supports are required every 4 ft. (1.2 m) along a vertical pipe route, after every transition to vertical, and after every offset elbow.

NOTICE:

Free-standing vent pipe that penetrates a roof/ceiling requires another means of support from a second location.

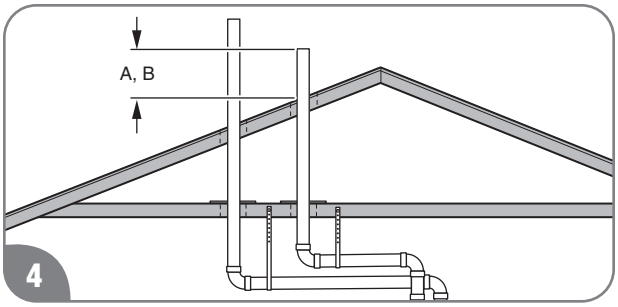

Determine the vent terminal height and install the vent pipe accordingly. Refer to “Vertical Vent Terminal Location” for clearance requirements.

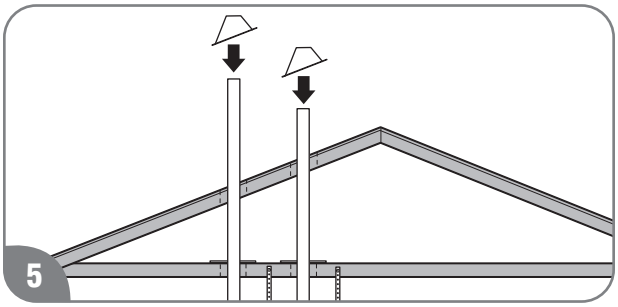

Install adequate flashing where the vent pipe passes through the roof.

INSTALLATION INSTRUCTIONS

Vertical Vent Terminal Location

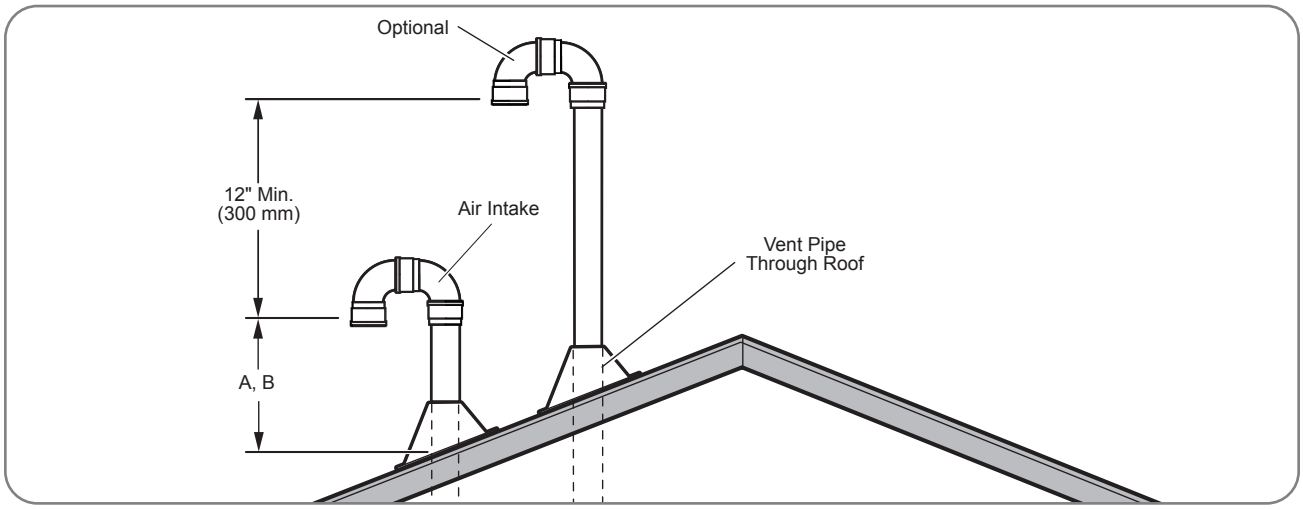

The following chart with diagrams details the minimum dimensional information needed to determine the proper location of the vertical vent terminal for direct-vent indoor tankless water heaters:

Location	U.S. Installation Requirements[1]	Canadian Installation Requirements[2]
A = Minimum clearance above the roof level.	12 in. (30 cm) above roof level.	18 in. (45.7 cm) above roof level.
B = Maximum clearance above roof level (without additional support for vent pipe).	24 in. (61 cm) above roof level.	24 in. (61 cm) above roof level.
C = Required vent clearance from any gable, dormer, or other roof structure with building interior access (i.e., vent, window).	4 ft. (1.2 m)	4 ft. (1.2 m)
D = Required vent clearance from any forced air inlet, including dryer and furnace air inlets.	10 ft. (3 m)	6 ft. (1.8 m)
E = Minimum/maximum horizontal distance between vent terminals	5.5 in. (14 cm)/24 in. (61 cm)	5.5 in. (14 cm)/24 in. (61 cm)

1 In accordance with current ANSI Z223.1/NFPA 54 National Fuel Gas Code.

2 In accordance with current CAN/CSA B149.1 Installation Codes.

The vertical intake air termination requires a return bend or two short or long sweep radius 90° elbows to keep the inlet downward and prevent entry of rain. Refer to figure above for the proper location of the air intake with respect to the exhaust outlet termination.

The vertical exhaust outlet termination is a 2-inch or 3-inch pipe which terminates at least 12 inches (30 cm) above the air intake termination. The exhaust outlet terminations must be at least 12 inches (30 cm) in US [at least 18 inches (46 cm) in Canada] above the roof line or anticipated snow levels.

Venting for Direct-Vent Water Heater (cont.)

Standard Vertical Vent Termination

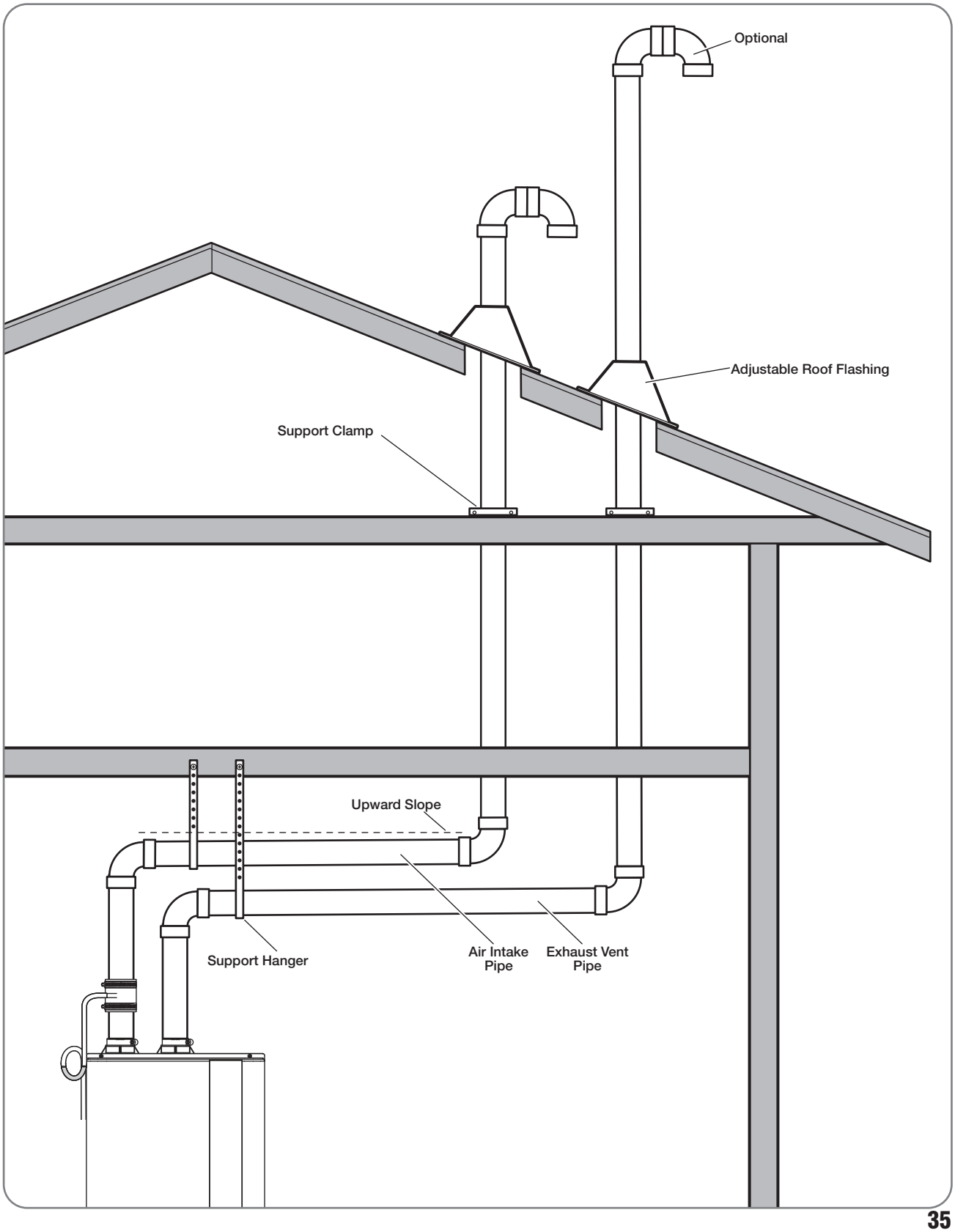

Alternative Vertical Vent Termination

Alternative vertical vent termination kits are commercially available. Please refer to the instruction sheet packaged with the kit for complete installation instructions.

⚠WARNING:

Under no circumstances should the exhaust pipe and the air intake pipe be connected together.

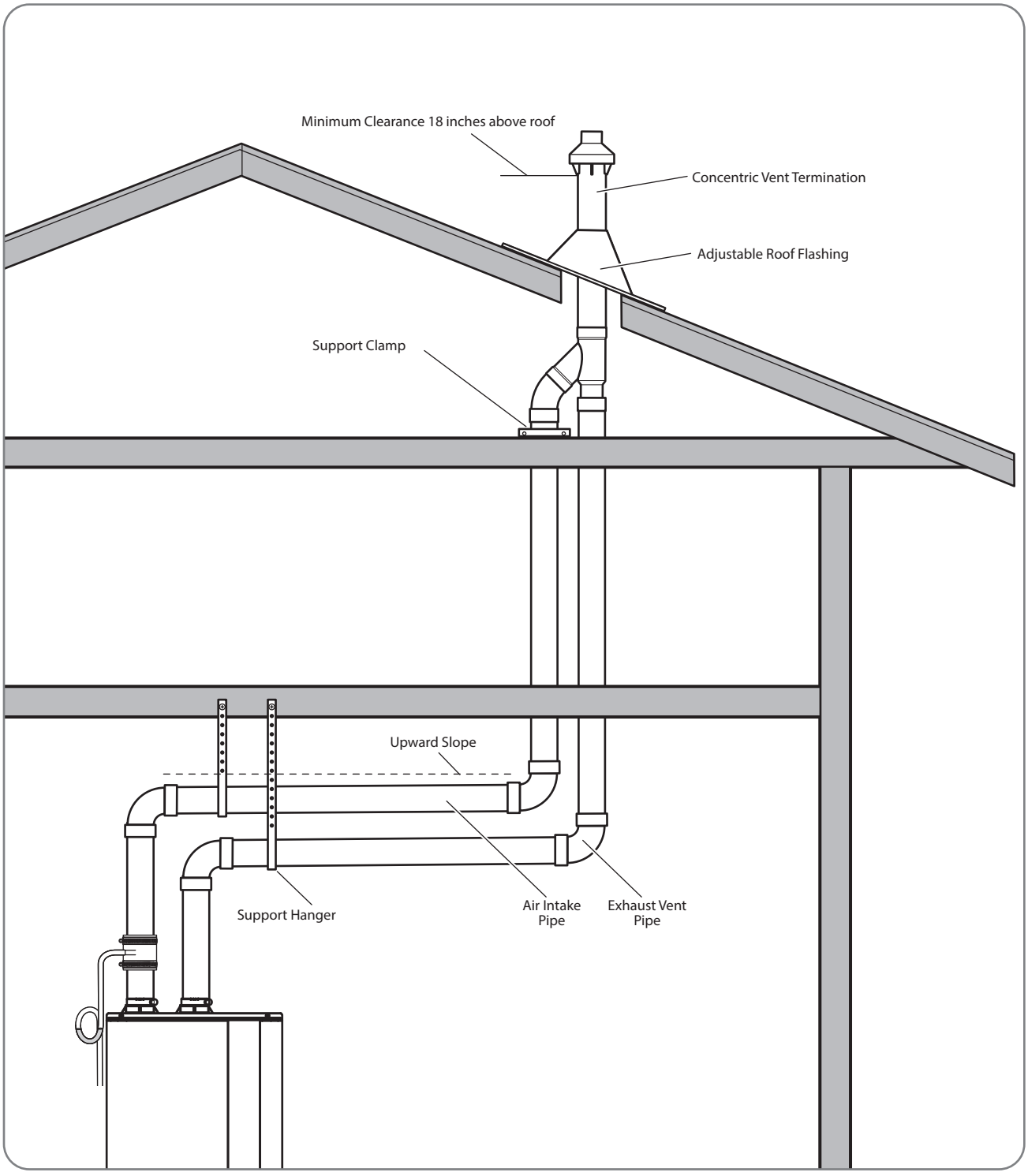

Water Quality

Water quality must be taken into account when installing and maintaining the water heater. Water conditions outside of the levels specified below affect and may damage the water heater. Please note that the limited warranty provided with the water heater does not cover defects, malfunctions or failures resulting from water conditions that are not in accordance with the specifications in the table below.

If you nonetheless install this water heater where the water conditions are not within the levels specified in the table below, Rheem recommends that you take the following steps:

Install a water treatment device or water softener at the same time as the original installation of the water heater. Rheem offers a water treatment accessory that can be installed with the water heater. (See below).

Flush the water heater's heat exchanger regularly. Rheem offers a flush kit and isolation valves to help remove scale build up. (See below)

Chart for Recommended Water Quality Levels									
pH	(Total Dissolved Solids) TDS	Free Carbon Dioxide (CO_2)	Total Hardness	Aluminum	Chlorides	Copper	Iron	Manganese	Zinc
6.5–8.5	Up to 500 mg/L	Up to 15 mg/L	Up to 200 mg/L	0.05 to 0.2 mg/L	Up to 250 mg/L	Up to 1.0 mg/L	Up to 0.3 mg/L	Up to 0.05 mg/L	Up to 5 mg/L

Cited reference: National Secondary Drinking Water Regulations

Accessory part numbers listed below. See Parts and Accessories Catalog for more information.

	Accessory Kit	Replacement Filter		Tankless Flush Kit	Tankless Isolation Valve
AllClear Water Treatment Kit	RTG20251	RTG20252		RTG20124	RTG20220AB
Scale Prevention Device	RTG20246	RTG20247			

Water Supply

Water Supply

⚠CAUTION:

This water heater MUST ONLY be used with the following water supply conditions to prevent product damage and operation failure.

- **Clean, potable water free of corrosive chemicals, sand, dirt, and other contaminates.**
- **Inlet water temperatures above 32°F (0°C), but not exceeding 120°F (49°C).**
- **DO NOT reverse the HOT and COLD water connections.**
- **DO NOT connect this water heater to water lines previously used for space heating. All water piping and components shall be suitable for potable water.**
- **With recommended water quality (See chart above).**

Thermal Expansion

Determine if a check valve exists in the inlet water line. Check with your local water utility company. It may have been installed in the cold water line as a separate back flow preventer, or it may be part of a pressure reducing valve, water meter or water softener. A check valve located in the cold water inlet line can cause what is referred to as a "**closed**" water system. A cold water inlet line with no check valve or back flow prevention device is referred to as an "**open**" water system. As water is heated, it expands in volume and creates an increase in the pressure within the water system. This action is referred to as "**thermal expansion**". In an "open" water system, expanding water and the resulting pressure increase which exceeds the capacity of the water heater, flows back into the city main where the pressure is easily dissipated.

A "**closed**" water system, however, prevents the expanding water from flowing back into the main supply line, and the result of "**thermal expansion**" can create a rapid and dangerous pressure increase in the water heater and system piping. This rapid pressure increase can quickly reach the safety setting of the relief valve, causing it to operate during each heating cycle. Thermal expansion, and the resulting rapid and repeated expansion and contraction of components in the water heater and piping system can cause premature failure of the relief valve, and possibility the heater itself.

NOTICE:

Replacing the relief valve will not correct the problem!

The suggested method of controlling thermal expansion is to install an expansion tank in the cold water line between the water heater and the check valve.

The expansion tank is designed with a built-in air cushion that compresses as the system pressure increases. This relieves the over-pressure condition and eliminates the repeat operation of the relief valve. For other approved methods of thermal expansion, contact an installing contractor, water supplier, or plumbing inspector.

Water Supply Connections

⚠CAUTION:

IMPORTANT—DO NOT apply heat to the HOT or COLD water connections. If sweat connections are used, sweat tubing to the adapter before fitting the adapter to the water connections on the water heater. Any heat applied to the water supply fittings will permanently damage the internal components of the water heater.

NOTICE:

In cold environments, ice can accumulate in the water heater's connectors. Plug in the water heater power cord for approximately 10 minutes before making these connections. This will melt any ice buildup.

Plumbing should be carried out by a qualified plumbing contractor in accordance with local codes.

Only use approved plumbing materials.

To allow the full flow capacity, it is recommended to keep water inlet and outlet pipes 3/4" (1.9 cm) diameter or larger.

To conserve energy and to prevent freezing, insulate both COLD and HOT water supply lines. **DO NOT** insulate the drain line or pressure-relief valve.

Recirculation

Direct recirculation is allowed, provided the loop is thermostatically controlled, and a timer is used to turn the pump off during off peak periods. The pump must be sized for a minimum of 5 gpm at 25 ft of head plus building head. A 10°F difference between the loop thermostat setting and water heater temperature setting must be maintained.

To ensure proper operation of the water heater, follow these water pressure guidelines.

Operation of the water heater requires a minimum water pressure of 14 psi (97 kPa) and a minimum water flow rate of 0.4 gpm (1.5 lpm).

Water pressure of 40 psi (276 kPa) is required to achieve maximum flow rate.

To maintain proper performance, there must be sufficient water supply pressure.Required Water Pressure =

Min. Operating Water Pressure (14 psi [97 kPa])

+ Pipe Pressure Loss

+ Faucet Pressure Loss

+ Safety Margin (more than 5 psi [34 kPa]).

To supply HOT water to upper floors, additional water pressure will be required (0.44 psi [3 kPa] per foot of height). Calculate the distance between the water inlet of the water heater (ground level) to the HOT water faucet farthest away from the water heater (upper floor level).

Well water systems should be set to ensure a minimum system pressure of 40 psi (276 kPa). The pressure should remain constant and stable during the operation of the water heater.

Gravity water pressure is not recommended. When the water is supplied from a water supply tank, the height of the tank, the diameter of the supply pipes, and their relation to water pressure need to be taken into consideration.

Water Supply Installation

NOTICE:

- **Use only Teflon tape on all COLD and HOT water connections.**
- **If the water flow resistance of a showerhead is too high, the burner in the water heater will fail to ignite. Keep all showerheads clean from debris that could cause additional pressure drop.**
- **If using mixing valves on the outlet, choose one that prevents COLD water pressure from overcoming HOT water pressure.**
- **If multiple water heaters are installed in a manifold system, the water piping MUST be in "parallel" and the water pressure at each water heater should be a minimum of 40 psi (276 kPa).**

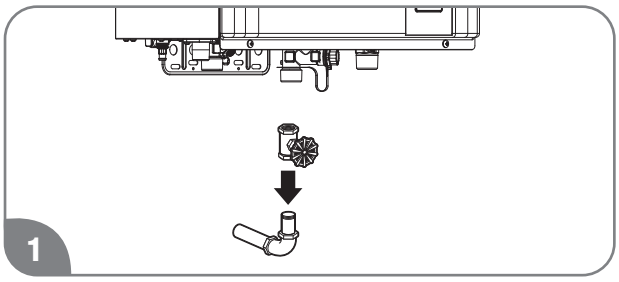

Install a COLD water shut-off valve near the inlet line on the water heater. This valve will be used for servicing and draining purposes.

NOTICE:

It is not recommended to use pipes with smaller diameters than the water supply connection of the water heater.

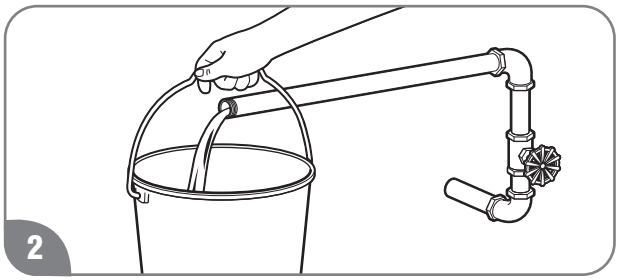

Before attaching the water line to the water heater, open the shut-off valve. Run the water until it has purged all contaminants (sand, debris, air, caulking, etc.).

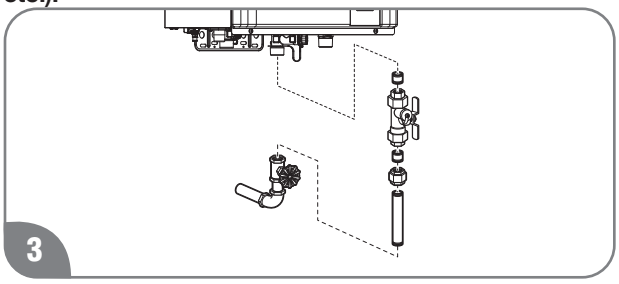

Install a service valve on the end of the COLD water supply line and connect it to the water inlet on the water heater.

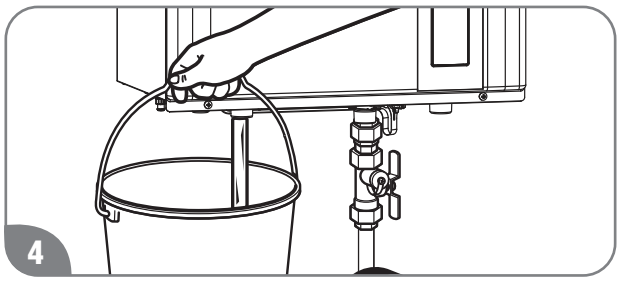

Open the shut-off valve in the COLD water Inlet line to check the water flow through the water heater.

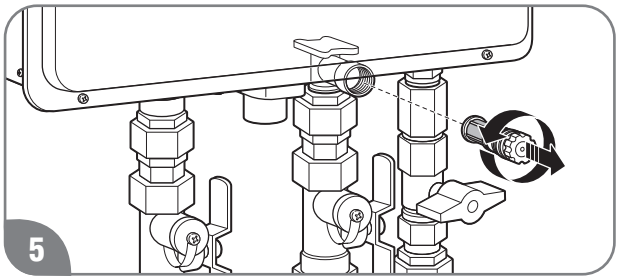

Close the shut-off valve and remove, clean, and replace the water filter.

NOTICES:

- **Be sure to connect the COLD water inlet and the HOT water outlet as shown on the water heater. If reversed, the water heater will not function.**
- **The flow rate of HOT water may vary when more than two faucets (e.g. appliances, fixtures, etc.) are being used simultaneously.**
- **The pipes MUST be completely drainable. If the HOT water faucets are located at a point higher than the water heater, place a drain valve at the lowest point.**

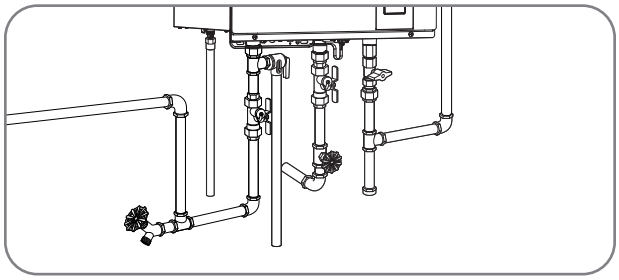

It is recommended to use unions and flexible copper connections at the COLD and HOT water lines. They allow the water heater to be disconnected easily for servicing.

Use the following guidelines when connecting the HOT WATER OUTLET:

Connections between the water heater and point(s) of use should be as short as possible.

Local codes shall govern the piping used for water connections.

To conserve energy and to prevent freezing, insulate both COLD and HOT water supply lines. **DO NOT** insulate drain line or pressure-relief valve.

Water Piping Arrangement With Service Valve Kit

Service valve kits can attach to all tankless water heater systems. All kits include two full-port isolation valves to be used in the COLD and HOT water lines. When installed, these valves allow one person full diagnostic testing and ease of flushing the system. Contact your distributor or place of purchase for availability and installation information.

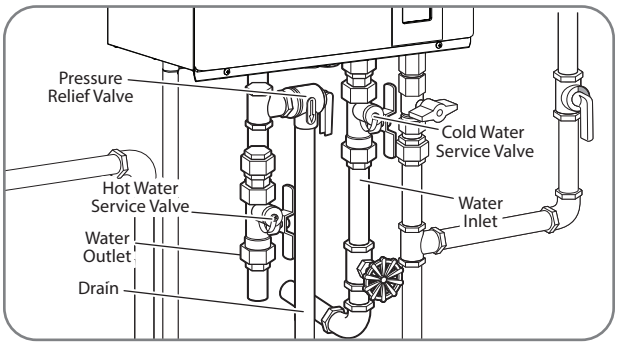

Water Supply (cont.)

Relief Valve

A new pressure-relief valve, complying with the Standard for Relief Valves and Automatic Gas Shut-Off Devices for Hot Water Supply Systems, ANSI Z21.22/CSA 4.4, must be installed at the HOT water outlet connection of the water heater during installation. Local codes shall govern the installation of any relief valve.

NOTICE:

- **The following drawing illustrates a pressure-only relief valve. If local codes require a combination temperature and pressure-relief valve, you may need to install an extension piece to ensure that the valve probe is not directly in the flow path of the water.**
- **A pressure relief valve supplied with this water heater must be installed as shown below.**
- **Manual operation of relief valves should be performed at least once a year.**
- **If the relief valve on the system discharges periodically, a problem exists. Turn off the water heater, unplug the unit, and call for service.**

One end of the relief valve discharge line connects to the HOT water outlet pipe as shown above. The other end of the pipe should be routed to a suitable drain to eliminate potential water damage.

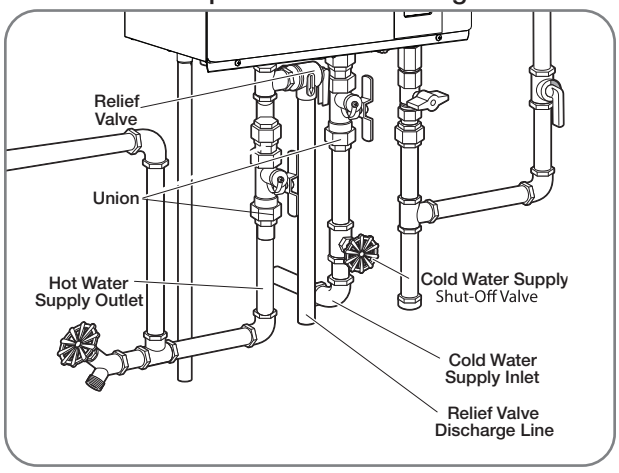

For safe operation of the water heater, be sure that:

The pressure rating of the relief valve must not exceed 150 psi (1,034 kPa) or the maximum working pressure of the water heater. (See the rating plate on the water heater.)

The BTUH rating of the relief valve must equal or exceed the BTUH input of the water heater. (See the rating plate on the water heater.)

No valve of any type should be installed between the relief valve and the water heater.

Discharge from the relief valve should be piped to a suitable drain. Piping used should be of a type approved for the distribution of hot water.

HOT and COLD water lines should be insulated up to the water heater. See "Water Supply Installation".

The discharge line must be NO SMALLER than the outlet of the relief valve. The drain line must pitch downward to allow for complete drainage of the line and the valve.

The end of the discharge line should not be threaded or concealed and should be protected from freezing. No valve of any type, restriction, or reducer coupling should be installed in the discharge line.

Hot and Cold Pipe Insulation Installation

⚠WARNINGS:

- **When pipe insulation is not rated for the appropriate weather conditions, install electric heat tracing or equivalent to prevent freezing of the pipes.**
- **DO NOT insulate or block drain valve on the hot outlet fitting.**
- **If pipes are allowed to freeze, the water heater and the pipes may malfunction or leak due to freezing water.**

NOTICE:

The hot and cold water supply pipes should be insulated to provide additional freeze protection.

For increased energy efficiency, use pipe insulation as shown in the diagram. Insulate the pipes all the way to the top. **DO NOT** cover any drain or pressure-relief valve(s).

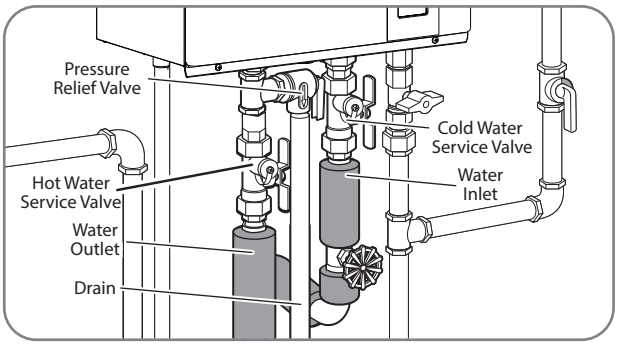

Condensate

Condensate Drainage

It is recommended to install an external neutralizer. Contact a store where this water heater is purchased to purchase an external neutralizer.

⚠ WARNING:

The condensate coming from the water heater is known to be acidic. Without an external neutralizer, metals contacting the condensate can be corroded.

Be sure the condensate runs freely to a drain and does not accumulate inside the water heater. In cold climates, precautions may need to be taken to ensure that the condensate drain does not freeze.

All condensation must be drained and disposed of per local codes and requirements.

If the condensate drain gets blocked, an error code will display on the remote control. If this occurs, the condensate drain must be cleared.

Use only PVC or CPVC pipe or flexible tube for the condensate drain line.

The drain pipe (along its entire length) must be at least the same diameter as the drain line.

The drain line should be as short as possible and have a downward slope toward the end.

The end of the drain pipe should be open to the atmosphere. The end should not be under water or other substances.

DO NOT connect the drain pipe directly to the drain sewer.

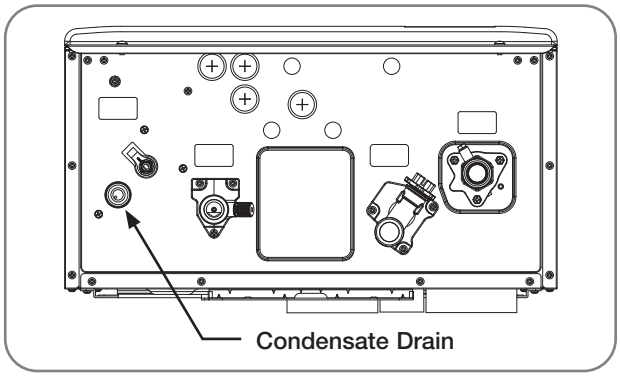

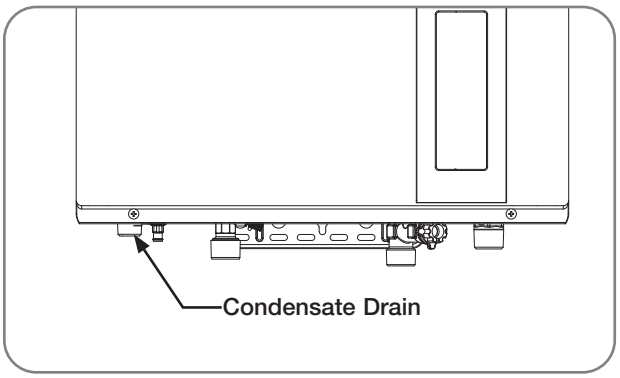

Gas Supply

Gas Supply System

⚠WARNING:

DO NOT attempt to convert this water heater for use with a different type of gas other than the type shown on the rating plate. Doing so could result in death, personal injury, explosion or fire, product damage, and/or poor operating conditions or performance.

NOTICE:

- **Gas piping shall be in accordance with local utility company requirements and/or in the absence of local codes, use the latest edition of National Fuel Gas Code (NFGC), ANSI Z223.1. In Canada, use the latest edition of CAN/CSA B149.1, Natural Gas and Propane installation code.**
- **Apply a thin coat of pipe compound to all threaded male ends. Compound must be of the type resistant to the action of LP gas.**
- **To ensure proper water heater operation, the gas pipe and gas meter must be sized correctly.**
- **If flexible connectors are used, the minimum inside diameter must be 3/4" or greater and the rated capacity of the connector must be equal to or greater than the BTU capacity of the water heater. See manufacturer information for the gas connector. Lengths over 36 inches are not recommended.**
- **DO NOT use excessive force when tightening the pipe sections. Excessive force can damage the water heater, especially when Teflon pipe compound is used.**

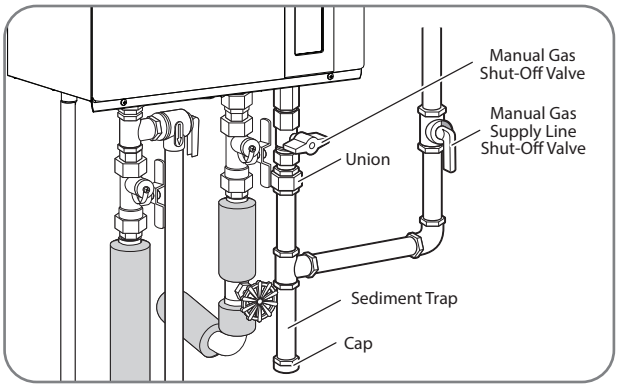

Gas Piping

Pipe-Sizing Procedure – The gas supply system must be properly sized to ensure the proper operation of this tankless water heater as well as all the gas appliances on the system. Failure to ensure the gas system, (meter, regulators, and piping) are properly sized could result in improper operation of this or other gas appliances. Insufficient gas pressure/supply can cause pilot outages, lockouts, or operating conditions that could lead to an appliance failure, improper combustion, carbon monoxide, sooting, or fire. Gas line sizing is based on gas type, the pressure drop in the system, the gas pressure supplied, and the gas line type. For gas pipe sizing in the United States, refer to the National Fuel Gas Code, (NFPA 54, ANSI Z223.1). For Canadian gas pipe sizing, refer to the Natural Gas and Propane Installation Code CAN/CSA B149.1.

These simplified instructions only address low pressure gas systems using Schedule 40 Metallic Pipe (Black Iron). For hybrid gas systems, high pressure main lines with regulators at the appliances, gas systems piped with corrugated stainless steel tubing (CSST), or Propane gas systems.

Determining the required regulator and gas meter size.

Find the BTU capacity of each appliance on the system. This information is located on a rating label attached to the appliance. Total the BTU of all the appliances together and divide that by the heating value of the fuel (for natural gas the average is 1,024 or 2,546 for propane). This will give you the total cubic feet per hour of gas required for the system.

At your gas meter/regulator there will be a rating plate that gives the cubic feet per hour capacity of that equipment. If the total gas required for the system is greater than the rating of the meter/

$$\text{Cubic Feet Per Hour (CFH)} = \frac{\text{Gas Input of Water Heater (BTU/HR)}}{\text{Heating Value of Gas (BTU/FT}^3\text{)}}$$

regulator then the local gas company will need to be contacted in order to upgrade the meter/ regulator for the system.

Gas Supply

Determining the required pipe size.

The gas system is designed to operate at a certain maximum pressure drop. A pressure drop greater than what is permissible can cause operational issues with the gas appliances. The National Fuel Gas Code (NFPA 54, ANSI Z223.1 2012) allows for three pressure drop levels, a 0.3 inch W.C., (see table 2); a 0.5 inch W.C., (see table 3) and a 3.0 inch W.C., (see table 4) pressure drop for natural gas. Only a 0.5 inch W.C. pressure drop is allowable with Propane (see table 5). For Canadian installations the maximum allowable pressure drop is 0.5 inch W.C., (see table 3).

Measure the inlet gas pressure to the system using a manometer. For Natural Gas, if the inlet pressure is less than 8.0 inches W.C. then use Table 2 or 3 for your gas pipe sizing. **Table 4 can only be used if the inlet gas pressure is 8.0 inches W.C. or greater.** Table 4 cannot be used for Canadian installations.

The gas piping system consists of a main trunk line that runs from the meter/regulator and branch lines that run from the trunk line to the individual appliances. A branch may carry gas for more than one appliance.

The trunk line must be sized to carry the entire load of all the gas appliances on the system. As with determining the meter/regulator size, total the BTU of all the appliances together and divide that by the heating value of the fuel (for natural gas the average is 1,024 or 2,546 for propane). This will give you the total cubic feet per hour of gas required for the trunk line. Measure the total length of the line Refer to Table(s) 2, 3, or 4 and find the number closest to but higher than the total cubic feet per hour requirement calculation. This will tell you the minimum size that the trunk line must be.

Each branch line must be sized to carry the load of the appliance(s) attached to it. If more than one appliance is on a branch total the BTU and as with the trunk line divide that by the heating value of the fuel. Refer to Table(s) 2, 3, or 4 and find the number closest to but higher than the total cubic feet per hour requirement calculation for the branch and appliance(s). This will tell you the minimum size for that branch line and appliance.

Final Considerations

If this water heater is replacing an existing water heater, it is important to verify the capacity of the gas system. Check the capacity of the meter/regulator, and verify the pipe lengths and sizes.

An improperly sized gas system will cause operational issues with this water heater. Other appliances on the gas system may be affected as well.

Flexible Gas Connectors may be used however the BTU capacity of the connector must be checked. Each connector has a capacity label on it, verify that the connector has a BTU capacity greater than that of the water heater. An undersized flexible gas connector will cause operational issues with this water heater.

Half-inch gas lines are permissible provided the gas system meets certain requirements. **First, the gas pressure on the system must be 8.0 inch W.C. or greater.** Second the capacity of the pipe as outlined in Table 4 is followed. If the existing pipes are too small it could cause a pressure drop greater than 3.0 inch W.C. and will cause operational issues with this water heater as well as other gas appliances on the system.

Gas Supply

This is an example, in US, refer to current National Fuel Gas Code, NFPA 54 for correct pipe sizing chart, and in Canada, refer to current Natural Gas and Propane Installation Code CAN/CSA B149.1.

Table 2 - Pipe-Sizing - Natural Gas

Schedule 40 Metallic Pipe (Black Iron)
Inlet System Pressure: Less than 2 PSI (55 inches W.C.)
Allowable Pressure Drop: 0.3 inches W.C.
Specific Gravity : 0.60
(Capacity in cubic feet per hour)

Length	Pipe Size (Inches)				
	½	¾	1	1¼	1½
10	131	273	514	1,060	1,580
20	90	188	355	726	1,090
30	72	151	284	583	873
40	62	129	243	499	747
50	55	114	215	442	662
60	50	104	195	400	600
70	46	95	179	368	552
80	42	89	167	343	514
90	40	83	157	322	482
100	38	79	148	304	455

Information in this chart obtained from NFPA 54, ANSI Z223.1 - 2012 Table 6.2(a)

Table 3 - Pipe-Sizing - Natural Gas

Schedule 40 Metallic Pipe (Black Iron)
Inlet System Pressure: Less than 2 PSI (55 inches W.C.)
Allowable Pressure Drop: 0.5 inches W.C.
Specific Gravity : 0.60
(Capacity in cubic feet per hour)

Length	Pipe Size (Inches)				
	½	¾	1	1¼	1½
10	172	360	678	1390	2090
20	118	247	466	957	1430
30	95	199	374	768	1150
40	81	170	320	657	985
50	72	151	284	583	873
60	65	137	257	528	791
70	60	126	237	486	728
80	56	117	220	452	677
90	52	110	207	424	635
100	50	104	195	400	600

Information in this chart obtained from NFPA 54, ANSI Z223.1 - 2012 Table 6.2(b)

Table 4 - Pipe-Sizing - Natural Gas

Schedule 40 Metallic Pipe (Black Iron)
Inlet System Pressure: 8.0 inches W.C. or greater, but Less than 2 PSI (55 inches W.C.)
Allowable Pressure Drop: 3.0 inches W.C.
Specific Gravity : 0.60
(Capacity in cubic feet per hour)

Length	Pipe Size (Inches)				
	½	¾	1	1¼	1½
10	454	949	1,787	3,669	5,497
20	312	652	1,228	2,522	3,778
30	250	524	986	2,025	3,778
40	214	448	844	1,733	2,597
50	190	387	748	1,536	2,302
60	172	360	678	1,392	2,085
70	158	331	624	1,280	1,919
80	147	308	580	1,191	1,785
90	138	289	544	1,118	1,675
100	131	273	514	1,056	1,582

Information in this chart obtained from NFPA 54, ANSI Z223.1 - 2012 Table 6.2(c)

Table 5 - Pipe-Sizing - Undiluted Propane

Schedule 40 Metallic Pipe (Black Iron)
Inlet System Pressure: 11 inches W.C.
Allowable Pressure Drop: 0.5 inches W.C.
Specific Gravity : 1.5
(Capacity in cubic feet per hour)

Length	Pipe Size (Inches)				
	½	¾	1	1¼	1½
10	291	608	1150	2350	3520
20	200	418	787	1620	2420
30	160	336	632	1300	1940
40	137	287	541	1110	1660
50	122	255	480	985	1480
60	110	231	434	892	1340
80	101	212	400	821	1230
100	94	197	372	763	1140
125	89	185	349	716	1070
150	84	175	330	677	1010

Information in this chart obtained from NFPA 54, ANSI Z223.1 - 2012 Table 6.3(d)

Gas Supply

Gas Supply Installation

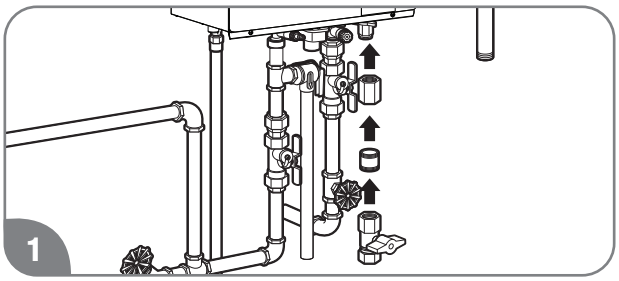

Install the manual gas appliance shut-off valve to the gas connection at the water heater.

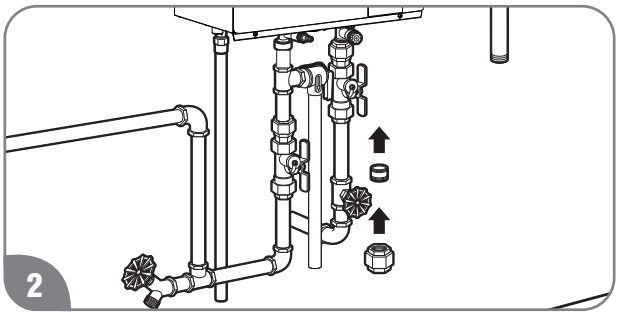

Install a ground joint union or ANSI design-certified semi-rigid or flexible gas appliance connector to the open end of the manual gas appliance shut-off valve. The NFGC, ANSI Z223.1 and CAN/CSA B149.1 codes mandate the use of manual gas shut-off valve.

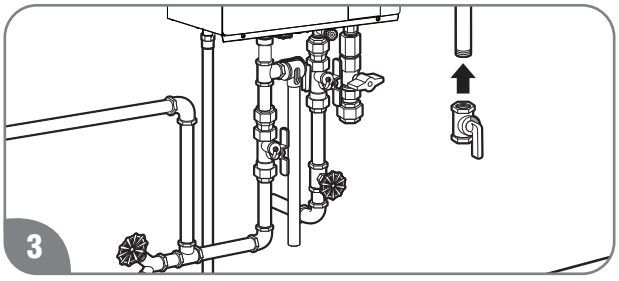

Install a manual gas supply line shut-off valve to the end of the gas supply line.

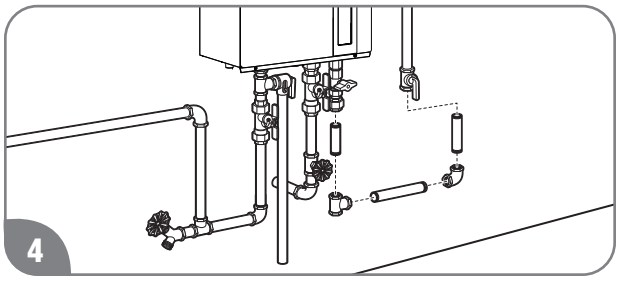

Using the proper-size piping, fittings, and components, build the gas supply line to the water heater.

NOTICE:

The gas supply line should be a minimum of 3/4-in. (1.9-cm) black steel pipe or other approved gas piping material.

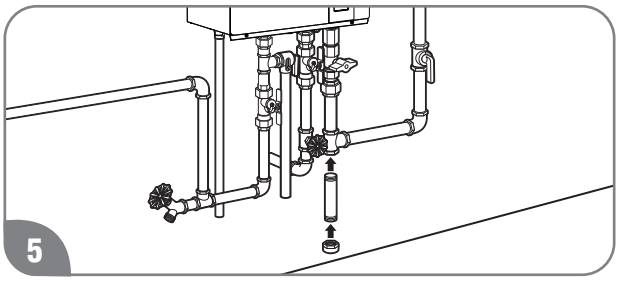

Install a sediment trap at the lowest portion of the gas line.

The inlet gas pressure to the water heater must NOT exceed 10.5 in. w.c. (2.6 kPa) for natural gas and 13 in. w.c. (3.2 kPa) for LP gas. For purposes of input adjustment, the minimum inlet gas pressure (with main burner on) is shown on the water heater rating plate. If high or low gas pressures are present, contact your gas supplier for correction.

Gas Supply

Leak Testing

⚠WARNING:

Never use an open flame to test for gas leaks, because death, personal injury, and/or property damage can result.

The water heater and its gas connections MUST be leak-tested at normal operating pressures before the unit is placed in operation. These tests should also include all factory connections.

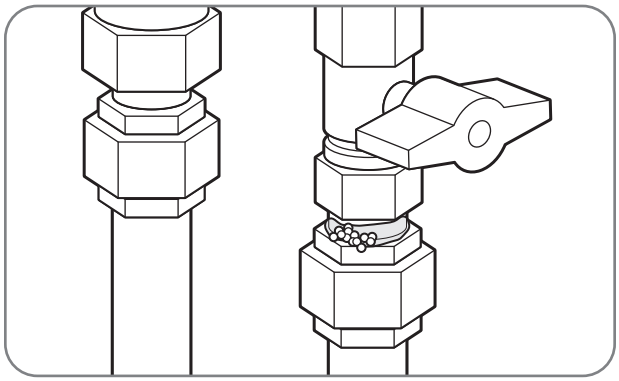

- **Turn on the gas shut-off valve(s) to the water heater.**
- **Use a soapy water solution to test for leaks at all the connections and fittings. If bubbles are seen,it indicates a gas leak that must be corrected.**
- **Contact a qualified service technician.**

Pressure Testing the Gas Supply System

⚠WARNING:

If inlet gas pressure is out of allowable range [4.0" w.c. (1.0kPa) – 10.5" w.c. (2.6kPa)] for Natural Gas, or [8.0" w.c. (2.0kPa) – 13.0" w.c. (3.2kPa)] for LP gas, a gas pressure regulator must be installed to maintain the allowable inlet gas pressure.

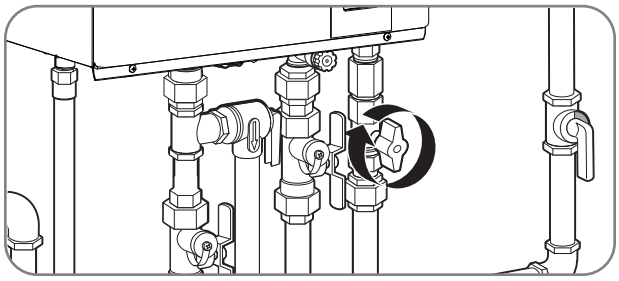

The water heater and its manual gas shut-off valve must be disconnected from the gas supply piping system during any pressure testing of the system at test pressures in excess of 1/2 psi (3.5 kPa).

The water heater must be isolated from the gas supply piping system by closing the manual gas shut-off valve during any pressure testing of the gas supply piping system at test pressures equal to or less than 1/2 psi (3.5 kPa).

Gas Supply

High-Altitude Installation

The water heater is certified for installations up to 7,800 ft. (610 m) above sea level. The input rating of this water heater is based on sea level operation. At higher elevations, the actual input rate may be lower than the value listed on the rating label due to the derating of Natural Gas and LP Gas.

NOTICE:

For installations above 2000 ft. (610 m) elevation, contact a qualified service technician to make the proper altitude adjustments. See "Vent Length and High-Altitude DIP Switch Adjustments" for additional information.

⚠WARNING:

DO NOT install this water heater at elevations above 2000 ft. (610 m) without the proper adjustments. Please contact your installer, local gas supplier, place of purchase, or the Rheem Customer Service phone number listed in the *"Call for Assistance"* **section.**

Electrical Wiring

⚠DANGER:

Shock Hazard – Before servicing the water heater, turn off the electrical power to the water heater at the main disconnect or circuit breaker. Failure to do so will result in death or serious personal injury.

⚠WARNING:

Field wiring connections and electrical grounding must comply with local codes or, in the absence of local codes, with the latest edition of the National Electrical Code, ANSI/NFPA 70, or in Canada, Canadian Electrical Code, CAN/CSA C22.1, Part 1.

⚠CAUTION:

Label all wires prior to disconnecting is recommended. Wiring errors can cause personal injury, product damage, and/or dangerous operating conditions. Verify correct operation after servicing.

NOTICE:

- **DO NOT connect power until venting installation is complete (see Venting Installation).**
- **Wait ninety (90) seconds after power is connected for the first time to initiate operation of the water heater.**

Power consumption is up to 100 Watts during normal operation, 3-5 Watts during standby, waiting to run, and up to 200 Watts during the freeze protection operation.

Power Cord

The electric power supply requirement for this water heater is 120 VAC/60 Hz, 2 amps.

A dedicated circuit is recommended for the water heater. **DO NOT** connect to a GFCI or AFCI circuit. Multiple units may be connected to a single circuit up to the circuit rating.

DO NOT use 3-prong to 2-prong adapters. **DO NOT** use power strips or multiple outlet adapters.

All direct-vent gas models come with a 3-prong power cord. Only use this power cord and a matching grounded electrical outlet.

All outdoor gas models **DO NOT** come with a power cord. Only hard-wire to an appropriate power outlet with a ground terminal.

Keep any excess length of the power supply cord on the outside of the water heater.

If local codes require hard-wiring, see instructions for "Hard-Wiring the Electrical Connections" below.

Hard-Wiring the Electrical Connections

Wiring should be performed by a qualified electrician in accordance with local codes.

The water heater requires a properly grounded 120 VAC/60 Hz dedicated power supply. Multiple water heaters may be connected to a single circuit up to that circuit's rating.

DO NOT connect grounding wire to water pipes, gas pipes, telephone cables, lighting conductor circuits, or to any other grounding circuits that require a GFCI or AFCI (arc fault circuit interrupter).

An ON/OFF switch must be provided and installed for the incoming 120 VAC power supply.

Wire the water heater exactly as shown in the wiring diagram. This wiring diagram can also be found inside the water heater cover panel.

The green screw is provided in the enclosure for a grounding connection.

Connect the live wire to the black wire and neutral wire to the white neutral wire.

Electrical Wiring

Wiring Diagram

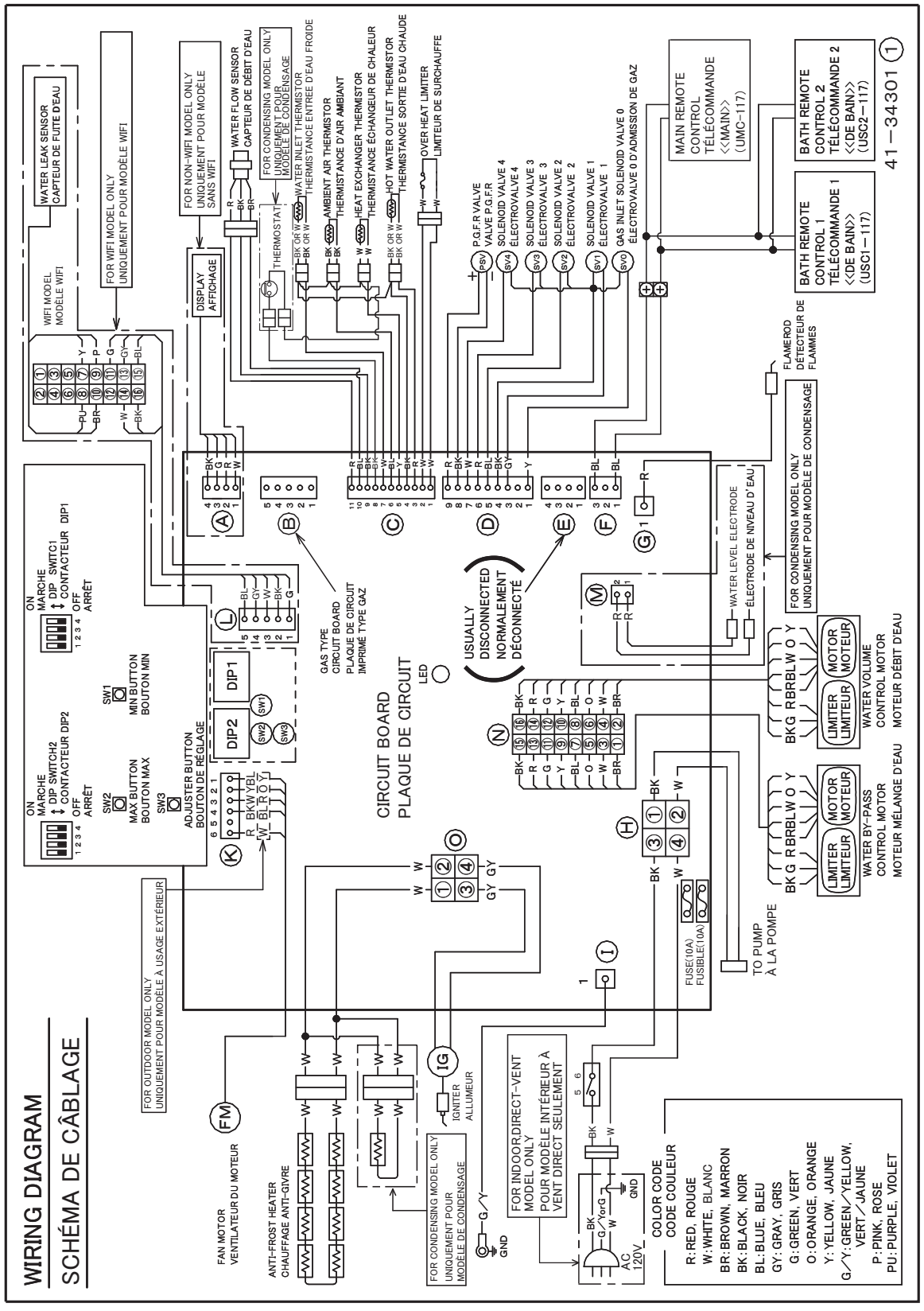

Insulation Blankets

In general, insulation blankets for external use on gas water heaters are not necessary. The purpose of an insulation blanket is to reduce the standby heat loss from the water heater's storage tank. Since these water heaters **DO NOT** store water, they eliminate the need for the insulation blanket.

⚠WARNING:

Never cover the air inlet, flue outlet, or operating and warning labels attached to the water heater. Covering these components will cause dangerous operating conditions that can lead to death, personal injury, property damage, and/or product damage.

The manufacturer's warranty does not cover any damage or defect caused by insulation, insulation attachment, or use of any type of energy-saving or other unapproved devices (unless authorized by the manufacturer). The use of unauthorized energy-saving devices can result in death, personal injury, and/or property damage. The manufacturer disclaims any responsibility for such loss or injury resulting from the use of such unauthorized devices.

Installation Precautions

Follow all installation instructions covered in this manual.

Check the inlet gas pressure to make sure it is within the range specified on the rating plate.

Make sure there is adequate air for combustion and ventilation as described on "Venting" in this manual.

Maintain proper clearances to combustibles and noncombustibles as specified on the rating plate.

Make sure the venting system complies with local codes, National Fuel Gas Code (ANSI Z223.1/NFPA 54) or Natural Gas and Propane Installation Code (CAN/CSA B149.1), and the guidelines found on "Venting" in this manual.

Make sure the heater and remote control are properly fastened to their mounting surfaces.

Make sure the heater and remote control are wired in accordance with all regulations and codes without any exposed connections.

Contact the local gas company to make sure the gas meter and gas piping are adequately sized.

Use only Teflon tape on all male water line connections and fittings.

DO NOT block or restrict any outside air intake openings.

DO NOT remove the front cover unless absolutely necessary. This should only be done by a qualified service technician.

DO NOT install this product where standing water may occur.

DO NOT use pipe dope on water line connections and fittings.

DO NOT use Teflon tape on gas line connections and fittings in US.

Installation Checklist

A. Water Heater Location

- ☐ Indoor water heaters must be installed indoors.
- ☐ Outdoor water heaters must be installed outdoors.
- ☐ Close to area of ventilation termination (indoor models).
- ☐ Protected from freezing temperatures.
- ☐ Proper clearance from combustible material observed.
- ☐ Sufficient fresh air supply for proper operation of water heater.
- ☐ Air supply free of corrosive elements and flammable vapors.
- ☐ Provisions made to protect area from water damage.
- ☐ Sufficient room to service heater.
- ☐ Combustible materials, such as clothing, cleaning materials, and rags clear of the heater and vent piping.
- ☐ Water heater is properly secured to the wall.

B. Vent (Indoor Models)

- ☐ Vent pipe material is ULC S636 approved and manufacturer-approved.
- ☐ Horizontal air intake pipe and exhaust pipe have a 1/4" per foot UPWARD slope toward the vent terminal.
- ☐ Vertical venting is installed as described in the "Vertical Vent Installation section.
- ☐ Connection(s) securely fastened together with cement and airtight.
- ☐ All vent runs are properly installed.
- ☐ Vent terminal is properly installed.
- ☐ Maximum vent length is observed.
- ☐ DIP Switches are properly adjusted per vent length and elevation

C. Water Supply/Relief Valve

- ☐ Water supply has sufficient pressure.
- ☐ Air has been purged from the water heater and the piping.
- ☐ Water connections tight and free from leaks.
- ☐ Water filter is clean and in place.
- ☐ All piping has been assembled as described on "Water Supply".
- ☐ Water pipes are insulated and protected from freezing, if necessary.
- ☐ Pressure-relief valve properly installed with discharge line running to open drain.
- ☐ Discharge line protected from freezing, if necessary.

D. Gas Supply

- ☐ Gas type matches listing on rating plate.
- ☐ Gas supply pressure is sufficient for the water heater.
- ☐ Gas line equipped with shut-off valve, union and sediment trap as described on "Gas Supply System".
- ☐ Approved pipe-joint compound has been used on all gas pipe connections.
- ☐ All connections and fittings have been checked for leaks with a soapy water solution.
- ☐ Gas company inspected installation (if required).

E. Electrical Wiring

- ☐ Supply cord and/or wiring meets all local codes, National Electrical Code, ANSI/NFPA 70, in the U.S., or Canadian Electrical Code, CAN/CSA C22.1, Part 1, in Canada.
- ☐ Voltage matches listing on rating plate.
- ☐ Water heater is properly grounded.

F. Condensate

- ☐ Condensate drain is properly routed to an external neutralizer or corrosive resistant drain, if applicable.

Activating the Water Heater

⚠WARNING:

Before operating this water heater, be sure to read and follow the instructions on the following label, all labels on the water heater, and the "*Important Safety Information*" section in this manual. Failure to do so can result in unsafe operating conditions that can result in death, personal injury, property damage, and/or product damage.

FOR YOUR SAFETY READ BEFORE OPERATING

⚠**WARNING** : If you do not follow these instructions exactly, a fire or explosion may result causing property damage, personal injury or loss of life.

A. This appliance does not have a pilot. It is equipped with an ignition device which automatically lights the burner. DO NOT try to light the burner by hand.

B. BEFORE OPERATING smell all around the appliance area for gas. Be sure to smell next to the floor because some gas is heavier than air and will settle on the floor.

WHAT TO DO IF YOU SMELL GAS

● DO NOT try to light any appliance. ● DO NOT touch any electric switch; DO NOT use any phone in your building. ● Immediately call your gas supplier from a neighbor's phone. Follow the gas supplier's instructions. ● If you cannot reach your gas supplier, call the fire department. ● DO NOT return to your home until authorized by the gas supplier or fire department.

C. Use only your hand to push in or turn the gas control knob. Never use tools. If the knob will not push in or turn by hand, don't try to repair it, call a qualified service technician. Force or attempted repair may result in a fire or explosion.

D. DO NOT use this appliance if any part has been under water. Immediately call a qualified service technician to inspect the appliance and to replace any part of the control system and any gas control which has been under water.

OPERATING INSTRUCTIONS

1. STOP! Read the safety information above on this label.
2. Turn off all electric power to the appliance.
3. DO NOT attempt to light the burner by hand.
4. Turn the Gas Shutoff Valve located on the outside of the unit clockwise ↷ to the "OFF" position.

GAS SHUTOFF VALVE

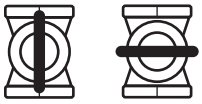

OPEN CLOSE

5. Wait five (5) minutes to clear out any gas. If you then smell gas, STOP! Follow "B" in the safety information above on this label. If you don't smell gas, go to the next step.
6. Turn the Gas Shutoff Valve located on the outside of the unit counterclockwise ↶ to the "ON" position.
7. Turn on all electric power to the appliance.
8. If the appliance will not operate, follow the instructions "To Turn Off Gas To Appliance" and call your service technician or gas supplier.

TO TURN OFF GAS TO APPLIANCE

1. Turn off all electric power to the appliance if service is to be performed.
2. Turn the Gas Shutoff Valve located on the outside of the unit clockwise ↷ to the "OFF" position.

USING YOUR WATER HEATER

Activating the Water Heater

Operating Instructions

Read, understand, and follow the safety information listed on the operating label and in the "Important Safety Information" section in this manual.

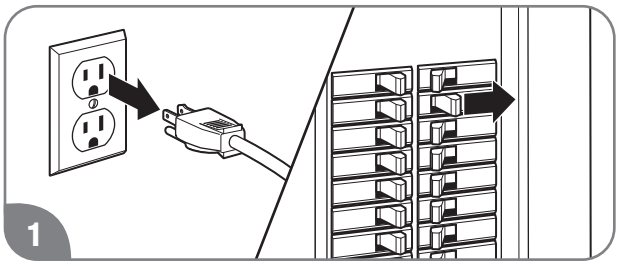

Disconnect all electric power to the water heater.

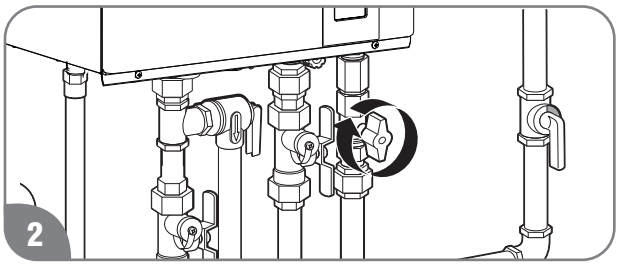

Turn the gas shut-off valve clockwise to the OFF position. This valve is located on the outside of the water heater. Wait 5 minutes to clear any gas. If you don't smell gas, proceed to Step 3.

NOTICE:

If you smell gas, STOP and follow the safety instructions listed under B on the operating label or on the front cover of this manual.

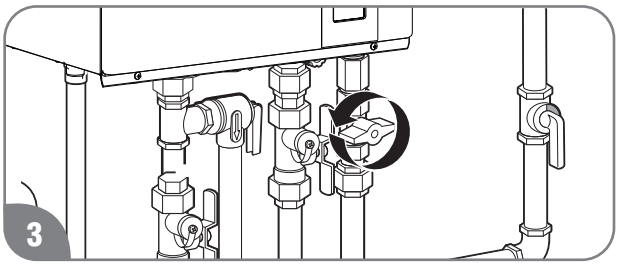

Turn the gas shut-off valve counterclockwise to the ON position.

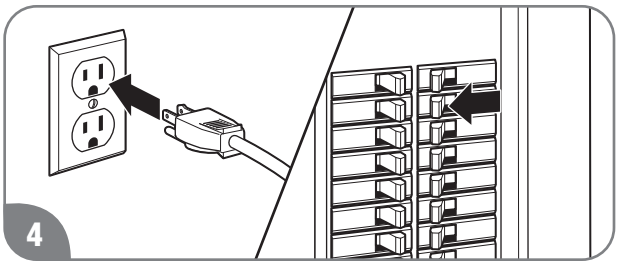

Turn on all electric power to the water heater. The remote control must be powered on prior to operating the water heater.

⚠WARNING:

DO NOT attempt to light the burner by hand. Lighting the burner by hand is an unsafe operating condition that can result in death, personal injury, property damage, and/or product damage.

If the water heater burner will not light, turn off the water heater as described below and call your service technician or gas supplier.

Shutting Off the Water Heater

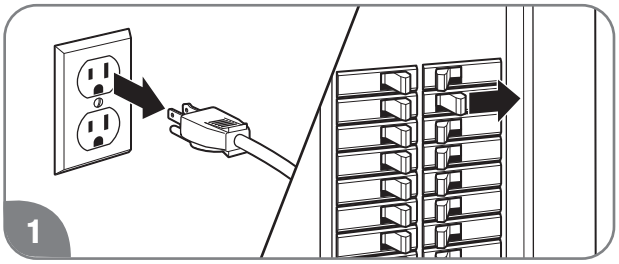

Disconnect all electric power to the water heater.

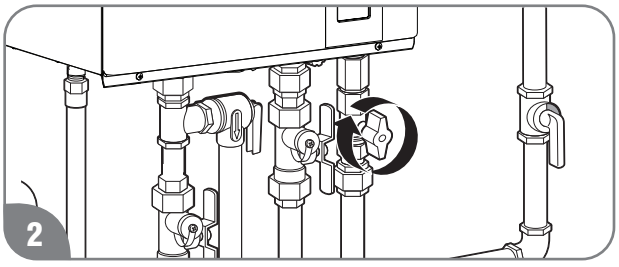

Turn the gas shut-off valve clockwise to the OFF position.

Safety Precautions

⚠WARNING:

- **Flammable vapors can be drawn by air currents from surrounding areas to the water heater. Vapors can ignite causing death, personal injury, or product damage.**
- **DO NOT store or use flammable or combustible materials (gasoline, paint thinner, adhesives, solvents, newspapers, rags, mops, etc.) in the vicinity of the water heater or any other gas appliance. If they must be used, open doors and windows for ventilation, and shut off all gas-burning appliances, including their pilot lights.**
- **DO turn off manual gas shut-off valve if water heater has been subjected to overheating, fire, flood, physical damage, or if the gas supply fails to shut off.**
- **DO NOT turn on water heater unless water and gas supplies are completely opened.**
- **DO NOT turn on water heater if cold water supply shut-off valve is closed.**
- **If there is any difficulty in understanding or following the operating and care instructions in this manual, it is recommended that you contact a qualified service technician to perform the work.**

Setting the Water Temperature

⚠DANGER:

Water temperatures above 125°F (52°C) will result in death and/or severe burns from scalding.

Safety and energy conservation are factors to be considered when selecting the water temperature setting. The temperature of the water in the water heater can be regulated by setting the temperature on the front of the remote control. Be sure to read and follow the warnings outlined on the pictured label.

The recommended setting for the water temperature is 120°F (49°C). The remote control has been preset and shipped at the recommended temperature setting.

Safety factors should be considered whenever altering the water temperature setting. The chart below may be used as a guide in determining the proper water temperature for your home.

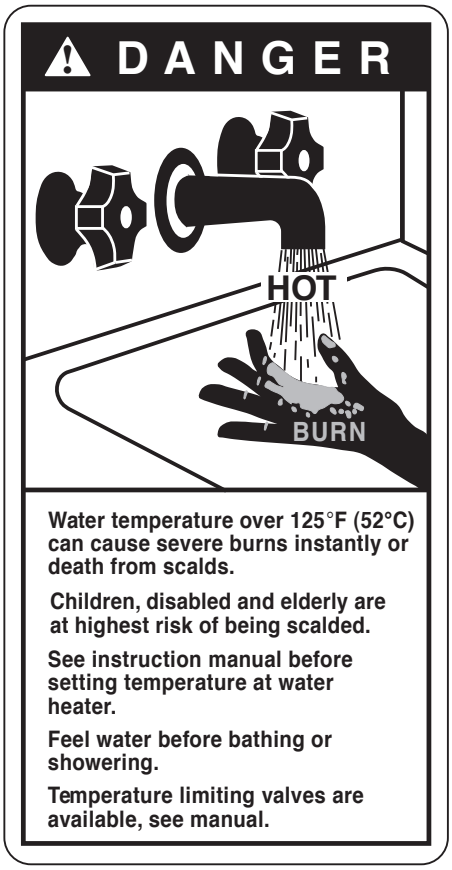

Time/Temperature Relationship in Scalds

Water Temperature	Time to Produce a Serious Burn
120°F (49°C)	More than 5 minutes
125°F (52°C)	1 1/2 to 2 minutes
130°F (54°C)	About 30 seconds
135°F (57°C)	About 10 seconds
140°F (60°C)	Less than 5 seconds
145°F (63°C)	Less than 3 seconds
150°F (66°C)	About 1 1/2 seconds
155°F (68°C)	About 1 second

Table courtesy of Shriners Burn Institute

USING YOUR WATER HEATER

Maximum water temperature occurs while the water heater burner is ON. To determine the water temperature:

Turn on the hot water faucet and place a thermometer in the water stream.

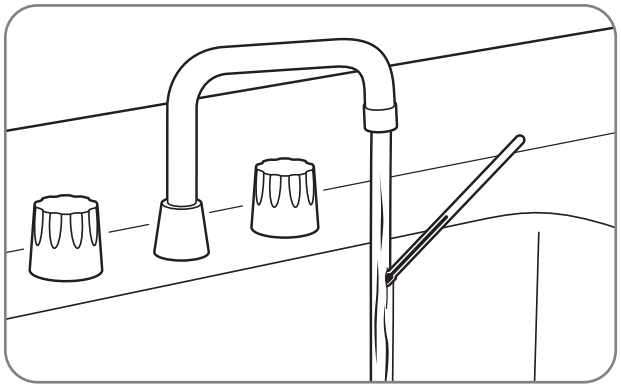

NOTICE:

Water temperature at the faucet may vary depending on the season and the length of pipe from the water heater.

The display control temperature range is between 100°F (38°C) and 140°F (60°C). To adjust the temperature to a desired setting, press the UP or DOWN adjustment button on the face of the remote control. The new temperature set point will show on the LED display.

NOTICE:

The temperature set point by default cannot be increase above 120°F (49°C).

To achieve temperatures above 120°F (49°C), refer page 56 in this Use & Care manual.

The water heater may not operate with a small water flow. Increase the water flow and recheck. If it still does not operate with the hot water faucet completely open, increase the temperature setting on the water heater.

Water Heater Facts

⚠DANGER:

Water temperatures above 125°F (52°C) will result in death and/or severe burns from scalding.

- **The hottest temperature water will be at the faucet closest to the water heater.**
- **Always remember to test the water temperature with your hand before use.**
- **Always supervise young children or others who are incapacitated.**
- **The water heater is equipped with a device that will shut off the gas supply to the burner if the water heater exceeds normal operating temperatures.**
- **Any water heater that has been subjected to fire, flood, physical damage, or been under water should be turned off at the manual gas shut-off valve and not used until it has been checked by qualified service personnel.**

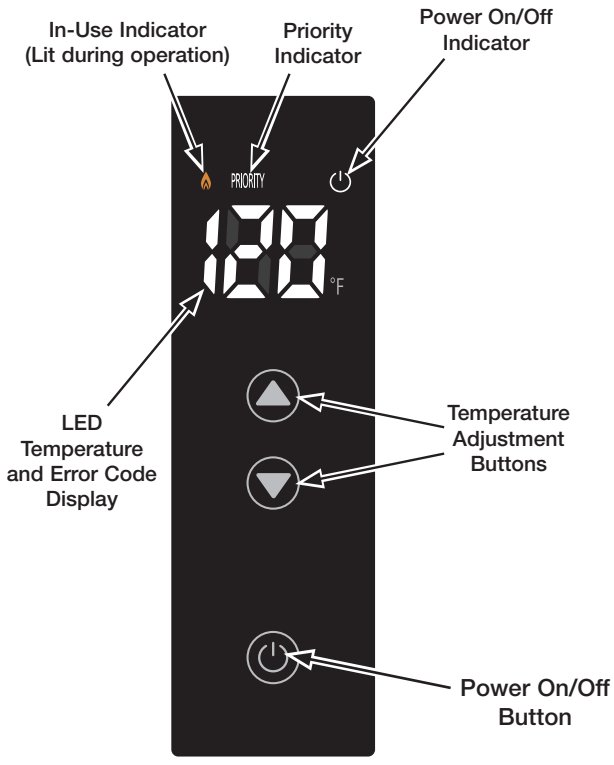

LED DISPLAY

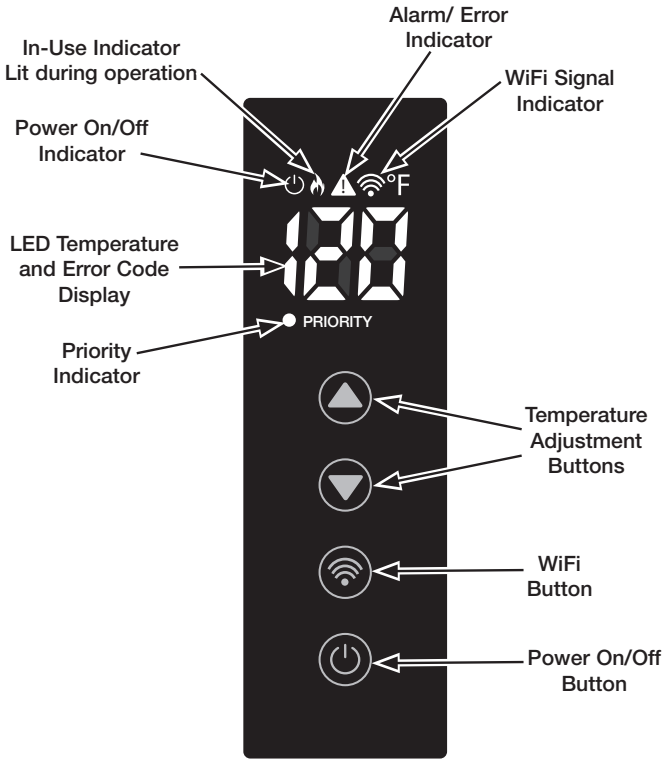

LED WiFi DISPLAY
(WiFi model only)

Setting the Water Temperature

⚠WARNING:

Improper adjustment, alteration, service, or maintenance can result in death, personal injury, property damage, and/or product damage.

Maximum Temperature Adjustment by the Main Display Control

⚠DANGER:

Water temperatures above 125°F (52°C) will result in death and/or severe burns from scalding.

⚠WARNING:

Refer to chart below and the scald potential warnings on page 4 on this manual before making an adjustment. Changing this setting is done at your own risk.

Time/Temperature Relationship in Scalds

Water Temperature	Time to Produce a Serious Burn
120°F (49°C)	More than 5 minutes
125°F (52°C)	1 1/2 to 2 minutes
130°F (54°C)	About 30 seconds
135°F (57°C)	About 10 seconds
140°F (60°C)	Less than 5 seconds
145°F (63°C)	Less than 3 seconds
150°F (66°C)	About 1 1/2 seconds
155°F (68°C)	About 1 second

Table courtesy of Shriners Burn Institute

Residential water heater temperatures can be adjusted up to 140°F (60°C). **DO NOT** perform the following adjustment if a setting of up to 140°F (60°C) is not required.

Temperature Conversion Chart °F/°C							
°F	100	102	104	106	108	110	112
°C	38	39	40	41	42	43	44
°F	114	116	118	120	125	130	140
°C	46	47	48	49	52	54	60

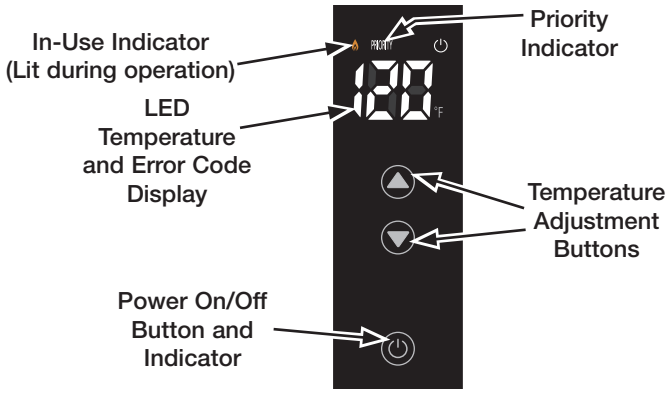

To adjust the set temperature above 120°F (49°C), please refer the following steps.

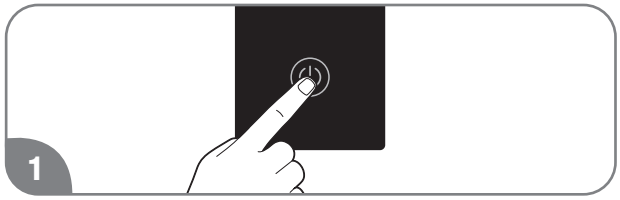

Turn on the control.

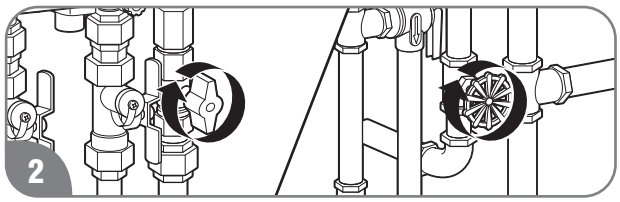

Turn off the gas and water to the water heater by closing the shut-off valves.

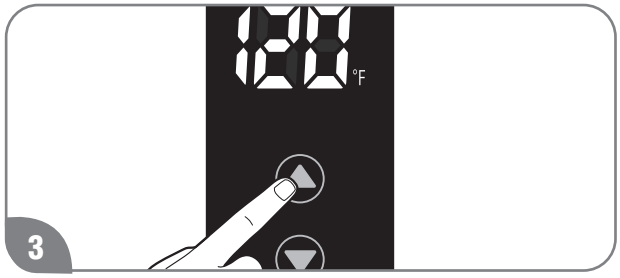

Press the UP adjustment button repeatedly until 120°F (49°C) shows in the LED display.

NOTICE:

LED display only shows °F.

USING YOUR WATER HEATER

Setting the Water Temperature

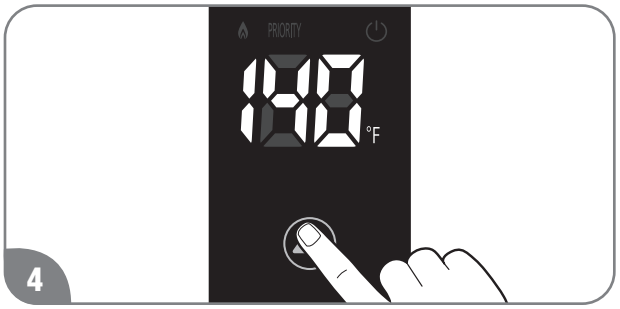

While "120" is shown on LED display, press and hold UP button for 5 seconds. "140" is shown on the LED display.

If need to disable the ability to set above 120°F, please refer the following steps:

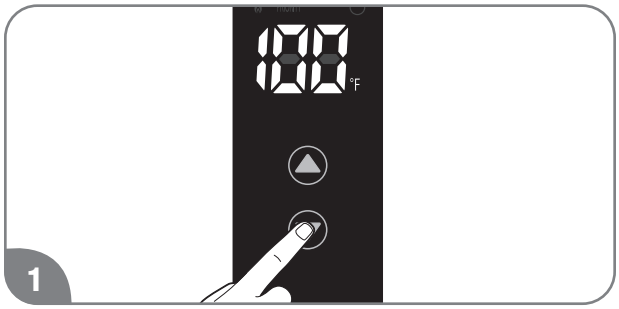

Press DOWN button until "100" appears.

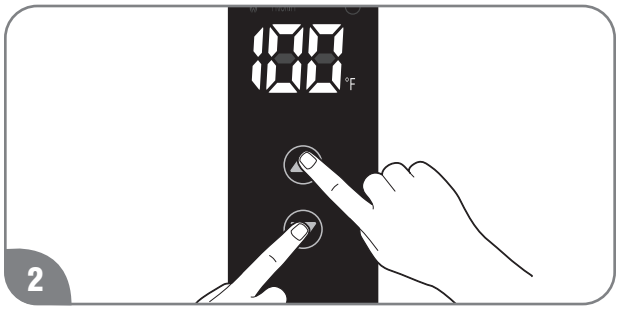

Press and hold DOWN button for 2 seconds.

While holding the DOWN button, press the UP button. Release both buttons.

WiFi Setup

1. Download the EcoNet app to your mobile device and ensure that the device is connected to the WiFi network.
2. Press and hold the WiFi button on the display until the WiFi indicator begins flashing .
3. Open the EcoNet application and follow the instructions on the application to connect the water heater.

Recirculation Pump Control

Local codes or plumbing authority requirements may vary from the instructions or diagrams provided in this manual and take precedence over these instructions.

Recirculation Mode

Your tankless water heater has the ability to control an external recirculation pump which recirculates the water in the plumbing system to provide hot water more quickly when a faucet is opened.

Two modes are available:

- Timer recirculation (Energy Saver Mode)
- Timer recirculation (Performance Mode)

If this water heater has wifi capability, additional two modes are available:

- On-Demand recirculation
- Schedule recirculation

Information for setting up these modes can be found in the EcoNet App.

NOTICE:

Recirculation control is for residential application only. Recirculation control cannot be used with an air handler or with multiple water heater installations. The maximum temperature setting is 140°F (60°C) in recirculation control.

Pump Requirements

Voltage: 120V, 60Hz

In-rush current: Less than 2.5 amps

Amperage: less than 2.0 amps

⚠ WARNING:

A control board can be damaged if amperage exceeds 2.0 amps.

Pump Size

The pump should be sized for about 2.5 gpm at the pressure drop through the tankless water heater and the supply and return plumbing in the recirculation loop. Contact service department listed on page 76 of this use and care manual if you need more information.

Recommend size and length for recirc. line

To conserve energy and minimize heat loss, insulation for hot water lines is recommended.

Maximum allowable equivalent pipe Length*		
Pipe Diameter (Copper pipe)	¾”	½”
Pipe length	400 ft.	100 ft.

*Equivalent pipe length includes hot water line, return lines and all fittings.

Recirculation Pump Control

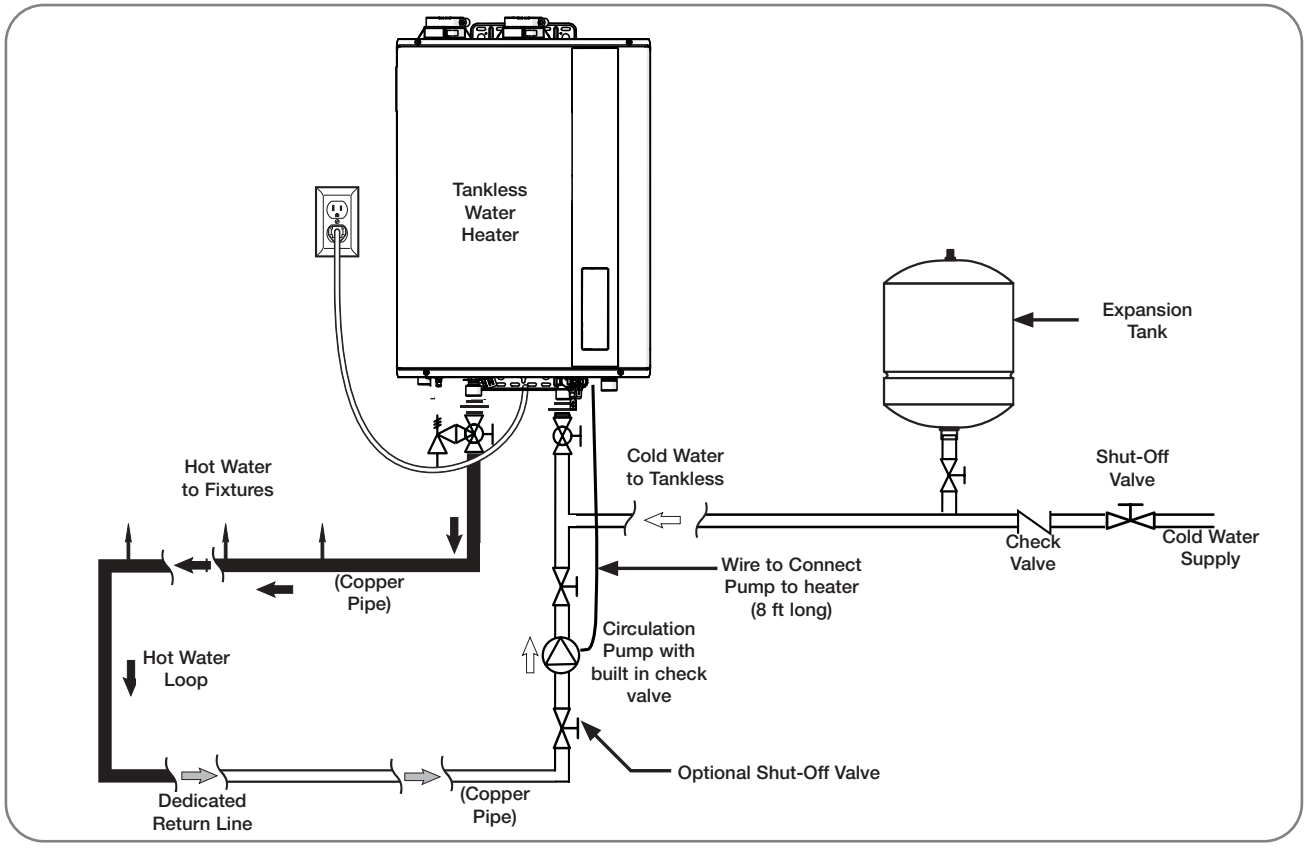

Recirculation Pump Control

Typical Recirculation Pump Installation with Comfort Valve Kit

Comfort Valve Kit can be used for applications that DO NOT have a dedicated return line. Comfort Valve should be installed at the farthest fixture.

Refer to page 57 for maximum allowable equivalent pipe length.

⚠ CAUTION:

Warm water may be present in cold water fixtures and cold water line during pump operation and a short period thereafter, when using cold water line as a return line.

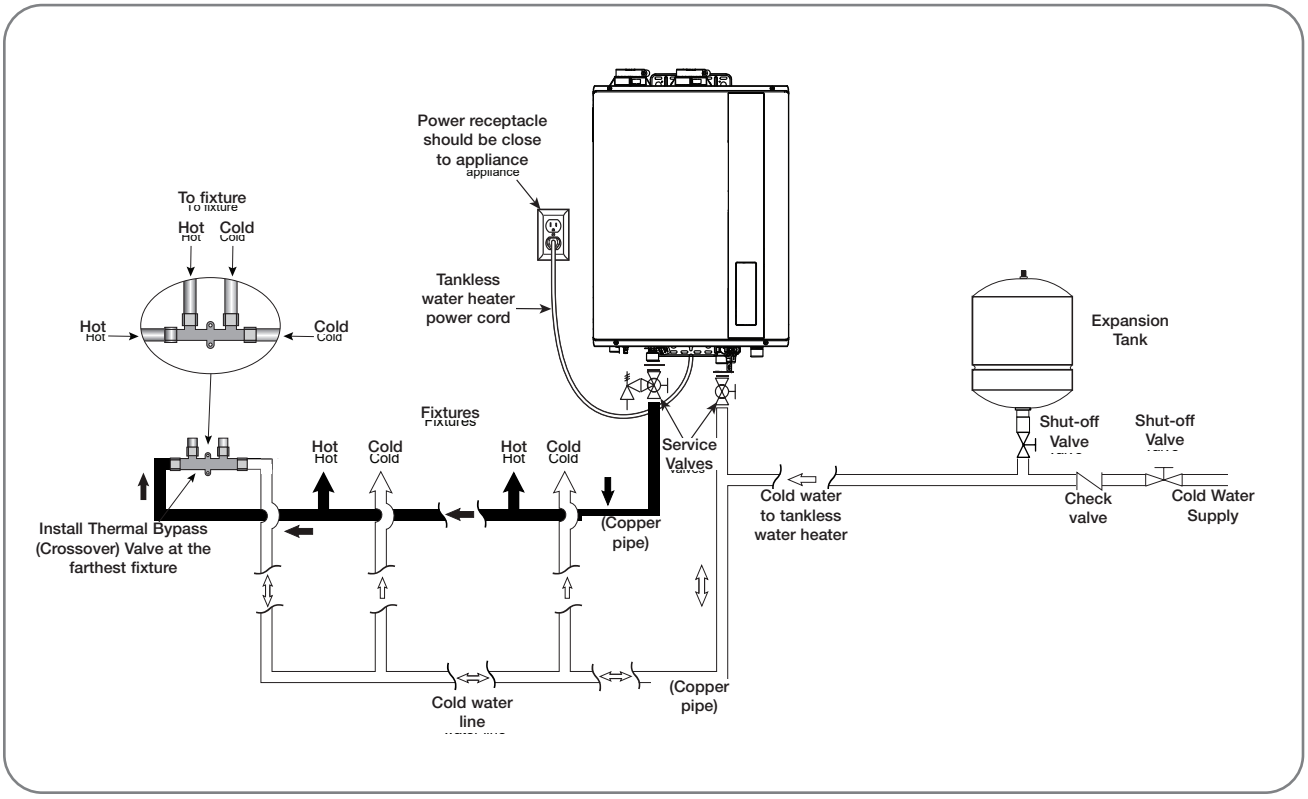

Recirculation Pump Control

Installation

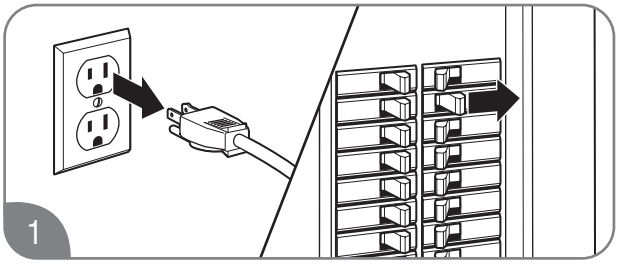

Disconnect all electric power to the water heater.

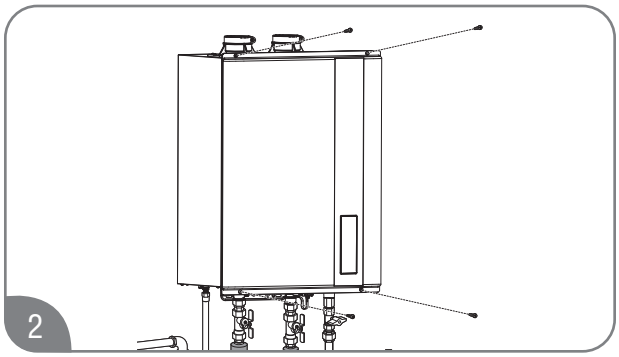

Remove the front cover panel on the water heater.

Install the recirculation pump on the return line according to the pump manufacturer installation instructions. Install a check valve in the return line as shown in typical recirculation pump installation if one is not integrated into the pump. **See "Typical Recirculation Pump Installation".**

NOTICE: Some pumps may have built in check valve.

3

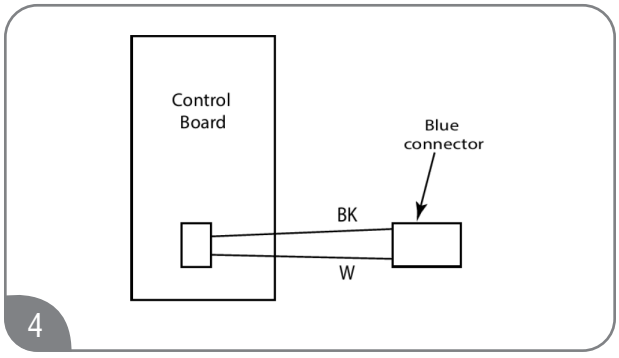

The wire harness for the recirculation pump is bundled with the wire harness from the control board. Find a blue connector with a black and a white wire.

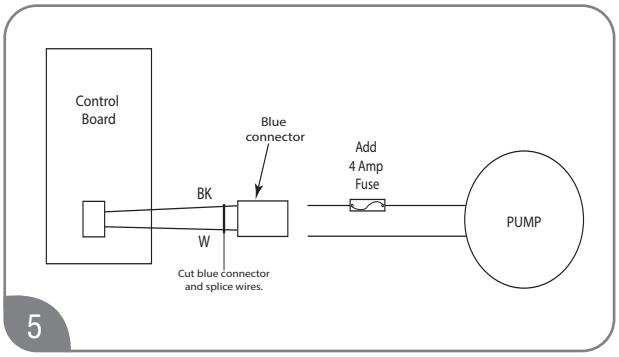

To connect to the pump, cut the blue connector, splice the wires, and add a 4 amp fuse to the hot wire of the pump. Rheem recirculation pump kit includes a molex connector and a 4 amp fuse so splicing wires is not required.

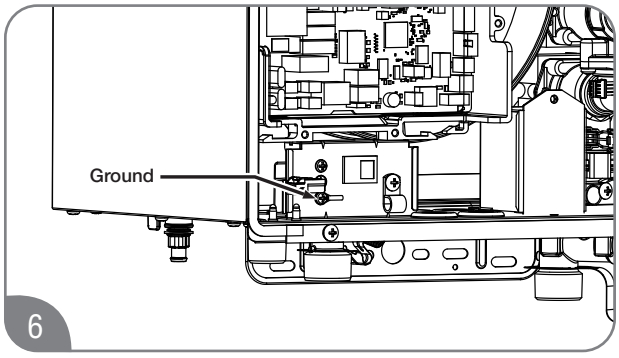

Connect the ground wire from the pump to a screw at the base of the water heater cabinet.

NOTICE:

Follow any applicable electrical code and the pump manufacture installation instruction referring to the Pump Electrical Connection Diagram in Step 5 of these instructions.

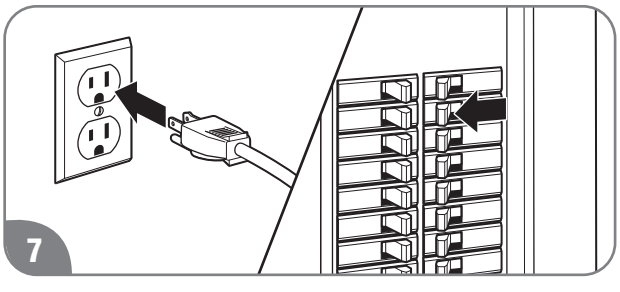

Plug in the power cord or reconnect the power supply at the circuit breaker box.

Recirculation Pump Control

Recirculation Operation

Timer mode

The water heater is turned ON when the recirculation pump starts operation. The water heater produces hot water at the setting temperature. When the return water temperature reaches approximately 15°F (8°F) below the setting temperature, the water heater and the pump will turn OFF. The cycle will restart at the approximate time based on the temperature thermistor reading.

Energy Saver mode

The Energy Saver mode operates as below:

- Less Energy consumption due to fewer pump cycles
- Pump cycles ON Every 30 to 60 minutes

Performance mode

The Performance mode operates as below:

- Higher energy consumption due to more pump cycles
- Pump cycles ON every 15 to 30 minutes

Mode Setting -Timer Mode-

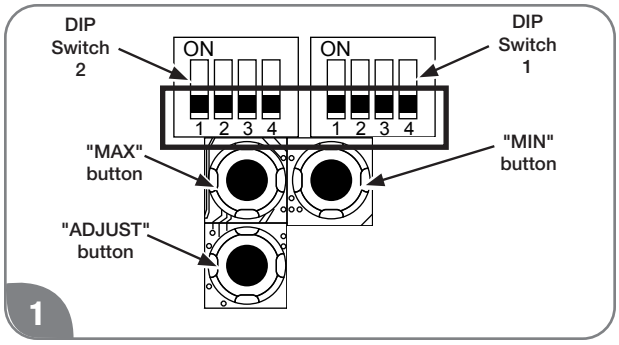

The factory setting for the switch should all be in the OFF position (Down).

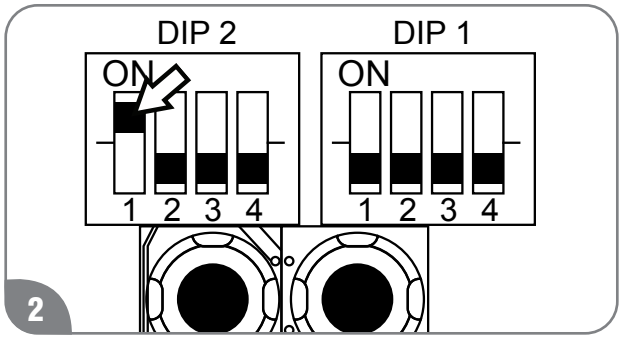

Change the first switch on “DIP switch 2” to the ON position (UP). Performance mode is selected.

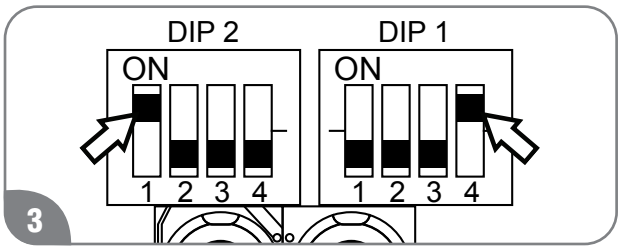

To select Energy Saver mode, change the fourth switch on “DIP switch 1” to the ON position (UP).

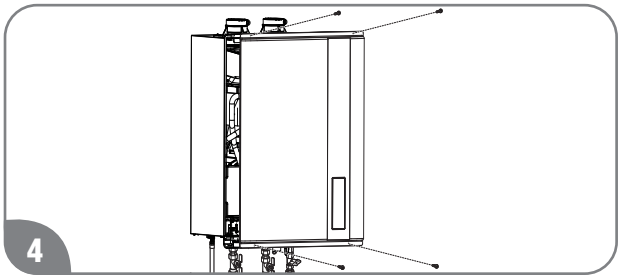

Replace the front cover panel.

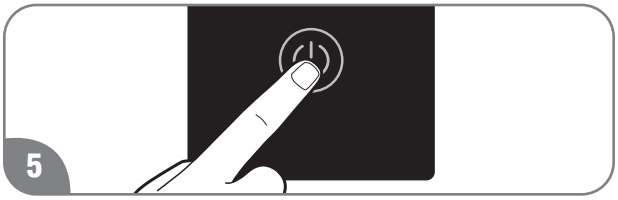

Turn on all electric power to the water heater.

Setting Temp	Typical Pump ON Intervals [Min]	
[°F]	Performance	Energy Saver
140	15	30
135	15	30
130	15	30
125	15	30
120	16	31
118	17	33
116	18	35
114	19	38
112	20	40
110	22	44
108	24	47
106	26	51
104	28	56
102	31	62
100	35	69

Actual pump ON intervals may vary based on the setting temperature, insulation, and heat loss in the system.

Recirculation Pump Control

Recirculation Operation – On-Demand mode-

If the On-Demand mode is used, the water heater needs wifi capability.

If the water heater is NOT a WiFi model, you cannot use the On-Demand mode.

To enter On Demand Mode

- Ensure Switch 1 on DIP 2 and switch 4 on DIP 1 are off.
- In less than one minute.
  - Turn Switch 1 on DIP 2 on-off-on-off.
  - Press the Adjust Button
  - The PCB LED will flash one time

The unit is now in on demand mode.

NOTE:

If the water heater does not have WiFi capability, the built-in display needs to be replaced with the display including WiFi capability.

Rheem offers the display including wifi capability.

See the Parts and Accessories catalog for more information.

When set to On-Demand mode, the recirculation pump is ON for 5 minutes when the water heater receive the signal form the application on smart phone.

Mode setting – On-Demand mode-

Please refer to EcoNet app for instructions.

Recirculation Operation – Schedule mode-

If the Schedule mode is used, the water heater needs wifi capability.

If the water heater is NOT a WiFi model, you cannot use the Schedule mode.

NOTE:

If the water heater does not have WiFi capability, the built-in display needs to be replaced with the display including WiFi capability.

Rheem offers the display including WiFi capability.

See the Parts and Accessories catalog for more information.

When set to Schedule mode, the recirculation pump is ON according the setting schedule on the application on smart phone

Mode setting – Timer mode-

To use Schedule mode, the water heater should be set to Performance mode or Timer mode.

Water Saving Control

Water saving control is optional and is inactive as default. To activate this control, appropriate procedures must be followed.

Water saving control can reduce waste water at initiation of hot water demand by reducing flow until outlet hot water reaches set temperature.

It is recommended to turn ON this control if the water heater is installed in a drought area or anywhere water conservation is needed.

Follow the steps below to turn ON the water saving control.

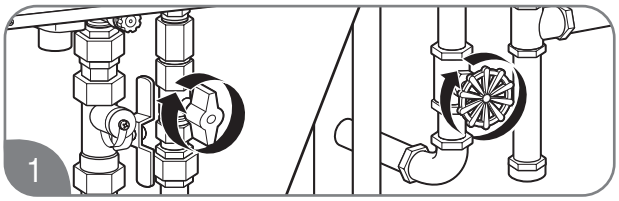

Turn off the gas and water to the water heater by closing the shut-off valves.

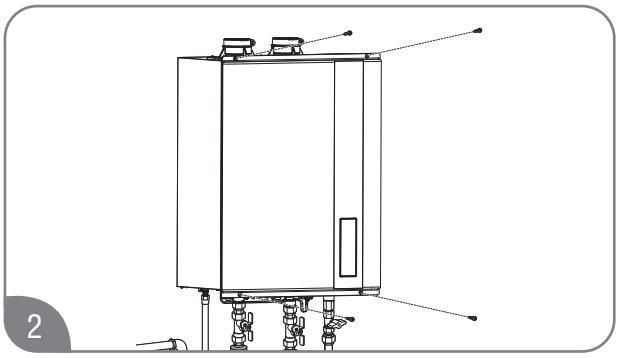

Remove the front cover panel on the water heater and ensure the remote is OFF.

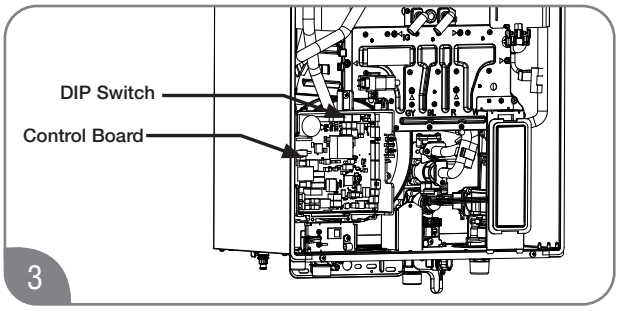

Find DIP Switch 1 located in the top-right portion at the control board. The switch labeled “DIP 1” is the right-most set of switches. If any DIP switches are on for venting/altitude settings, switch them to the OFF position.

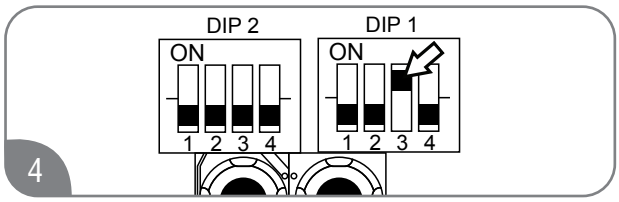

Change the third switch on “DIP 1” to the ON position (UP).

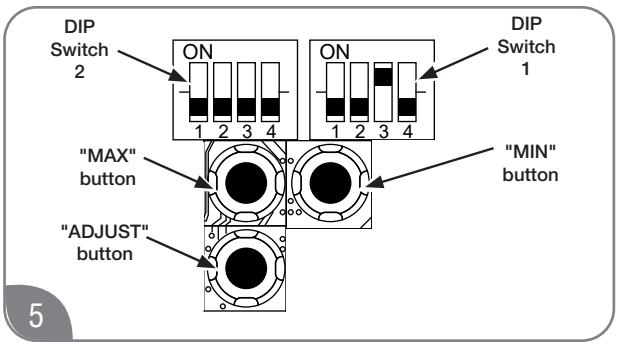

Within 30 seconds of turning the third switch ON, press the "Max button" or "Min button" on the control board to set the activation of this control.

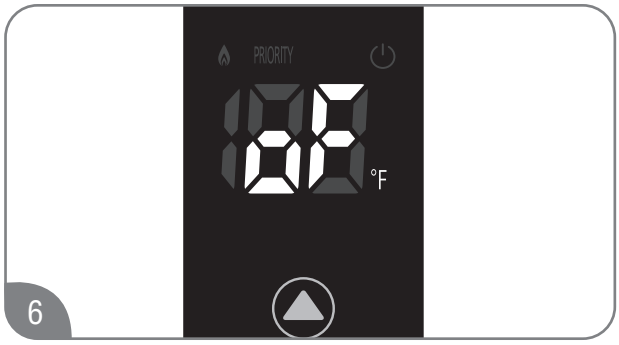

LED display on the built-in control shows “oF”.

Within the next 30 seconds, the display/control board will show the water saving control setting. The LED identifications are below

WATER SAVING CONTROL	CONTROL BOARD LED (RED)	DISPLAY LED
ON	Once Flashing	ON
OFF	Twice Flashing	OF

Water Saving Control

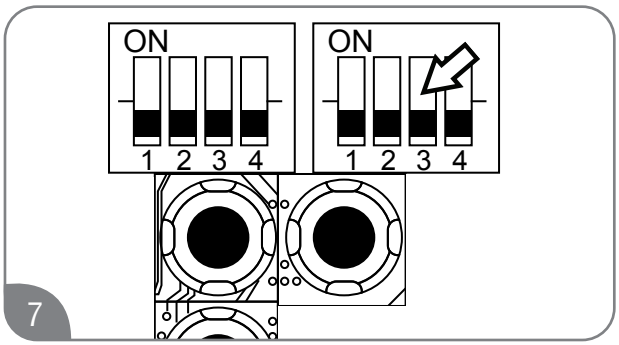

After setting the activation of this control, change the third switch on “DIP 1” to the OFF position (DOWN). Be sure to reapply any venting/altitude DIP switch settings.

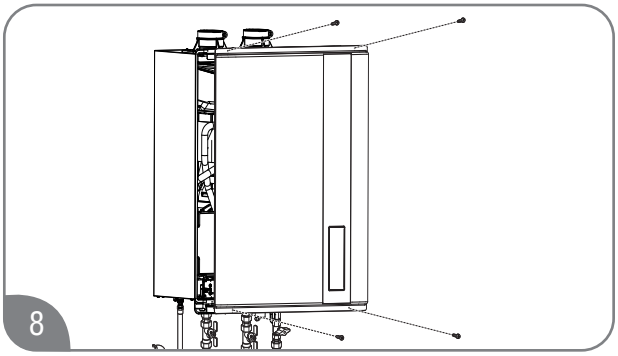

Replace the front cover panel and turn the remote ON. Turn the remote on before turning the water supply on.

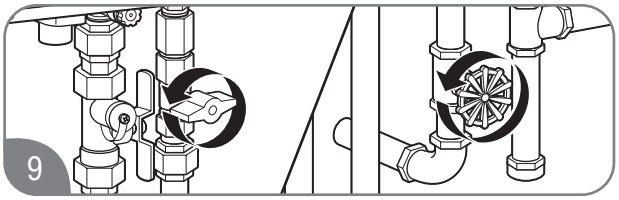

Turn on the gas and water to the water heater by opening the shut-off valves.

Water Heater Inspections

Venting System (Direct Vent Only)

The venting system should be inspected annually to ensure all of the vent sections are secure and airtight. Qualified service personnel are familiar with vent system inspections and may be contacted for advice.

⚠WARNING:

DO NOT operate the water heater if the vent system shows signs of leaking exhaust. Leaking exhaust could lead to death, personal injury, and/or product failure.

⚠DANGER:

Shock Hazard – Make sure the electrical power to the water heater is OFF before removing protective cover. Electric shock will cause death or serious personal injury.

Condensate Collector

⚠CAUTIONS:

- **Condensate is known to be acidic; refer to federal, state (provincial), and local codes for proper handling and discharge methods.**
- **DO NOT** operate without the condensate collector drain connected and routed to an external neutralizer or proper drain that can handle corrosive condensate. This could cause the system to malfunction or fail.

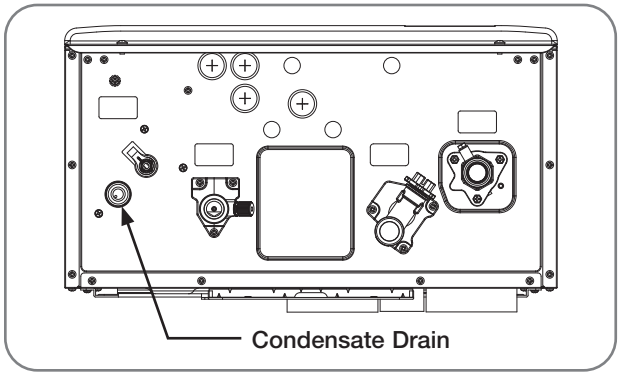

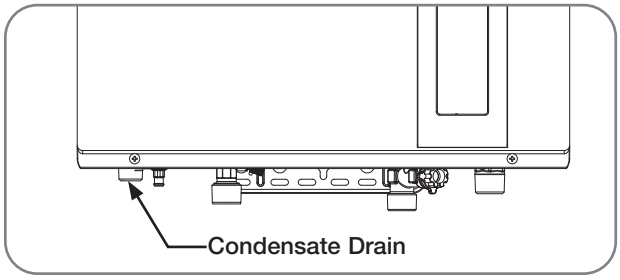

On a regular basis, inspect the condensate drain line to ensure the condensate is draining properly.

CARING FOR YOUR WATER HEATER

Burner

It is recommended the burner be annually inspected by a qualified service technician.

⚠DANGER:

Shock Hazard – Removing the front cover panel exposes you to live electricity. Electric shock will cause death or serious personal injury.

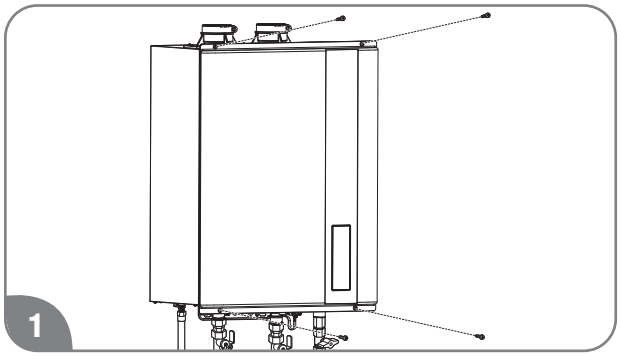

Remove 4 screws and the unit cover panel.

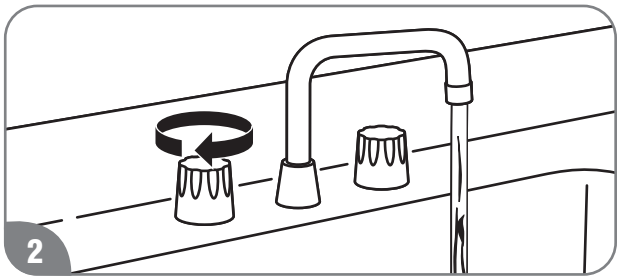

Turn on a hot water faucet.

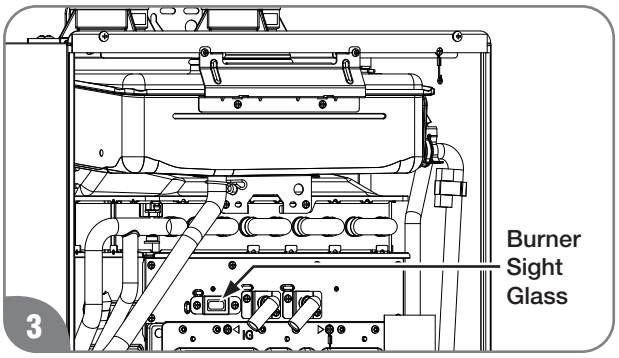

While the water heater is operating, inspect the main burner flames through the burner sight glass. The flames should be blue when the main burner is firing.

NOTICE:

If the flames are not blue or you observe unusual burner operation, shut off the water heater and contact a qualified service technician.

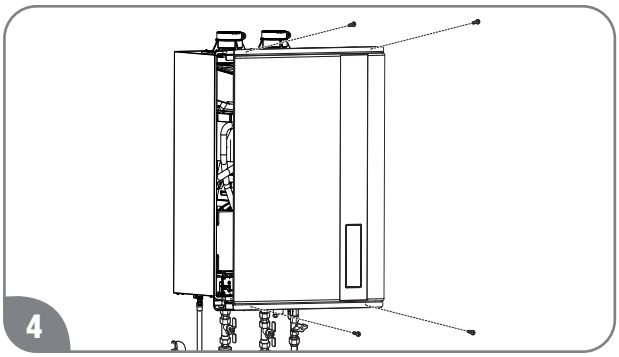

Turn off the hot water faucet and reinstall the unit cover panel.

Care and Cleaning

⚠DANGER:

Shock Hazard – Make certain power to the water heater is OFF before removing protective cover for any reason. Electric shock will cause death or serious personal injury.

⚠WARNING:

Combustible materials, such as clothing, cleaning materials, or flammable liquids, must not be placed against or next to the water heater. Fire or explosion can occur causing death, personal injury, and/or product damage.

All care and cleaning to and around the water heater should only be performed with the water heater turned off and the electrical power supply disconnected.

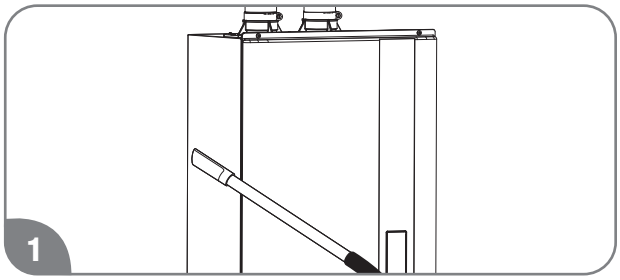

Vacuum around the water heater to remove any dust, dirt, and/or lint buildup.

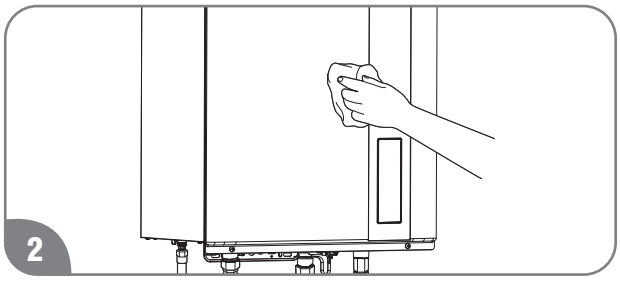

Clean the water heater with a damp soft cloth and mild detergent. Gently wipe and completely dry all surfaces.

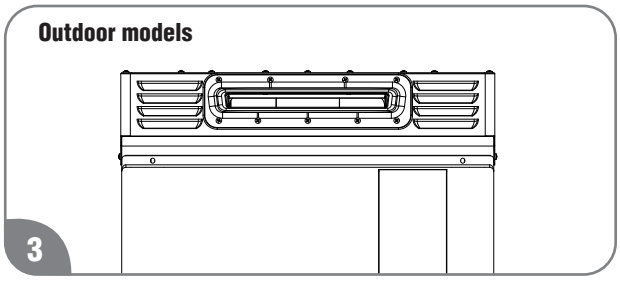

Check the air intake and vent outlet for blockage and/or debris.

NOTICE:

The air intake requires a minimum of 12 in. (30 cm) of clearance between the air intake opening and any obstruction.

Clean the water filter monthly, as described below and on the next page.

Water Filter Cleaning

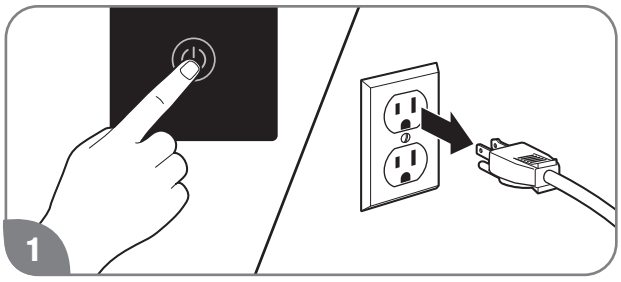

Turn off the water heater and disconnect the electrical power supply.

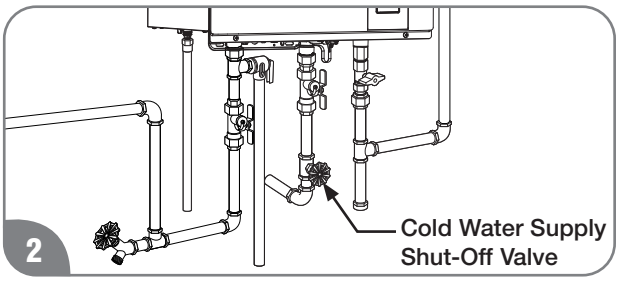

Turn off the water supply to the water heater.

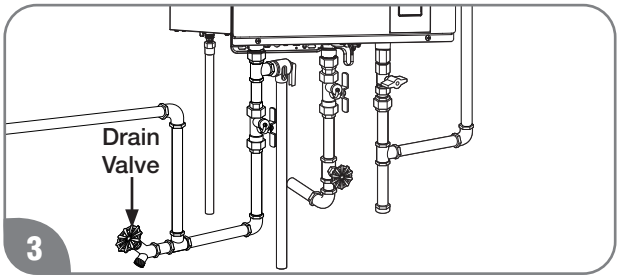

Drain the water heater. See "Draining the Water Heater" section.

CARING FOR YOUR WATER HEATER

⚠CAUTION:

DO NOT tap or force the filter during removal. This can deform and/or damage the filter.

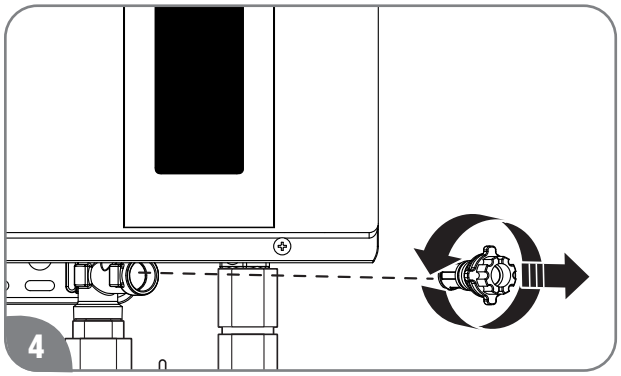

Unscrew the water filter from the base of the cold water inlet line and carefully slide it out of the line.

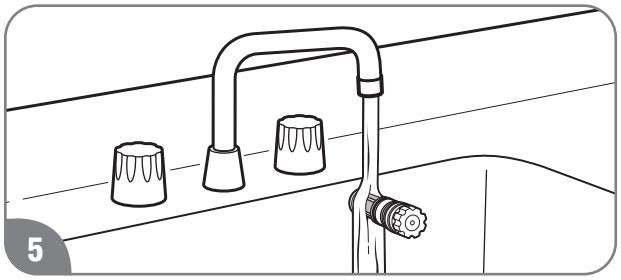

Clean the water filter under running water. To remove severe sediment and dirt, use a soft brush.

⚠CAUTION:

DO NOT overtighten the water filter. Overtighten can deform and/or damage the filter.

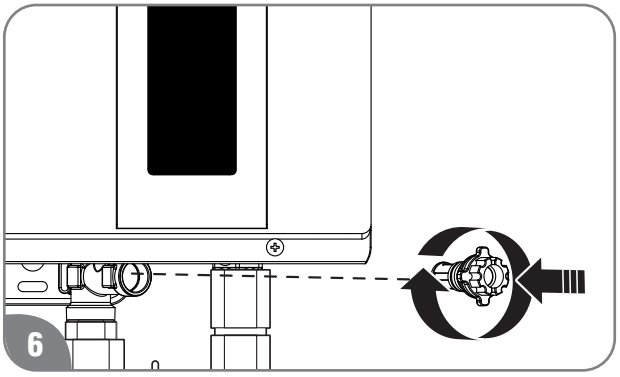

Replace the filter in the cold water inlet line and tighten until it is snug.

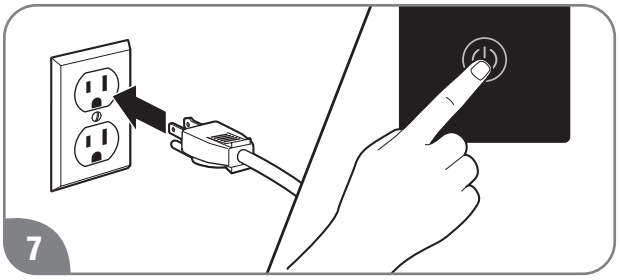

Turn on the water supply, reconnect the electrical supply, and turn on the water heater.

Preventive Maintenance

⚠WARNING:

Failure to perform routine preventive maintenance can prevent the water heater from operating properly. Improper operation can cause carbon monoxide dangers, excessive water temperatures, and other potentially hazardous conditions resulting in death, personal injury, and/or product damage.

Properly maintaining your water heater will ensure dependable, trouble-free service.

User Preventive Maintenance

Establish and follow a routine preventive maintenance program. The following suggested items should be included in your program.

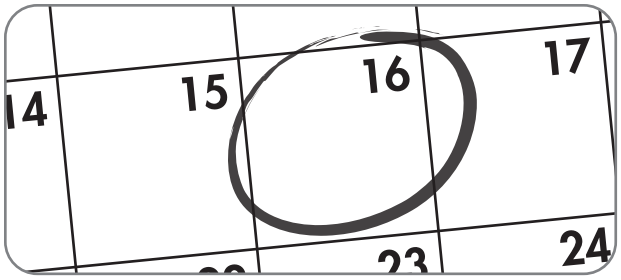

Check and clean the water filter monthly. See *"Water Filter Cleaning"* on this Use and Care Manual.

⚠WARNING:

Hot water is released during manual operation of the relief valve. Make sure all people and animals are clear from the area before performing this check to prevent death, personal injury, and/or property damage from hot drain water.

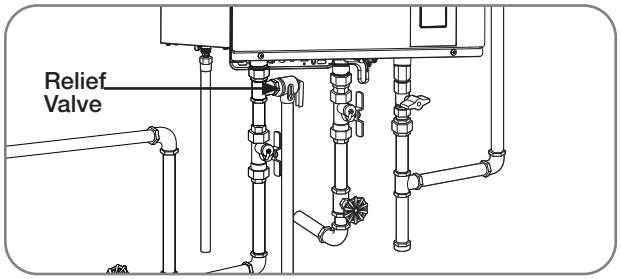

- **Annually check the operation of the pressure relief valve annually. Lifting the lever handle on the pressure-relief valve opens the valve to flush hot water through the discharge line to the drain. After several gallons have drained, release the lever handle to close the valve and stop draining.**

NOTICE:

If the pressure relief valve on the hot water heater discharges periodically, this may indicate a problem in the water system. Contact the water supplier or a plumbing contractor to correct the problem. DO NOT plug the relief valve outlet.

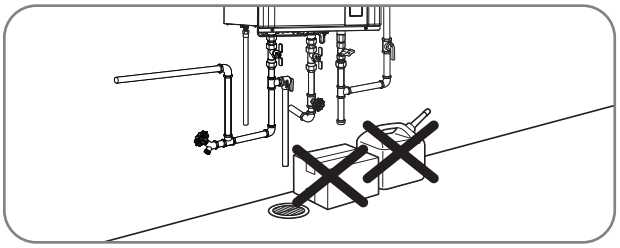

- **Inspect and keep the area around the water heater clear and free of flammable materials, such as gasoline and other flammable vapors and liquids.**
- **Visually inspect the water heater for damage and/or denting. If present, contact qualified service personnel to verify proper operation.**
- **Check for abnormal sound during normal operation (e.g., hissing or banging noises). Contact qualified service technician or plumbing contractor if abnormal sounds are noted.**
- **Check all gas and water pipes for leaks. See "Leak Testing " on this Use and Care Manual.**
- **Visually inspect vent screens. Remove any debris or blockages.**
- **If condensate neutralizer is installed; annually inspect and ensure the neutralizer medium is present. If the medium is depleted, replace the neutralizer.**
- **Check for blockage of condensate line.**

NOTICE:

– DO NOT operate the water heater if you feel something is wrong with the unit.
– DO NOT allow children to operate or handle the unit.

- **After inspections, maintenance, and/or cleaning, ensure proper operation by turning on a hot water faucet.**

Professional Preventive Maintenance

It is recommended that a periodic inspection of the water heater burner, relief valve, air intake filter, water filter, and venting system be made by a qualified service technician.

⚠WARNING:

Certain water conditions can damage the water heater and may cause defects, malfunctions or failures of the water heater that are not covered by the limited warranty. See "Water Quality" on this Use and Care Manual.

CARING FOR YOUR WATER HEATER

Draining the Water Heater

⚠WARNING:
Failure to follow these draining instructions can cause serious personal injury from scalding and/or product damage.

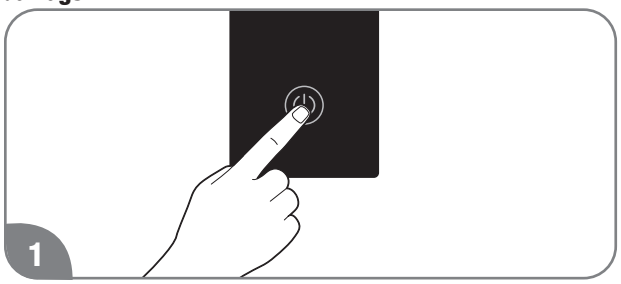

Turn off the water heater by pressing the POWER ON/OFF button on the LED display.

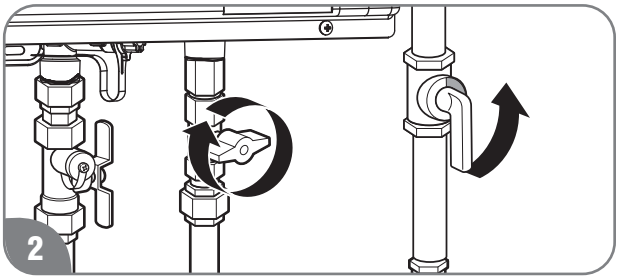

Close the gas shut-off valve(s).

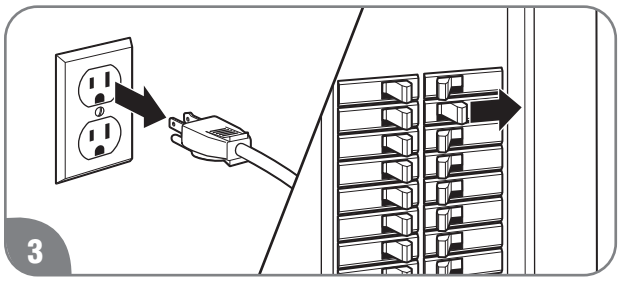

At least 10 seconds after Step 1, unplug the water heater or disconnect the power supply at the circuit breaker box.

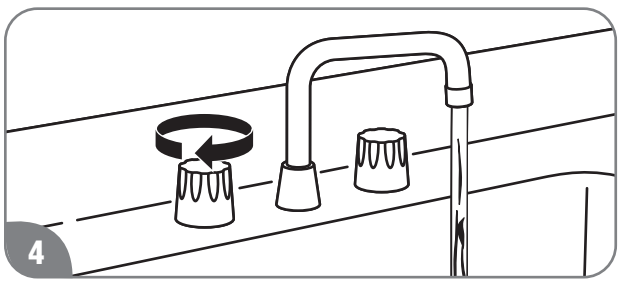

Open all hot water faucets. Run the water until it is COLD; then shut off the faucet.

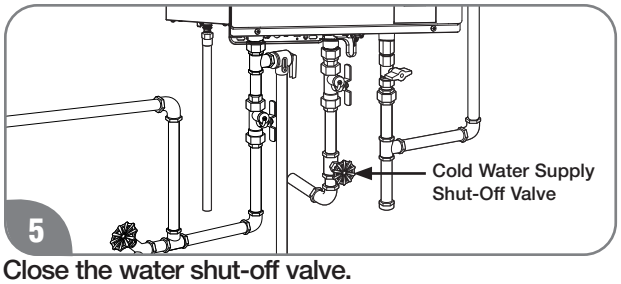

Close the water shut-off valve.

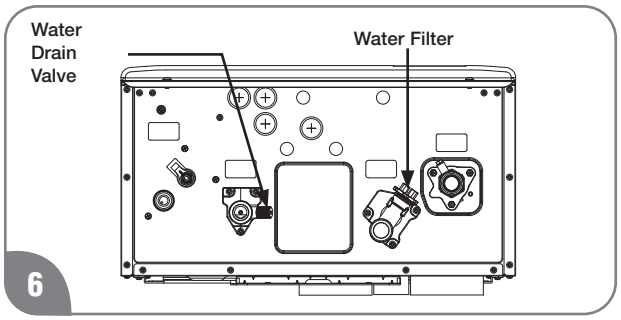

Find the water drain valve and the water filter located at bottom of the water heater.

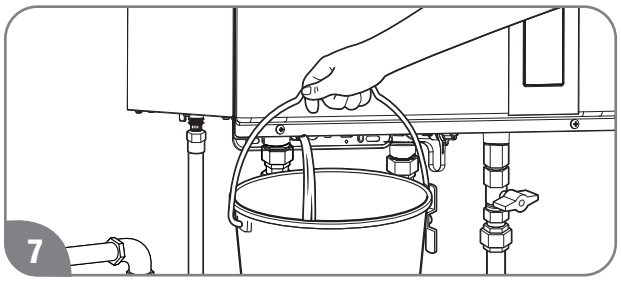

Using a suitable container to catch the water, remove the water drain valve from the base of the hot water outlet line, and the water filter from the base of the cold water inlet line.

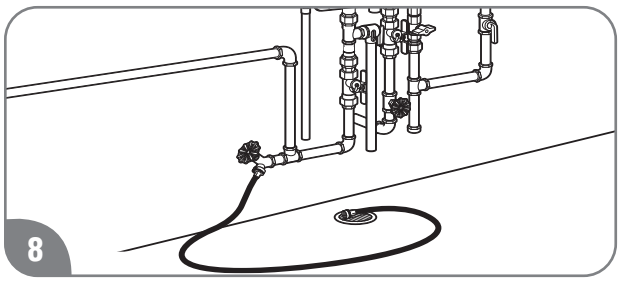

Connect a garden hose to the drain valve in the hot water outlet line and place the other end in a suitable drain. Open the drain valve until all the water has drained from the water heater. Leave water heater as is until placed back in service.

Draining the Water Heater

⚠CAUTION:

Even when drained properly, a small amount of water will remain in the water heater. In cold weather conditions, this water can freeze. If this happens, allow the defrost protection on the water heater at least 60 minutes to melt the frozen water. The water heater will not work properly until this water is thawed.

To put the water heater back in service:

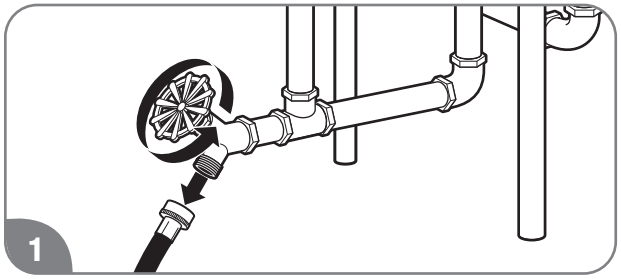

Disconnect drain hose. Make sure the drain valve is closed.

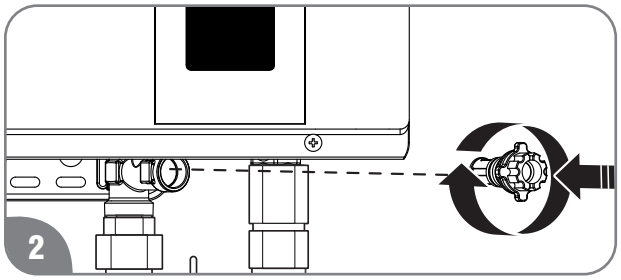

Reinstall the water filter in the base of the cold water inlet line, the water drain valve, and the water drain plug.

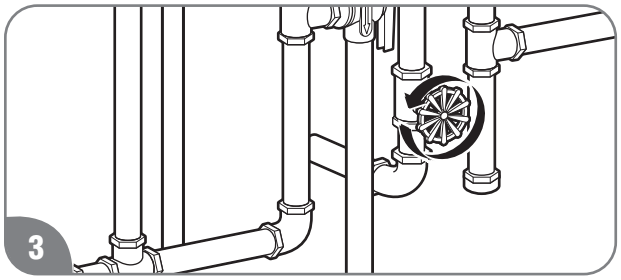

Open the water shut-off valve.

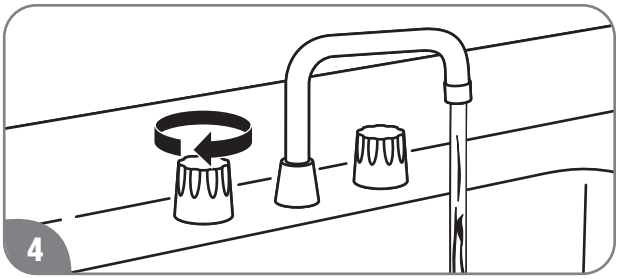

Open all hot water faucets and let run until all air has been purged from the lines. Close all hot water faucets.

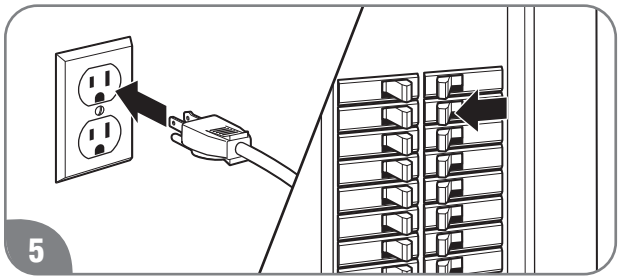

Plug in the power cord or reconnect the power supply at the circuit breaker box.

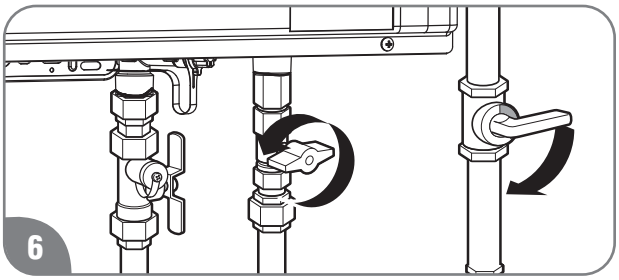

Open the gas shut-off valve(s).

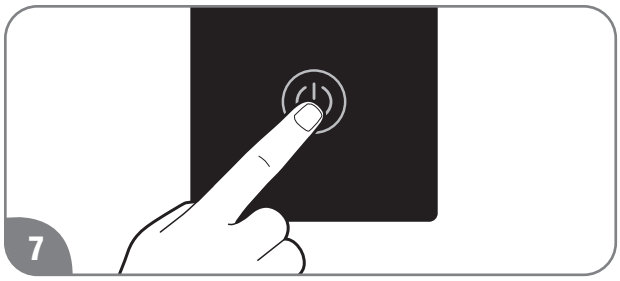

Press the POWER ON/OFF button on the remote control to restart the unit.

CARING FOR YOUR WATER HEATER

Standard Drain Method

Service isolator valve kits may be purchased from the manufacturer, distributor, or place of purchase. The kits include two full-port isolation valves to be used in the inlet and outlet water lines. These kits provide a means for full diagnostic testing and ease of system flushing and draining.

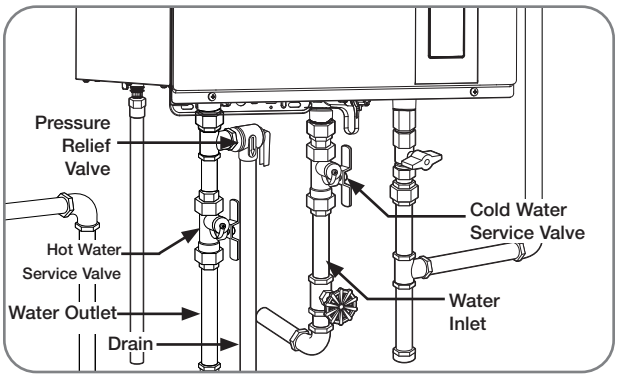

Freeze Protection

⚠WARNING:

Failure to drain the water heater can cause serious personal injury from scalding and/or product damage.

Whenever the water heater may be exposed to freezing conditions, precautions should be taken to help prevent the water heater from freezing.

Freezing conditions come from the ventilation system on direct-vent models and from exposure to cold air on outdoor models.

All of these water heaters are equipped with a freeze protection electric heater. This heater helps prevent freezing inside the water heater down to an outside temperature of -30°F (-35°C) on indoor installations and approximately -4°F (-20°F) on outdoor installations. These temperatures are all based on temperatures without wind.

The heater only protects the internal components of the water heater.

NOTICE:

Unplugging or disconnecting the power supply to the water heater will also disconnect the power to the freeze protection electric heater.

External piping and valves require additional freeze protection. One method is to wrap insulation around the piping and valves.

Another method is to turn on a hot water faucet and leave a small amount of water running at a faucet. This will help protect the water heater, piping, and valves from freezing.

If power outages occur during freezing conditions, it is recommended to completely drain the water heater to help prevent damage to the unit. See "Draining the Water Heater." Once power is restored, refill the water heater and check for frozen or leaking components.

Components or heat exchangers damaged by freezing conditions is not covered under manufacturer's warranty.

Running Water Freeze Protection

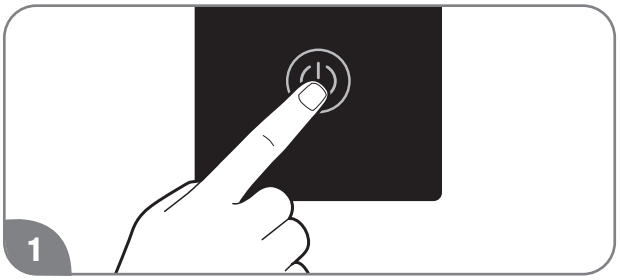

Turn off the water heater by pressing the POWER ON/OFF button on the remote control.

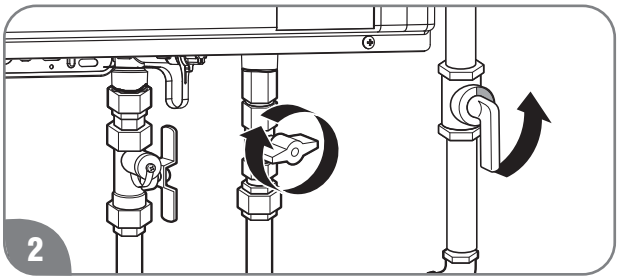

Close the gas shut-off valve(s).

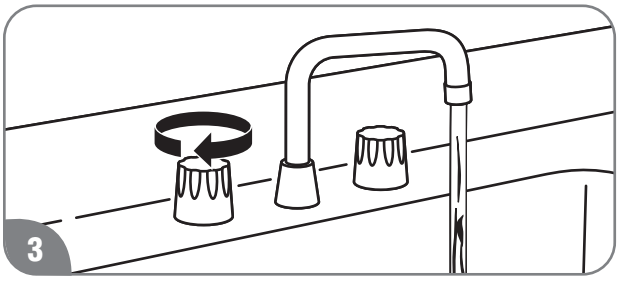

Open a hot water faucet slightly until the water stream is approximately 1/8 in. (0.3 cm). Be sure to check the flow periodically.

Vacation and Extended Shutdown

⚠WARNING:

Failure to drain the water heater can cause serious personal injury from scalding and/or product damage.

If the water heater is to remain idle for an extended period of time, the power and water to the heater should be turned off.

The water heater and piping should be drained if they might be subjected to freezing temperatures. When drained, some water may remain in the unit. See ***"Freeze Protection"*** section on this Use and Care Manual.

After an extended shutdown, the water heater's operation and controls should be checked by a qualified service technician.

Troubleshooting Chart

The information in the following troubleshooting chart may help you diagnose and/or fix a problem you may be experiencing. Please review this chart before calling for service assistance.

⚠DANGER:

Shock Hazard – Make certain power to the water heater is OFF before removing protective cover for any reason. Electric shock will cause death or serious personal injury.

⚠WARNING:

For Your Safety, DO NOT attempt repair of electrical wiring, gas piping, remote control, burners, vent connectors, or other safety devices. Refer repairs to a qualified service technician.

Problem	Possible Cause	Solution
Not enough or no hot water. 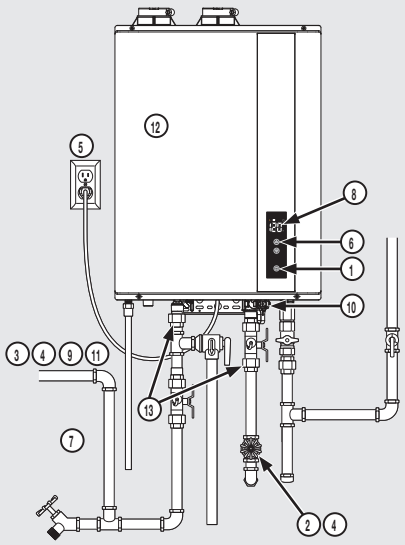	**1.** Unit is not ON.	**1.** Turn on the unit by pressing the POWER ON/OFF button.
	2. Water shut-off valve is not completely opened.	**2.** Check shut-off valve and open completely.
	3. Hot water faucet is not completely opened.	**3.** Open hot water faucet completely. (The main burner goes off when incoming water volume is inadequate.)
	4. Water piping is frozen.	**4.** Allow piping to thaw.
	5. Electrical power is disconnected or water supply is shut off.	**5a.** Plug in the power cord or reconnect the power supply at the circuit breaker box. **5b.** Completely open the water supply valve. (Inadequate water volume will cause the main burner to turn off.)
	6. The temperature may be set too low.	**6.** Increase the temperature setting.
	7. Mixing valve malfunctions (if applicable).	**7.** Check and replace the mixing valve.
	8. Error code displayed on the remote control.	**8.** See *"Service Error Code Chart"* on page 76. If required, contact a qualified service technician.
	9. Not enough water demand.	**9.** Increase the hot water flow at the faucet.
	10. Water filter is clogged or dirty.	**10.** Clean the water filter. (See page 76.)
	11. Fixture aerator is clogged or dirty.	**11.** Clean the aerator.
	12. Scale buildup in the heat exchanger.	**12.** Check for error code. If required, contact a qualified service technician.
	13. Hot and cold water lines reversed.	**13.** Reverse the water lines.

CARING FOR YOUR WATER HEATER

Troubleshooting Chart

Problem	Possible Cause	Solution
Water not hot enough. 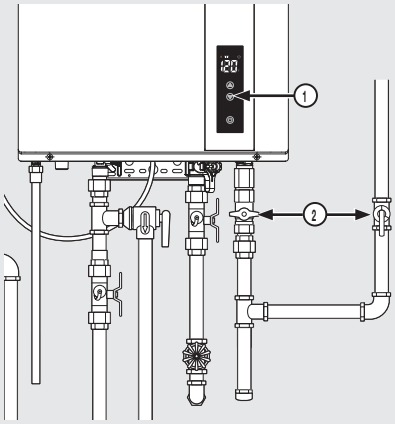	1. The temperature may be set too low.	1. Increase the temperature setting at the remote control.
	2. The gas valve is not completely opened.	2. Check and completely open the gas valve.
	3. Gas supply pressure is low.	3. Contact your gas utility company or gas contractor to verify the gas meter and gas piping size.
	4. Bleed-over in one of the hot water fixtures.	4. Contact a dealer or a qualified service technician.
Water too hot. 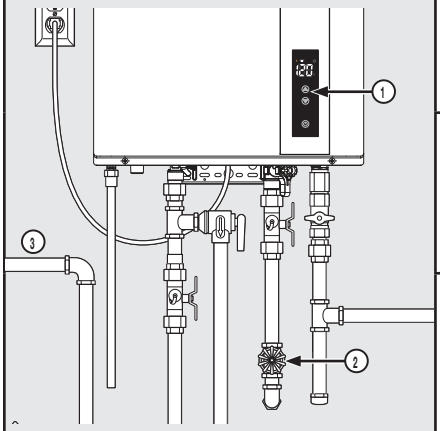	1. Temperature is set too high.	1. Decrease the temperature setting at the remote control.
	2. Water shut-off valve is not completely opened.	2. Check and completely open the water shut-off valve.
	3. Small amount of water has been heated.	3. Increase the hot water flow at the faucet to allow more water to flow through the water heater.
Fan continues to rotate after the hot water faucet is closed.	The post-purge cycle clears flue gases.	Normal operation.

Service Error Code Chart

Your water heater has an electronic diagnostic system built into it. When the water heater finds a problem, it displays an error code in the LED display on the remote control. The chart on the next page lists the error codes along with their possible problem and solution. Using this chart may help you diagnose and/or fix a problem you may be experiencing. Please refer to this chart before calling for service assistance.

⚠DANGER:

Shock Hazard – Make certain power to the water heater is OFF before removing protective cover for any reason. Electric shock will cause death or serious personal injury.

⚠WARNING:

For Your Safety, DO NOT attempt repair of electrical wiring, gas piping, remote control, burners, vent connectors, or other safety devices. Refer repairs to a qualified service technician.

When an error code is displayed:

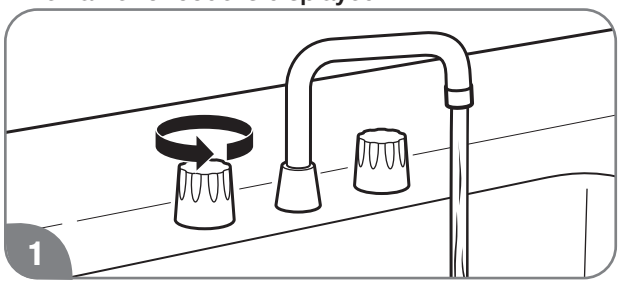

Turn off all the hot water faucets.

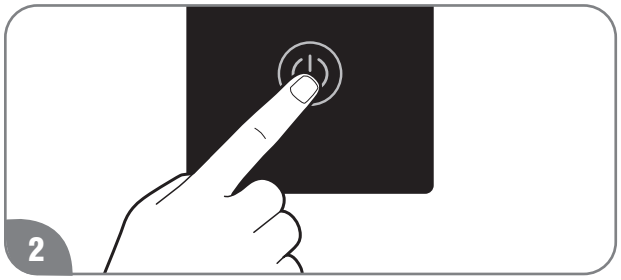

Turn off the water heater by pressing the POWER ON/OFF button on the remote control.

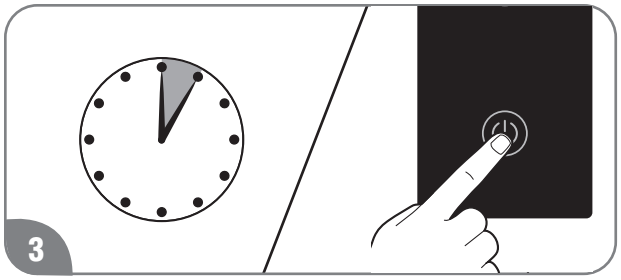

Wait about 5 minutes; then restart the water heater by pressing the POWER ON/OFF button.

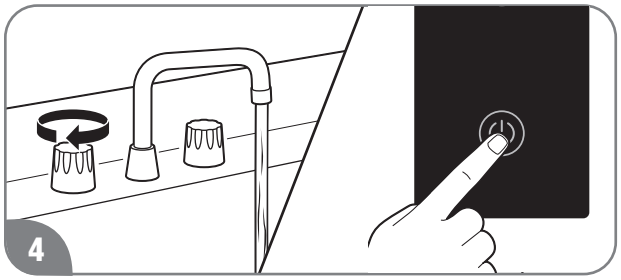

Turn on a hot water faucet and recheck the remote control display.

If the error code remains in the display:

1. Turn off the hot water faucet.
2. Turn off the water heater.
3. Unplug the water heater from power, wait about 30 seconds and plug back in.
4. Follow the error code chart information.
5. Restart the water heater, turn on a hot water faucet, and recheck the remote control display.

If the error code is still shown:

1. Turn off the hot water faucet.
2. Turn off the water heater.
3. Make note of the displayed error code and call for service assistance. See ***"Call for Assistance"*** section on this Use and Care Manual.

NOTICE:

If the displayed error code is not listed in the chart, immediately turn off the water heater and call for service assistance.

CARING FOR YOUR WATER HEATER

Error Code	Possible Cause	Solution
1L	Water heater has buildup of lime deposits.	Contact a dealer or qualified service technician.
11	The gas shut-off valve is not fully opened.	Check shut-off valve and open completely.
12	Gas service has been interrupted.	Contact your gas utility company.
	LP gas is running low (LP models only).	Refill or replace your LP gas container.
14	Water heater is overheating.	Contact a dealer or qualified service technician.
29	Neutralizer is clogged.	Contact a dealer or qualified service technician.
31	Faulty inlet thermistor.	Contact a dealer or qualified service technician.
33	Faulty outlet thermistor.	Contact a dealer or qualified service technician.
61	Faulty blower motor.	Contact a dealer or qualified service technician.
66	Faulty bypass motor.	Contact a dealer or qualified service technician.
71	Solenoid valve circuit failure.	Contact a dealer or qualified service technician. Flushing procedure may need to be repeated for excessive lime and scale build-up.
88	Reminder of flushing the heat exchanger and/or replacing the water treatment filter.	Contact a dealer or qualified service technician.
90 or 99	Air intake or vent exhaust opening may be blocked.	Remove any blockage. (Air intake requires 12 in. [30 cm] of clearance.)
	The vent pipes on the vent termination may not be connected properly.	Contact a dealer or qualified service technician.
P1	Not enough water flow to operate the unit.	Increase the water flow from the fixtures.

IF YOU NEED SERVICE



Call for Assistance

1. All questions, adjustments, repairs, and/or routine maintenance should be directed to your installer, plumbing contractor, or licensed service agent. If your contacts have moved or are not available, please refer to the telephone directory, commercial listings, or local utility company for qualified service assistance.
2. If your problem has not been solved to your satisfaction, contact the Manufacturer National Service Department at the following address:

   Manufacturer National Service Department
   800 Interstate Park Drive
   Montgomery, AL 36109
   Phone: 1-866-720-2076

When contacting the manufacturer, the following information will be requested:

A. Model and serial number. (See page 8 or the ratings plate on the side of the water heater.)
B. Address where the water heater is located.
C. Name and address of installation contractors (page 8) and all qualified service companies that have worked on the water heater.
D. Original installation date. (See page 8.)
E. Dates any service or preventive maintenance was performed.
F. Details of the persisting problem.
G. List of businesses that have tried to fix this problem, along with dates of service.

Maintenance Notice

Maintenance notice is an optional control and is inactive as default. Maintenance notice reminds users of water heater maintenance activities such as flushing the heat exchanger or replacing the water treatment filter (if applicable) in order to maximize the life of your tankless water heater. Contact technical service department listed on page 76 of this use and care manual if you are not familiar with these maintenance activities.

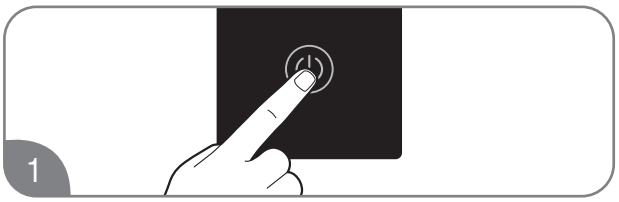

Turn off the remote control.

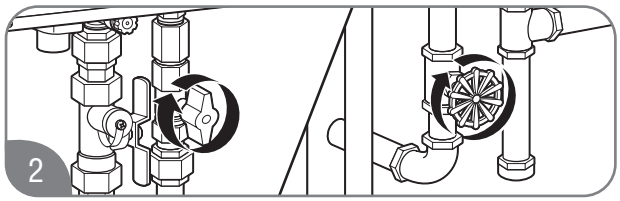

Turn off the gas and water to the water heater by closing the shut-off valves.

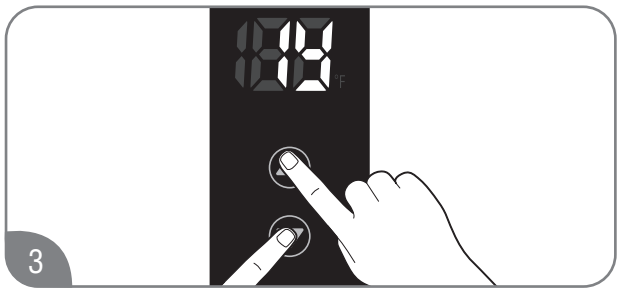

Press and hold the "▲"and "▼"button until "1Y " is displayed on the built-in display.

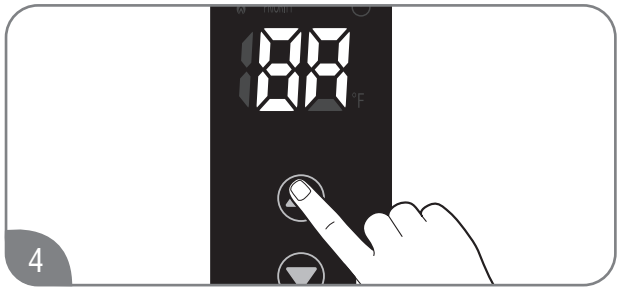

Press the "▲"or "▼"button until "8A " is displayed. Press and hold the power button on the build-in display for 1 second.

The current setting time is displayed on the display.

(Factory setting is "OFF")

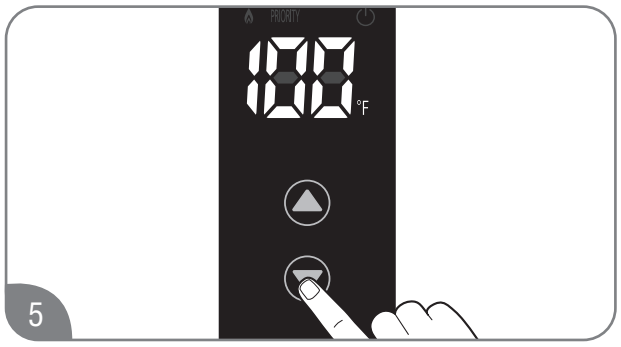

Press the "▲"or "▼"button to choose "50", "75", "100" or "OF".

Displayed	Maintenance Notice Hour
50	500 hours
75	750 hours
100	1,000 hours
OF	OFF

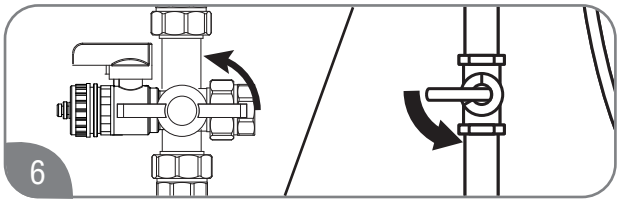

Turn on the gas and water to the water heater by opening the shut off valves.

When tankless water heater has a certain number of hours of combustion, error code "88" is shown on the display. It is highly recommended to perform water heater maintenance activities such as flushing the heat exchanger and/or replacing the water treatment filter (if applicable).

CARING FOR YOUR WATER HEATER

Maintenance Notice

ERROR CODE 88 CLEARING

IMPORTANT

It is highly recommended to perform water heater maintenance activities such as flushing the heat exchanger and/or replacing the water treatment filter (if applicable) before clearing this error code.

After these maintenance activities are completed, follow the steps below to clear error code "88".

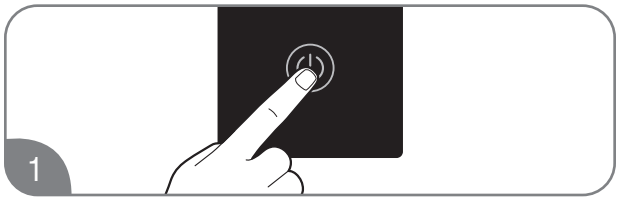

Turn on the remote control.

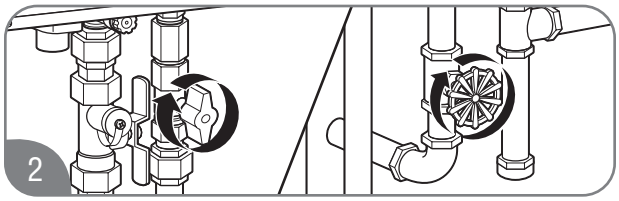

Turn off the gas and water to the water heater by closing the shut-off valves.

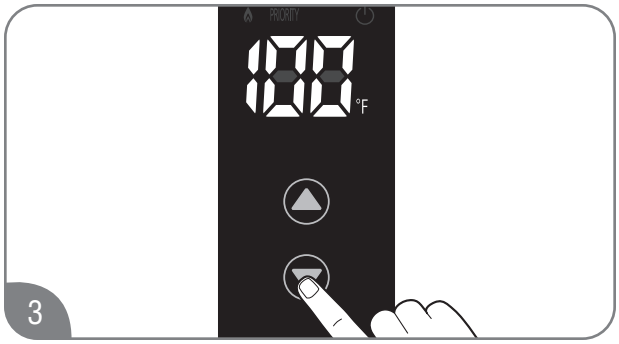

Press the DOWN adjustment button repeatedly until the lowest setting temperature shows in the LED display.

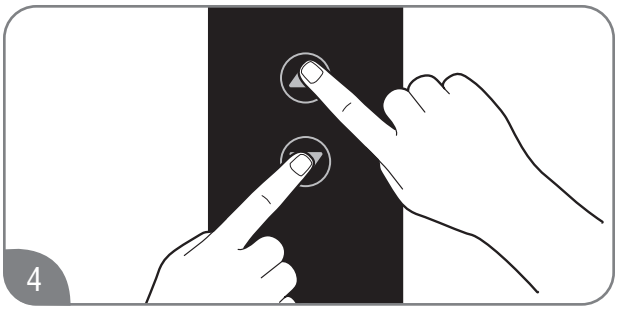

Press and hold the DOWN and UP adjustment button for 5 to 10 seconds.

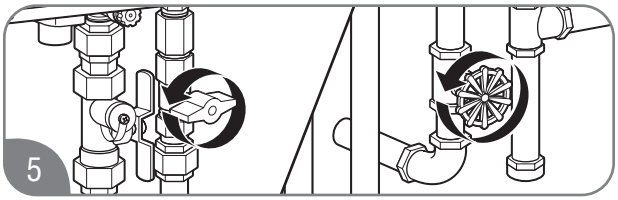

Turn on the gas and water to the water heater by opening the shut off valves.

If error code "88" is still shown, repeat steps 1 through 5 above.

Parts Ordering

⚠WARNING:

For your safety, DO NOT attempt to disassemble, repair, or replace any portion of this unit. Refer all repairs, service, and/or adjustments to qualified service personnel.

Address all parts orders to the distributor or store where the water heater was purchased. All parts orders should include:

1. The model and serial number of the water heater from the rating plate.
2. Specify the gas type (natural or LP) as marked on the rating plate.
3. Parts description (as shown below) and number of parts desired.

Direct-Vent Gas Components

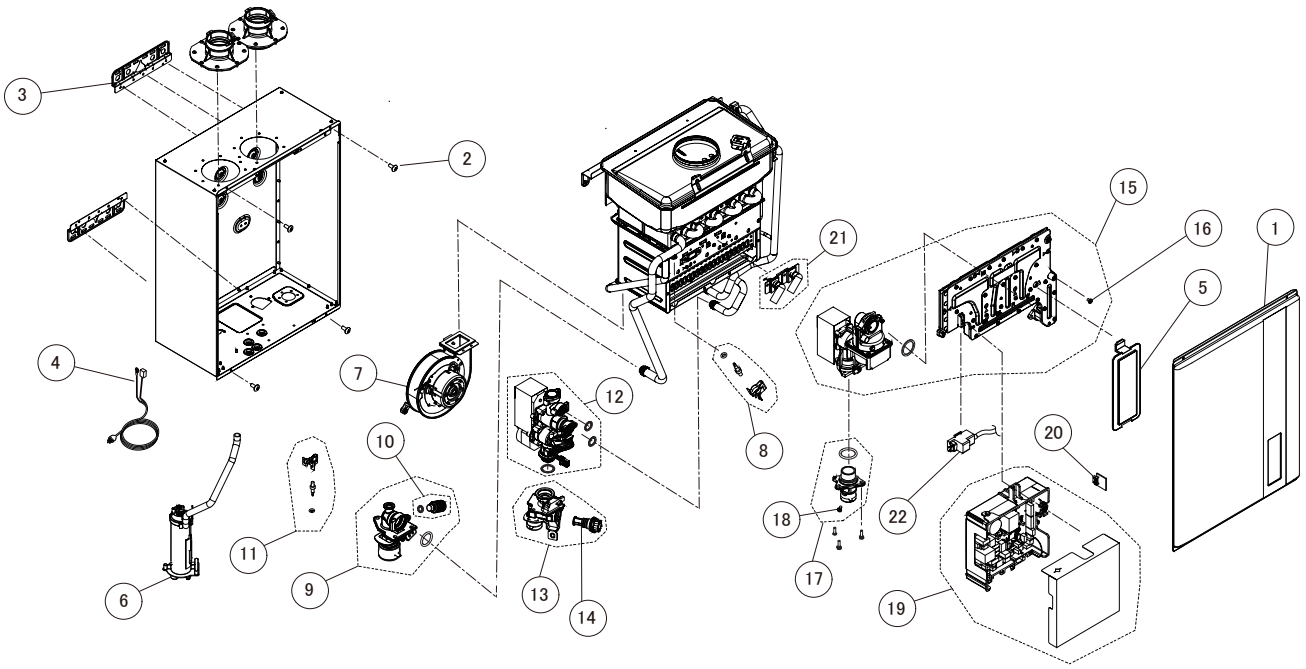

1	Front Cover Final Assembly
2	Front Cover Screw
3	Cabinet Bracket
4	Power Cord
5	Display / Controller
6	Condensate Drain
7	Blower Motor
8	HEX Thermistor
9	Hot Water Connection
10	Drain Valve
11	Hot Water Thermistor

12	Water Control Valve
13	Inlet Water Connection
14	Water Filter
15	Manifold/Gas Valve Kit
16	Manifold Screw
17	Gas Connection
18	Inlet Gas Screw
19	Control Board
20	Program Chip
21	Igniter / Flame Rod Kit
22	Igniter Module

LIMITED WARRANTY

For the RHEEM®, RUUD®, Richmond®, Paloma®, and EcoSmart® Residential Tankless Gas Water Heaters.

GENERAL

This Limited Warranty is only available to the original owner of the water heater at the original installation location. This Limited Warranty is not transferable.

Rheem Sales Company, Inc. (Rheem) warrants this tankless gas water heater, and its component parts, to be free from defects in materials and manufacture, under normal use and service, for the Applicable Warranty Period specified below. At its option, Rheem will repair or replace the defective water heater, or defective component part(s), in accordance with the terms of this Limited Warranty, if it fails in normal use and service during the Applicable Warranty Period. The replacement water heater must be manufactured by Rheem under one of the covered brand names. The replacement component part(s) must be Rheem authorized component part(s). The replacement unit will be warranted only for the unexpired portion of the original unit's Applicable Warranty Period.

Rheem strongly recommends that this tankless water heater be installed by a contractor that is licensed, state qualified and trained on Rheem's tankless products because improper installation may invalidate warranty coverage.

EFFECTIVE DATE

The Effective Date of warranty coverage (or the beginning of the Applicable Warranty Periods) is the date of the original installation of the water heater, if properly documented. Otherwise, it is the date of manufacture of the water heater plus ninety (90) days.

APPLICABLE WARRANTY PERIODS: The Applicable Warranty Period depends on the type of installation, as described below:

Residential: a Single Family Dwelling

Twelve (12) years from the Effective Date for the heat exchanger, five (5) years from the Effective Date for the component parts, and one (1) year from the Effective Date for certain labor as described under the heading, LABOR, SHIPPING AND PROCESSING COST.

Residential: a Single Family Dwelling used with Hydronic Force Air Heating

Ten (10) years from the Effective Date for the heat exchanger, five (5) years from the Effective Date for the component parts, and one (1) year from the Effective Date for certain labor as described under the heading, LABOR, SHIPPING AND PROCESSING COST. Provided that a Rheem manufactured/ Rheem approved potable water hydronic air handler is installed with the system.

Residential: a Single Family Dwelling with recirculation, controlled loop

Twelve (12) years from the Effective Date for the heat exchanger, five (5) years from the Effective Date for the component parts, and one (1) year from the Effective Date for certain labor as described under the heading, LABOR, SHIPPING AND PROCESSING COST. Provided that the recirculation system is an on demand type system or the pump is controlled with a temperature sensor (aquastat) and timer.

Residential: a Single Family Dwelling with recirculation, uncontrolled loop

Three (3) years from the Effective Date for the heat exchanger, three (3) years from the Effective Date for the component parts, and one (1) year from the Effective Date for certain labor as described under the heading, LABOR, SHIPPING AND PROCESSING COST, if the water heater is installed in a system in which the water is re-circulated using a continuously operating pump.

Commercial: any installation that is not a single family dwelling

Five (5) years from the Effective Date for the heat exchanger, five (5) years from the Effective Date for the component parts, and one (1) year from the Effective Date for certain labor as described under the heading, LABOR, SHIPPING AND PROCESSING COST.

Commercial: with recirculation, controlled loop

Five (5) years from the Effective Date for the heat exchanger, five (5) years from the Effective Date for the component parts, and one (1) year from the Effective Date for certain labor as described under the heading, LABOR, SHIPPING AND PROCESSING COST. Provided that the recirculation system is an on demand type system or the pump is controlled with a temperature sensor (aquastat) and timer.

Commercial: with recirculation, uncontrolled loop

Three (3) years from the Effective Date for the heat exchanger, three (3) years from the Effective Date for the component parts, and one (1) year from the Effective Date for certain labor as described under the heading, LABOR, SHIPPING AND PROCESSING COST, if the water heater is installed in a system in which the water is re-circulated using a continuously operating pump.

WARRANTY EXCLUSIONS

This Limited Warranty will **not** cover:

a) Damages, malfunctions or failures resulting from:

Chart for Recommended Water Quality Levels									
pH	(Total Dissolved Solids) TDS	Free Carbon Dioxide (CO_2)	Total Hardness	Aluminum	Chlorides	Copper	Iron	Manganese	Zinc
6.5–8.5	Up to 500 mg/L	Up to 15 mg/L	Up to 200 mg/L	0.05 to 0.2 mg/L	Up to 250 mg/L	Up to 1.0 mg/L	Up to 0.3 mg/L	Up to 0.05 mg/L	Up to 5 mg/L

Cited reference: National Secondary Drinking Water Regulations

1. Installation of the water heater in environments in which water quality levels DO NOT fall within the ranges listed in the table below:

b) Operating the water heater in a corrosive or contaminated atmosphere, including without limitation damages, malfunctions or failures caused by lime, mineral build-up, or scale.
c) Service trips to your business to teach you how to install, use, or maintain this water heater or to bring the water heater installation into compliance with local building codes and regulations or manufacturer's installation requirements.
d) Water heater unit installed for use in: spa or pool heating; a recreational vehicle; a boat or any other watercraft.
e) Water heater unit installed in any circulating system in which the temperature of the incoming water to the water heater is in excess of 140° f.
f) Water heater unit that is installed in any installation supplying radiant heat, such as in floor, baseboard, radiators, snow melt or closed loop systems, or any system using glycol or non-potable water.
g) Damages, malfunctions or failures resulting from failure to install the water heater in accordance with applicable building codes/ordinances or good plumbing and electrical trade practices.
h) Damages, malfunctions or failures resulting from improper installation or failure to operate and maintain the unit in accordance with the manufacturer's instructions.
i) Performance problems caused by improper sizing of the water heater or the gas supply line, the venting connection, combustion air openings, electric service voltage, wiring, or fusing.
j) Damages, malfunctions or failures caused by improper conversion from natural gas to LP gas or LP gas to natural gas fuel source.
k) Damages, malfunctions or failures caused by operating the water heater with any parts removed or with modified, altered, or unapproved parts installed.
l) Damages, malfunctions or failures caused by abuse, accident, fire, flood, freeze, lightning, acts of God and the like.
m) Heat exchanger failures (leaks) caused by operating the water heater in a corrosive or contaminated atmosphere or damages, malfunctions or failures caused by lime, mineral build-up, or scale.
n) Damages, malfunctions or failures caused by operating the unit at water temperatures exceeding the maximum setting of the operating, or high limit, control.
o) Heat exchanger failures caused by operating the water heater when it is not supplied with potable water, free to circulate at all times.
p) Damages, malfunctions or failures caused by subjecting the heat exchanger to pressures, or firing rates, greater than those shown on the rating label.
q) Damages, malfunctions or failures resulting from the use of any attachment, including any energy saving device, not authorized by Rheem.
r) Units installed outside the fifty states (and the District of Columbia) of the United States of America and Canada.
s) Units removed from the original installation location and reinstalled elsewhere.
t) Units that have had their rating labels altered, tampered with, or removed. A water heater should not be operated if the rating label is removed.

LABOR, SHIPPING, AND PROCESSING COSTS

For one (1) year after the Effective Date, Rheem will cover reasonable labor costs necessary to repair or replace a tankless water heater or component part that Rheem determines to be defective and covered by this Limited Warranty. The warranty service must be performed by a contractor that is licensed, state qualified, and trained to install and service Rheem's tankless water heaters. This Limited Warranty does not cover any labor expenses for general service, inspection, reinstallation, permits, removal and disposal of the failed water heater or defective component part(s), or updating the installation to meet manufacture or local code requirements. All such expenses are your responsibility.

Rheem will pay the transportation costs for an "in-warranty" replacement water heater, or "in-warranty" replacement component part(s), to a convenient delivery point (selected by Rheem) near the place the original water heater, or original component part(s), is located: such as a local water heater distributor. You must pay any local freight charges, including the cost of returning the failed water heater, or defective component part(s) to a convenient shipping location (selected by Rheem): such as a local Rheem distributor.

Rheem does not authorize, recommend, or receive any benefit from any claims processing or similar fees charged by others to process warranty claims for any water heater or component part(s). Rheem will not reimburse any party for these, or any other, fees not specifically covered in this Limited Warranty document.

HOW TO OBTAIN WARRANTY CLAIM ASSISTANCE

Any claim for warranty assistance must be made promptly. First, determine if your water heater is "in-warranty" (that is, within the Applicable Warranty Period). You can determine your unit's warranty status by adding its Applicable Warranty Period to its date of installation. However, if you **DO NOT** have documentary proof of your water heater's date of installation, your unit's warranty status will be based on its date of manufacture as determined from the serial number. Add the Applicable Warranty Period plus ninety (90) days to the date of manufacture to determine whether the water heater is still covered by this Limited Warranty. You may also determine your unit's warranty status by obtaining the complete model number, complete serial number, and date of installation of your water heater and then accessing the "Warranty Verification" information on Rheem Water Heaters' internet website (www.rheem.com) or contacting Rheem's Claims Department (telephone (800) 621-5622) during normal business hours (in the Central Time Zone) to determine if the Applicable Warranty Period has expired.

If your water heater is "in-warranty", contact the plumber, or mechanical contractor, that installed it for assistance with the warranty repairs, or replacement, required. Rheem Water Heaters' Technical Service personnel are available to assist you (by telephone at (866) 720-2076) in obtaining "in-warranty" service or to answer your questions about the operation or repair of your water heater during normal business hours (in the Central Time Zone). Be prepared to provide the plumber, mechanical contractor, or Rheem Technical Service person you call with the complete model number, the complete serial number, and the date of installation of your water heater in addition to an explanation of your water heater problem.

If an exact replacement is not available, Rheem will provide you with the current model of your water heater, or component part(s), or a replacement unit with comparable operating features. If government regulations or industry certification or similar standards require the replacement water heater, or replacement component part(s), to have features not found in the defective water heater, or the defective component part(s), you will be charged for the difference in price represented by those required features. If you pay the price difference for those required features and/or to upgrade the size and/or other features available on a replacement new water heater, you will also receive a complete new Limited Warranty (with the full Applicable Warranty Period) for the replacement new water heater.

Rheem reserves the right to inspect, or require the return of, the failed water heater or the defective component part(s). Each "in-warranty" failure water heater must be made available to Rheem (with the rating label and all the component parts intact) in exchange for the replacement water heater. Each defective "in-warranty" component part to be replaced must be returned to Rheem in exchange for the replacement component part.

Warranty compensation is subject to validation of "in-warranty" coverage by Rheem Claims Department personnel.

- To obtain warranty compensation for an "in-warranty" water heater failure, you must provide Rheem with the failed water heater (with the rating label and all the component parts intact) the complete model number and the complete serial number of the Rheem or Ruud water heater that replaced the failed unit; and the date the original water heater failed. You may also be required to provide documentary proof of the failed water heaters date of installation to establish its "in-warranty" status.

- To receive warranty compensation for an "in-warranty" defective component part, you must provide Rheem with: the defective component part; the complete model number and the complete serial number of the Rheem or Ruud water heater from which the defective component part was removed; and the date the defective component part failed. You may also be required to provide documentary proof of the date of installation of the Rheem or Ruud water heater from which the defective part was removed – or the date of purchase of the part (If it was purchased separately) – to establish the "in-warranty" status of the defective component part.

- If Rheem determines that the water heater or component part returned to Rheem is free of defects in material and manufacture and/or that it was damaged by improper installation or other cause not covered by this Limited Warranty, the warranty claim for the product, component part and/or labor maybe denied.

Warranty claim documentation should be mailed promptly to Rheem Water Heaters, Claims Department, 800 Interstate Park Drive, Montgomery, Alabama 36109, or in Canada, 125 Edgeware Rd. Unit 1, Brampton, ON, Canada L6Y 0P5

EXCLUSIVE WARRANTY – LIMITATION OF LIABILITY

THIS LIMITED WARRANTY IS THE SOLE AND EXCLUSIVE WARRANTY PROVIDED IN CONNECTION WITH THIS RHEEM®, RUUD®, RICHMOND®, PALOMA® AND ECOSMART® RESIDENTIAL TANKLESS GAS WATER HEATER UNIT (THE "WATER HEATER"). No one is authorized to make any other warranties on behalf of Rheem. **ANY IMPLIED WARRANTIES, INCLUDING MERCHANTABILITY, OR FITNESS FOR A PARTICULAR PURPOSE, SHALL NOT EXTEND BEYOND THE APPLICABLE WARRANTY PERIODS, SPECIFIED PREVIOUSLY. RHEEM'S SOLE LIABILITY, WITH RESPECT TO ANY DEFECT, SHALL BE AS SET FORTH IN THIS LIMITED WARRANTY, AND ANY CLAIMS FOR INCIDENTAL OR CONSEQUENTIAL DAMAGES (INCLUDING DAMAGE FROM WATER LEAKAGE) ARE EXCLUDED.** Some states **DO NOT** allow limitations on how long an implied warranty lasts, or for the exclusion of incidental or consequential damages, so the above limitations or exclusions may not apply to you.

This Limited Warranty gives you specific legal rights, and you may also have other rights, which vary from state to state.

DO NOT RETURN THIS WATER HEATER OR PART TO RHEEM WITHOUT A RETURN AUTHORIZATION.

This document is for reference only and does not replace the original warranty document found in the back of the Use and Care manual provided with the tankless water heater.

DO NOT RETURN THIS DOCUMENT TO RHEEM.
KEEP IT WITH YOUR WATER HEATER OR BUSINESS RECORDS.

Name of Owner: _____

Owner's Address: _____

Name of Plumber/
Mechanical Contractor – Installer: _____

Address of Plumber/
Mechanical Contractor – Installer : _____

Telephone Number of Plumber/
Mechanical Contractor – Installer: _____

Date of Water Heater Installation: _____

Model Number of Your Water Heater: _____

Serial Number of Your Water Heater: _____

NOTES