Müeller
AUSTRIA

PRO RANGE HOOD

HAF-49

Instruction Manual

Your satisfaction is guaranteed. If you are not completely satisfied with our PRO RANGE HOOD and the results it brings, we insist that you let us know. We'll help you make the Range Hood work for you, or we'll refund your money.

TABLE OF CONTENTS

IMPORTANT SAFETY INSTRUCTIONS 2

INSTALLATION REQUIEREMENTS 3

Parts Supplied 3

Location Requirements 4

Ventilation Requirements 5

Electrical Requirements 5

INSTALLATION INSTRUCTIONS 5

Prepare Location 5

Install the Range Hood 6

RANGE HOOD USE 9

Range Hood Controls 9

Operating the Hood 9

RANGE GOOD CARE 10

Cleaning & Maintenance 10

IMPORTANT SAFETY INSTRUCTIONS

WARNING: TO REDUCE THE RISK OF FIRE, ELECTRIC SHOCK, OR INJURY TO PERSONS, READ THE FOLLOWING:

• Use this unit only in the manner intended by the manufacturer. If you have any questions, please

contact the manufacturer.

• Make sure that the voltage indicated on the rating plate of the appliance corresponds to your outlet voltage.

• Do not attempt to alter the technical features of the range hood as this poses a safety risk.

• Installation work and electrical wiring must be done by a qualified professional(s) in accordance with all applicable codes, standards, and fire-rated constructions.

• The manufacturer does not accept any liability for any damage or injury caused by improper installation.

• **ATTENTION!** This range hood is wall-mounted ONLY.

• When cutting or drilling into walls or ceilings, be aware of electrical wires, piping, and other utilities.

• To prevent back draft, sufficient air is needed for proper combustion.

CAUTION: To reduce the risk of fire and to properly exhaust air, be sure to duct air outside - DO NOT vent exhaust air into attics, crawl spaces, garages, or within walls and ceilings.

CAUTION: For general ventilation use only. Do not use to exhaust hazardous or explosive materials and vapors.

• Do not operate the range hood with a damaged cord or plug. Discard the hood or return to an authorized service facility for further examination and/or repair.

• Before servicing or cleaning the unit, switch the power off, and lock the electrical panel. This will prevent the power from accidentally turning on. If the electrical panel does not lock, secure a warning label, such as a tag, to the electrical panel.

• The appliance is not intended to be used or cleaned by children or persons with reduced physical, sensory, or mental capabilities or lack of experience and knowledge of the hazards involved.

WARNING: TO REDUCE THE RISK OF A RANGE HOOD GREASE FIRE, READ THE FOLLOWING:

• Never leave cooking elements unattended at high settings. Boil-over can cause smoke and grease to spill over that may ignite. Heat oils slowly on low or medium settings.

• Always turn hood ON when cooking at high heat or when flambéing food.

• Clean ventilation fans frequently. Grease should not be allowed to accumulate on the fan or filter.

• Use proper pan size. Always use cookware appropriate for the size of the surface element.

WARNING: TO REDUCE THE RISK OF INJURY, IN THE EVENT OF A RANGE TOP GREASE FIRE, READ THE FOLLOWING:

• SMOTHER FLAMES with a close-fitting lid, cookie sheet, or metal tray, then turn off the burner. BE CAREFUL TO PREVENT BURNS. If the flames do not go out immediately, EVACUATE AND CALL THE FIRE DEPARTMENT.

• NEVER PICK UP A FLAMING PAN - you may be burned.

• DO NOT USE WATER, including wet dishcloths or towels - a violent steam explosion will result.

INSTALLATION REQUIREMENTS

PARTS SUPPLIED

A	Range Hood	x1	H	Range Hood Mount	X1
B	Power cord (attached to the Range Hood)	x1	I	Wall Mount	x1
C	Wall Anchor (for the Wall Mount)	x6	J	Exhaust Duct	x1
D	Wall Anchor Screw 4x40 (to screw the Wall Mount to the wall)	x6	K	Exhaust Duct Base	x1
E	Flat Head Screw 4x18 (to fasten the Range Hood Mount to the Cover)	x2	L	Exhaust Duct Cover	x1
F	Pan Head Tapping Screw 4x8 (to fasten the Exhaust Duct to the Exhaust Duct Base)	x2	M	Grease Collector	x1
G	Taptite Screw 4x10 (to fasten the Exhaust Duct Cover to the Hood's main body)	x4			

LOCATION REQUIREMENTS

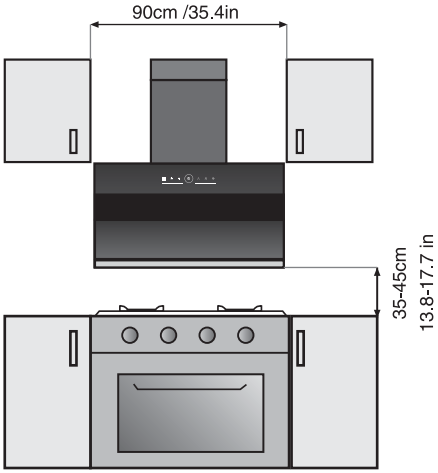

Pic. 1-A:
Installation Type – STAND ALONE

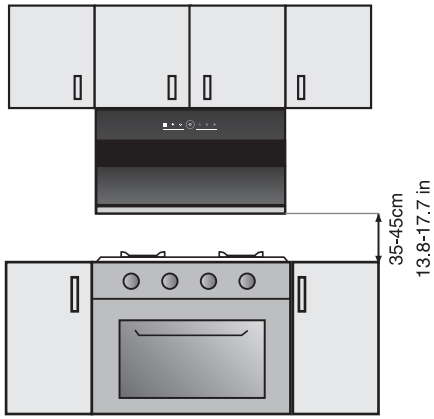

Pic. 1-B:
Installation Type - EMBEDED

This range hood has been designed to be wall-mounted above a Gas stove/Hob. Before starting the installation, consideration should be given to how the installation is to be carried out, ensuring adequate space and clearances above the Gas stove/Hob.

When installed, the range hood must be positioned at least 13.8 in (35 cm) above the gas stove.

If the exhaust pipe is too long or there are too many bends, please select a suitable position to install the Range Hood to make the appliance reach its perfect sucking-in smoke mode.

PRIOR TO INSTALLATION:

- Unpack range hood and ensure all listed parts are in the box.
- It is recommended for the vent system to be installed before the hood is installed.
- Before making cutouts, make sure there is proper clearance within the ceiling or walls for the exhaust vent.
- It is recommended that a professional installer performs the range hood installation.

VENTILATION REQUIREMENTS:

This range hood must be ventilated to the outdoors.

Do not ventilate the range hood into an attic or other enclosed areas.

ELECTRICAL REQUIREMENTS:

Ensure there is availability of an electrical power socket to power the range hood before fixing to the wall.

Observe all governing codes and ordinances. Ensure that the electrical installation is adequate and in accordance with the National Electrical Codes, ANSI/NFPA 70 (latest edition), all local codes, and ordinances.

- A 120-volt, 60 Hz., AC only, fused electrical circuit is required.

INSTALLATION INSTRUCTIONS

PREPARE LOCATION:

- It is recommended for the vent system to be installed before hood is installed.
- Before making cutouts, make sure there is proper clearance within the ceiling or walls for the exhaust vent.
- Disconnect the power.

! IMPORTANT:

This installation is for mounting the product to a wall. Ensure your wall has the proper support to hold the range hood weight (27 kg / 59.5 lbs).

These instructions are general guidelines; please consult your installation specialist regarding the best type of mounting hardware and support system based on your wall construction. All wall-mounted range hoods, if possible, should be installed and supported by studs behind the wall (hardware not included). In the event studs are not in alignment with the wall mount mounting plate holes, a wooden cross support system will need to be retrofitted to your existing studs. All homes are different, and installations will vary.

NOTE:

The distance between the stove and the Wall Mount should be at least **87 cm (34.25 in)** to maintain the minimum distance requirement of 35 cm (13.8 in) between the stove and the bottom of the Range Hood.

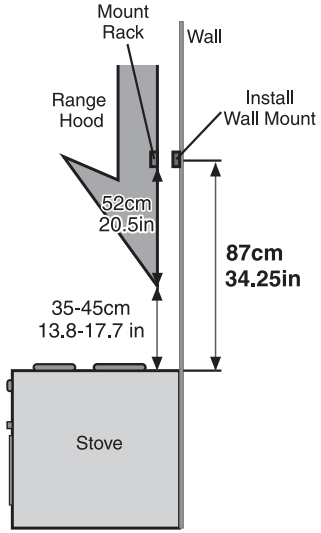

INSTALL THE RANGE HOOD

1. Find the center of the wall where you are installing the hood. Mark your center line to the ceiling and measure out from the center to mark the position of your four mounting points. The (4) mounting holes will be found on the **Wall Mount (part I).**

Make sure your mounting points are leveled when you mark them. **It is recommended to install the hood directly into wood supports.**

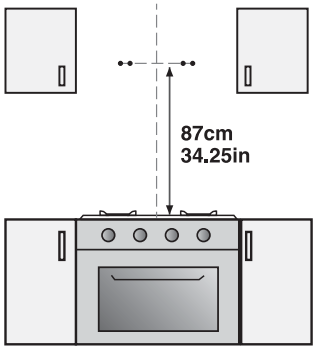

2. Mark the mounting points, use the 8 drill bit to drill four holes, then insert the four **Wall Anchors (part C)** directly into the wall.

Position the **Wall Mount (part I)** over the wall anchors and secure with four mounting screws provided **(part D)**.

NOTE:

Make sure that the hanging lips of the Wall Mount are pointed upward because you will need to hang the Hood on them.

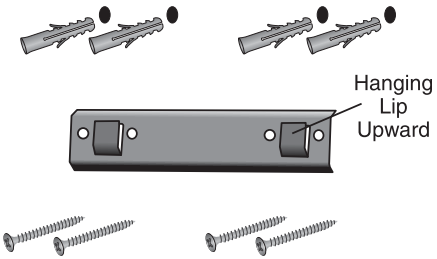

3. Attach the **Exhaust Duct Base (part K)** to the **Exhaust Duct (part J)** using the **two screws provided (part F).**

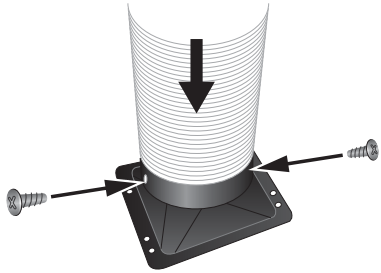

4. Unscrew the square **Rubber Pad** at the exhaust opening of the range hood.

Align the Rubber Pad with the bottom of the **Exhaust Duct Base (part K),** and then reattach to the opening of the range hood with the same 4 screws.

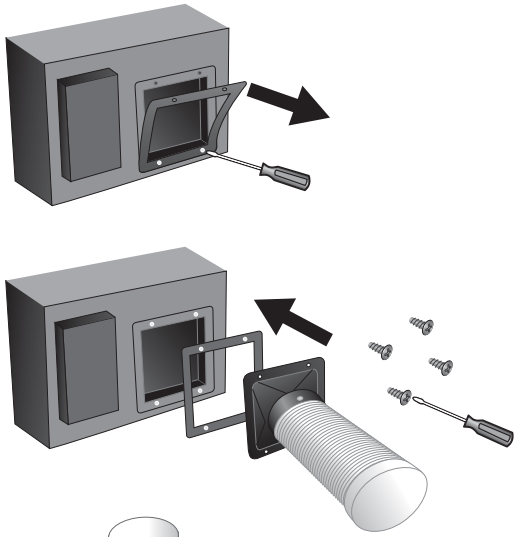

5. Carefully stand the Range Hood in the upright position.

Align the stainless steel finished **Exhaust Duct Cover (part L)** around the face of the range hood main body. Secure this cover with four **Taptite Screws (part G)** to fasten the cover to the range hood's main body.

Once secure, carefully lift up the secondary inner cover located behind the stainless steel finished face, so that the cover doubles in height.

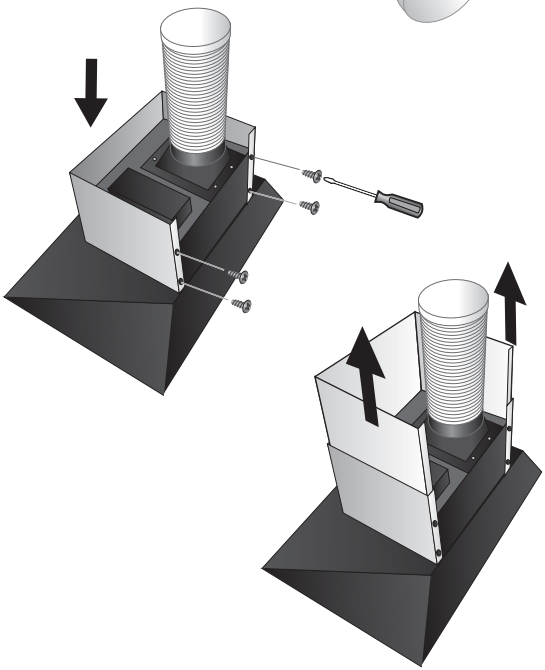

6. Fasten the Range Hood Mount (part H) to the upper half of the Exhaust Cover (part L). Ensure the flat side of the Range Hood Mount is facing externally so that it can be mounted securely.

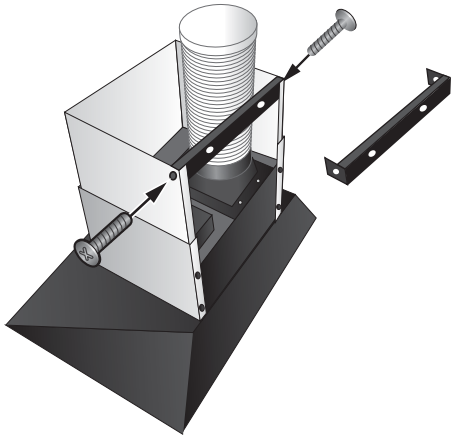

7. Carefully hang the **Range Hood** by positioning the **Range Hood Mount** onto the hanging lips of the installed **Wall Mount.**

Connect the Open end of the Exhaust Duct to the vent.

Connect the **Power Cord** to the electrical socket.

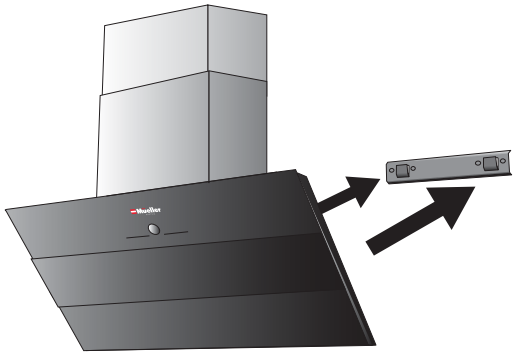

8. Once the Range Hood is securely mounted, attach the **Grease Collector (part M).** Align with the tabs located at the base of the face of the Range Hood and lock into position.

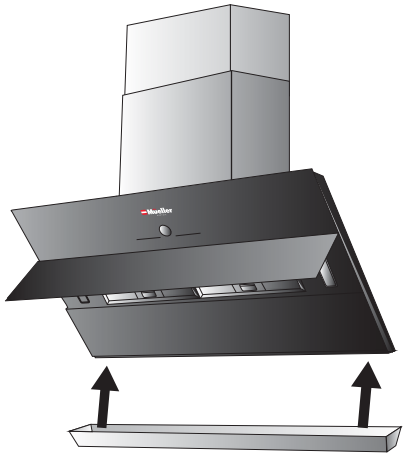

RANGE HOOD USE

RANGE HOOD CONTROLS:

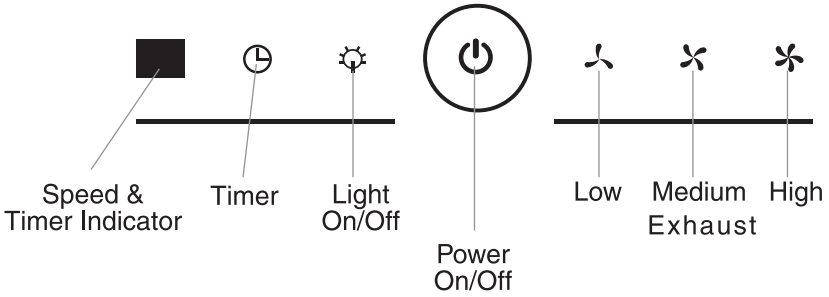

OPERATING THE HOOD:

- **To turn the fan ON** press the Power Button and select one of the 3 speeds:

Low (Speed/Timer Indicator shows F1)

Medium (Speed/Timer Indicator shows F2)

High (Speed/Timer Indicator shows F3)

- **To turn the fan OFF,** press the Power button.

- **To operate light on/off** press the Light On/Off button

(Note: The fan and light operate independently of each other).

- **For automatic shut-off,** press the Timer button

- 1 min – press once,
- 3 min – press twice,
- 5 min – press three times,
- 15 min – press four times.

Pressing the Timer button once again will deactivate the timer.

RANGE HOOD CARE

CLEANING & MAINTENANCE:

IMPORTANT: Clean the hood and panel filters frequently according to the following instructions.

Exterior Surfaces:

To avoid damage to the exterior surface, do not use steel wool or soap-filled scouring pads. Always wipe dry to avoid water marks.

Cleaning Method:

- Liquid detergent soap and water, or all-purpose cleaner.
- Wipe with a soft damp cloth or non-abrasive sponge, rinse with clean water, and wipe dry.

Filters:

1. Remove the filter by pushing in the tab of the spring **release handles** and then pulling down the filters.
2. Wash filters with hot detergent solution.
3. Make sure the filters are completely dry before reinserting into the range hood.
4. Reinstall the filters one by one, making sure that spring release handles are located towards the back of the range hood.

NOTE: Replace the panel filters before operating hood.

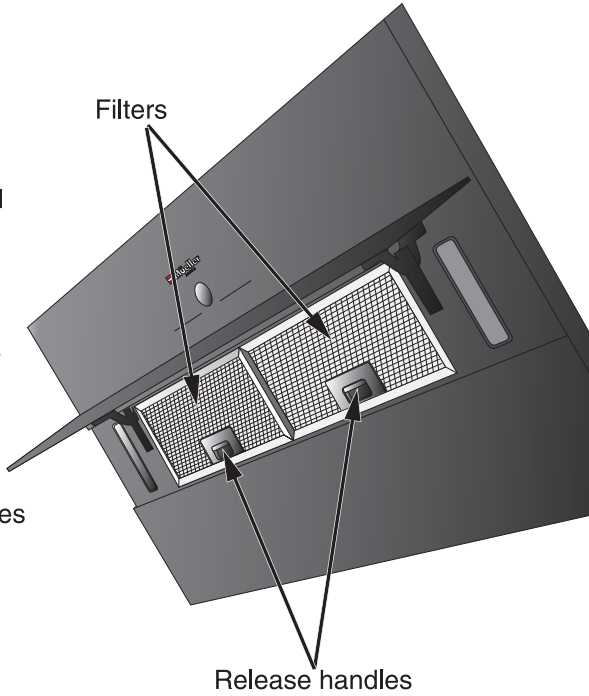

Grease Collector:

Periodically remove the grease tray and clean build up grease collection.

SPECIFICATIONS:

Dimensions: 35.4/16.3/28.7 in; (900/415/730 mm)

Weight: 59.5lbs / 27kg

Filter size: 12/5.4 in; (305/138 mm)

Müeller

AUSTRIA

100% CUSTOMER SATISFACTION GUARANTEED MONEY BACK

Your purchase comes with a 100% satisfaction guarantee from Müeller

If you are not happy with the product for any reason, please contact us at **support@muellerdirect.com** or **888-632-9981** with your feedback or questions, and we will do our best to make things right for you!

Müeller USA

168 Mason Way Unit #4A,
City of Industry, CA 91746

Telephone: (888) 632-9981

E-mail: support@muellerdirect.com

Web: www.muellerdirect.com