CHAMBERLAIN

www.chamberlain.com

Owner's Manual

Belt Drive Garage Door Opener

Model: B2310, B4310, B5330 (Camera)
Model: B3000, B3010, B4210

FOR RESIDENTIAL USE ONLY

PRE-PROGRAMMED REMOTE CONTROL INCLUDED

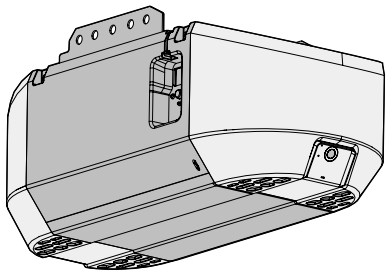

Model: B2310, B4310, B5330

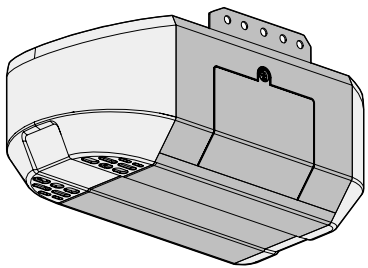

Model: B3000, B3010, B4210

myQ® App account registration and Wi-Fi® connection required before commencing garage door opener installation.

Use QR code below to download the free myQ app.

Monitor and control your garage from anywhere and get real-time alerts with peace of mind.

Download on the App Store

GET IT ON Google Play

Available on most iOS and Android Devices

- Please read this guide and the enclosed safety materials carefully!
- The door WILL NOT CLOSE unless the Protector System® is connected and properly aligned.
- Periodic checks of the garage door opener are required to ensure safe operation.
- This garage door opener is ONLY compatible with myQ® and Security+ 3.0™ accessories.
- DO NOT install on a one-piece door if using devices or features providing unattended close. Unattended devices and features are to be used ONLY with sectional doors.
- Attach warning labels to the location indicated on label.

Register your new operator to receive updates and offers from The Chamberlain Group.

Scan the QR Code to start your product registration.

c UL us LISTED

Contents

Safety Symbol and Signal Word Review **2**
Preparation **3**
Tools Needed 4
Additional Items You May Need: 4
Carton Inventory 5
Hardware 6
Assembly **7**
Installation **12**
Adjustments **31**
Battery Backup **34**
myQ® App Control **35**
Camera **36**
Operation **37**
Maintenance **41**
Troubleshooting **42**
Diagnostic Chart 42
Additional Troubleshooting 43
Wi-Fi® Troubleshooting 43
Warranty **44**
Automatic Garage Door Opener Safety & Maintenance Guide **46**
Routine Maintenance Can Prevent Tragedies **47**
Repair Parts **48**
Rail Assembly Parts 48
Installation Parts 48
Replacement Parts 49
Accessories 49

Safety Symbol and Signal Word Review

This garage door opener has been designed and tested to offer safe service provided it is installed, operated, maintained and tested in strict accordance with the instructions and warnings contained in this manual.

WARNING

Mechanical

WARNING

Electrical

When you see these Safety Symbols and Signal Words on the following pages, they will alert you to the possibility of ***serious injury or death*** if you do not comply with the warnings that accompany them. The hazard may come from something mechanical or from electric shock. Read the warnings carefully.

CAUTION

When you see this Signal Word on the following pages, it will alert you to the possibility of damage to your garage door and/or the garage door opener if you do not comply with the cautionary statements that accompany it. Read them carefully.

WARNING: This product can expose you to chemicals including lead, which are known to the State of California to cause cancer or birth defects or other reproductive harm. For more information go to www.P65Warnings.ca.gov.

Unattended Operation

The Timer-to-Close (TTC) feature, the myQ® App, and myQ® Garage Door and Gate Monitor are examples of unattended close and are to be used ONLY with sectional doors. Any device or feature that allows the door to close without being in the line of sight of the door is considered unattended close. The Timer-to-Close (TTC) feature, the myQ® App, and any other myQ® devices are to be used ONLY with sectional doors.

The images throughout this manual are for reference only and your product may look different.

Preparation

Check the Door

⚠ WARNING

To prevent possible SERIOUS INJURY or DEATH:

- ALWAYS call a trained door systems technician if garage door binds, sticks, or is out of balance. An unbalanced garage door may NOT reverse when required.
- NEVER try to loosen, move or adjust garage door, door springs, cables, pulleys, brackets or their hardware, ALL of which are under EXTREME tension.
- Disable ALL locks and remove ALL ropes connected to garage door BEFORE installation and operating garage door opener to avoid entanglement.
- DO NOT install on a one-piece door if using devices or features providing unattended close.
- Unattended devices and features are to be used ONLY with sectional doors.

⚠ CAUTION

To prevent damage to garage door and opener:

- ALWAYS disable locks BEFORE installing and operating the opener.
- ONLY operate garage door opener at 120V, 60 Hz to avoid malfunction and damage.

Before you begin:

1. Disable locks and remove any ropes connected to the garage door.
2. Lift the door halfway up. Release the door. If balanced, it should stay in place, supported entirely by its springs.
3. Raise and lower the door to check for binding or sticking. If your door binds, sticks, or is out of balance, call a trained door systems technician.
4. Check the seal on the bottom of the door. Any gap between the floor and the bottom of the door must not exceed 1/4" (6 mm). Otherwise, the safety reversal system may not work properly.
5. The opener should be installed above the center of the door. If there is a torsion spring or center bearing plate in the way of the header bracket, it may be installed within 4 feet (1.2 m) to the left or right of the door center.

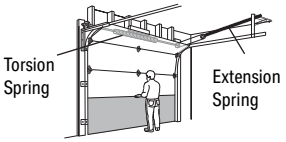

Before You Connect with Your Smartphone

Monitor and control your garage door from anywhere using the myQ® App. You will need a router with Wi-Fi® and a smartphone or other mobile device. Make sure your mobile device is connected to your Wi-Fi® network. Hold your mobile device in the place where your garage door opener will be installed and check the Wi-Fi® signal strength.

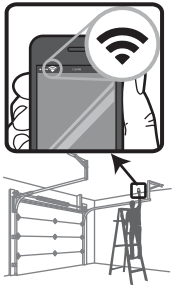

Check Signal Strength. If you see:

Wi-Fi signal is strong. You're all set!
Install your new garage door opener.

Wi-Fi signal is weak.
The garage door opener will likely connect to your Wi-Finetwork. If not, try one of the options below.

No Wi-Fi signal. Try one of the following:
- Move your router closer to the garage door opener to minimize interference from walls and other objects.
- Buy a Wi-Fi range extender.

See myQ® App Control page 35 to connect your garage door opener to your Wi-Fi® network.

Preparation

Tools Needed

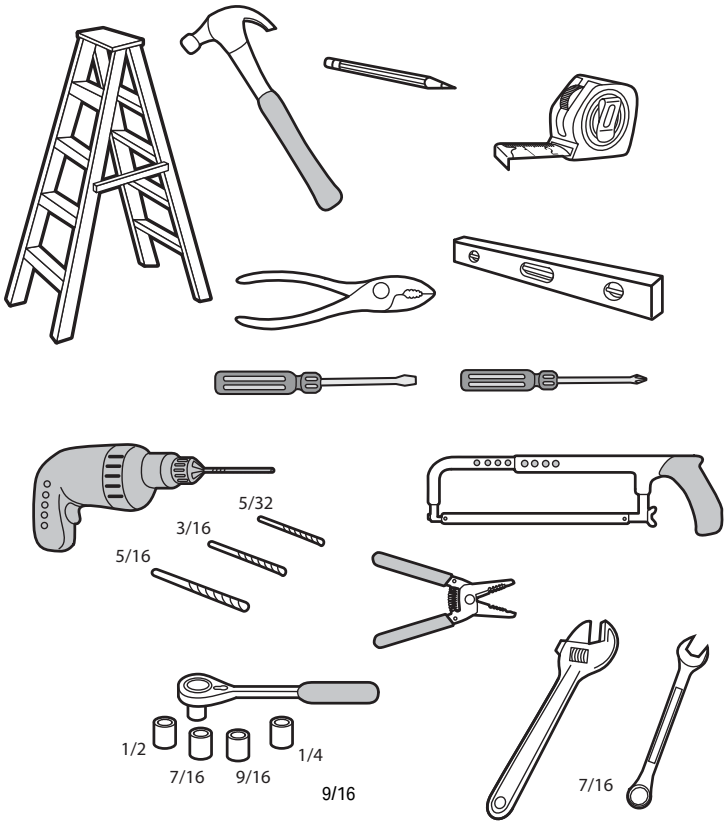

Additional Items You May Need:

Survey your garage area to see if you will need any of the following items:

- **(2) 2X4 Pieces of wood:** May be used to fasten the header bracket to the structural supports. Also used to position the garage door opener during installation and for testing the safety reversing sensors.
- **Support bracket and fastening hardware:** Must be used if you have a finished ceiling in your garage.

- **Support brackets**

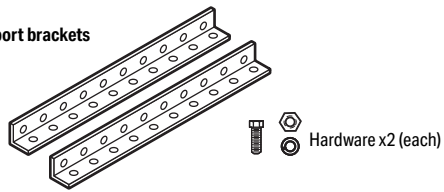

- **Hanging brackets**

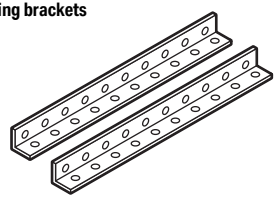

- **Extension brackets (Model 041A5281-1) or wood blocks:** Depending upon garage construction, extension brackets or wood blocks may be needed to install the safety reversing sensor.

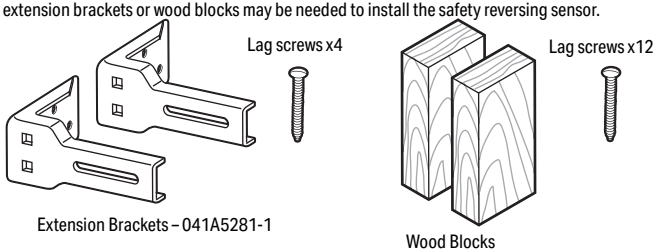

- **Fastening hardware:** Alternate floor mounting of the safety reversing sensor will require hardware not provided.
- **Door reinforcement:** Required if you have a light weight steel, aluminum, fiberglass or glass panel door.
- **Rail extension kit:** Required if your garage door is more than 7 feet (2.13 m) high.

Preparation

Carton Inventory

Save the carton and packing material until the installation and adjustment is complete. Instructions for the accessories will be attached to the accessory and are not included in this manual. The images throughout this manual are for reference only and your product may look different.

1. Header bracket
2. Pulley
3. Door bracket
4. Curved door arm
5. Straight door arm
   (Packaged inside front rail section)
6. Trolley
7. Emergency release rope and handle
8. Rail (1 front and 4 center sections)
9. Garage door opener (motor unit)
10. Belt cap retainer
11. "U" bracket
12. Belt
13. **The Protector System®**
    Safety reversing sensors with 2 conductor white and white/black wire attached: sending sensor (1), receiving sensor (1), and safety sensor brackets (2)
14. Battery Backup - B3000, B3010, B4210, B4310, B5330
15. 1-Button Remote Control / 3 - Button Remote Control (varies by model)
16. Control Panel (varies by model)
    Push Button Door Control
    Multi-Function Control Panel
    Motion Detection Control Panel
17. White and red/white wire
18. User's Guide and all warning labels

See Hardware page 6.

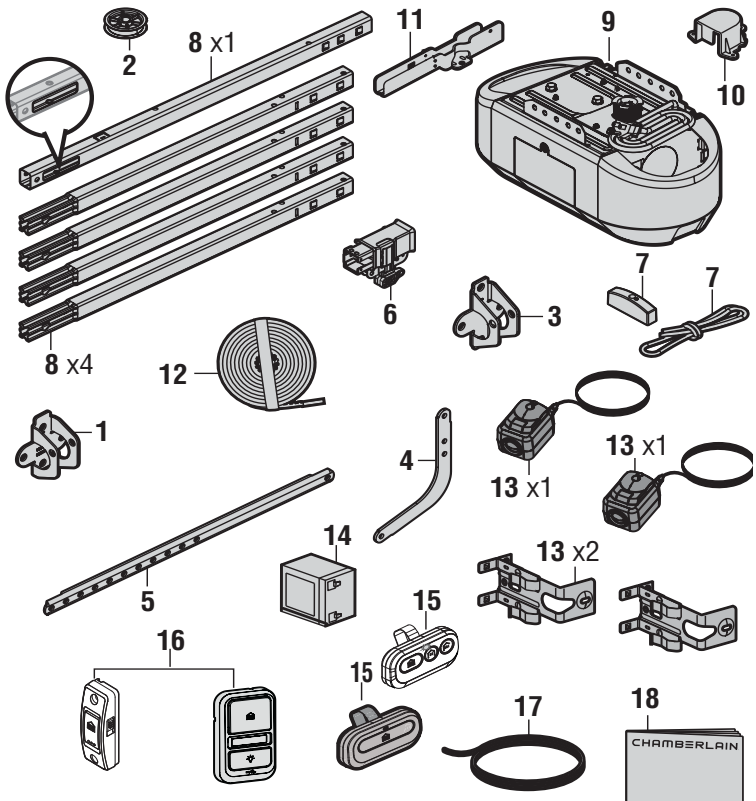

Preparation

Hardware

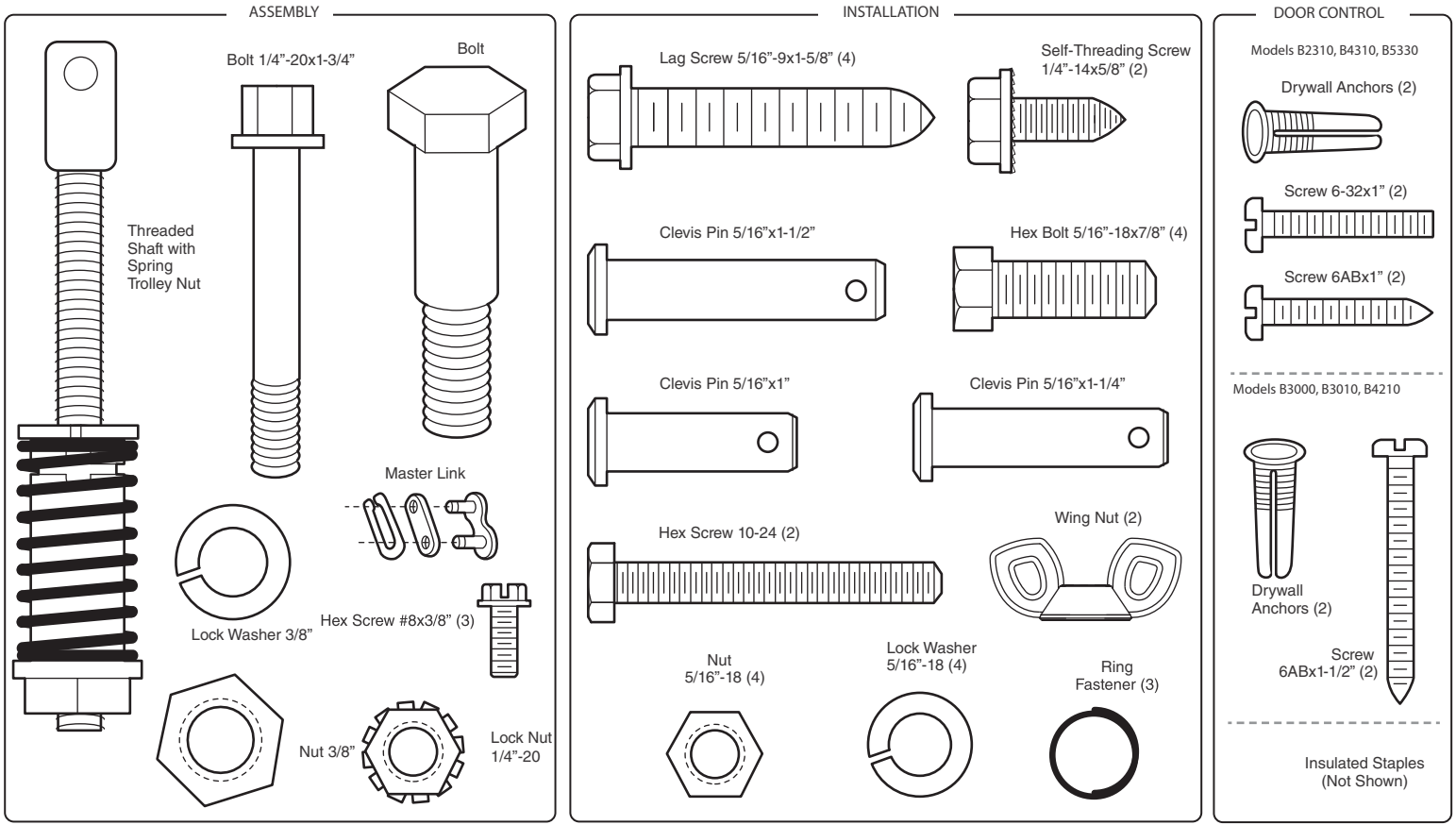

Assembly

STEP 1. Assemble the Rail and Install the Trolley

⚠ CAUTION

To prevent INJURY from pinching, keep hands and fingers away from the joints while assembling the rail.

To avoid installation difficulties, do not run the garage door opener until instructed to do so.
The front rail has a cut out "window" at the door end. The rail tab MUST be on top of the rail when assembled.

1. Remove straight door arm and set aside for installation Step 9.

NOTE: *To prevent INJURY while unpacking the rail carefully remove the straight door arm stored within the rail section.*

2. Align the rail sections on a flat surface as shown and slide the tapered ends into the larger ones. Tabs along the side will lock into place.
3. Place the motor unit on packing material to protect the cover, and rest the back end of the rail on top. For convenience, put a support under the front end of the rail.
4. As a temporary stop, insert a screwdriver into the hole in the second rail section from the motor unit, as shown.
5. Check to be sure there are 4 plastic wear pads inside the inner trolley. If they became loose during shipping, check all packing material. Snap them back into position as shown.
6. Slide the trolley assembly toward the screwdriver as shown.
7. Slide the rail onto the "U" bracket, until it reaches all the stops on the top and sides of the "U" bracket.

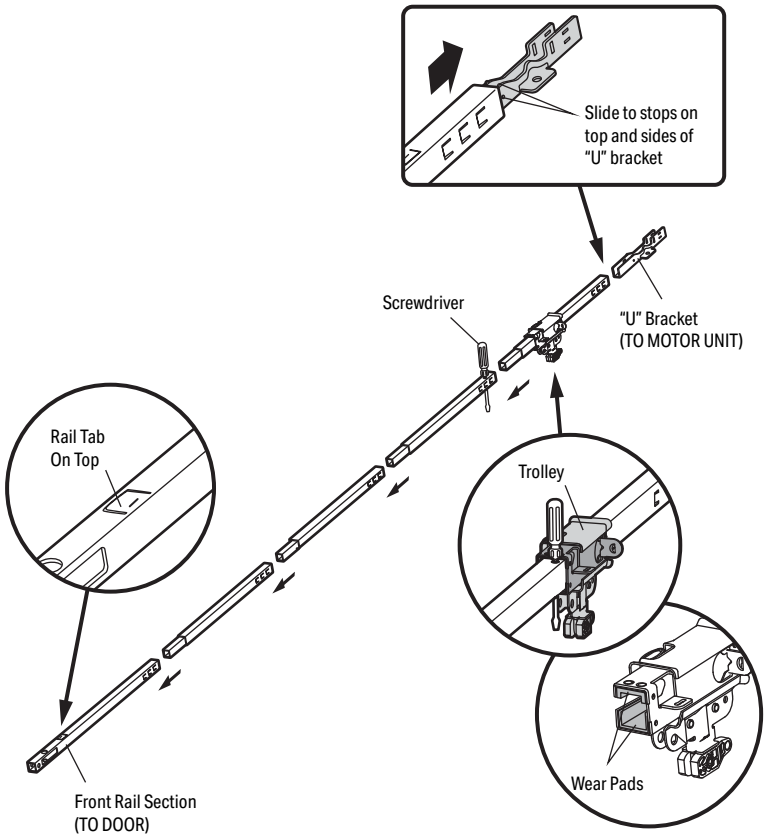

STEP 2. Fasten the Rail to the Motor Unit

⚠ CAUTION

To avoid SERIOUS damage to garage door opener, use ONLY those bolts/fasteners mounted in the top of the opener.

1. Insert a 1/4"-20 x 1-3/4" bolt into the cover protection bolt hole on the back end of the rail as shown. Tighten securely with a 1/4"-20 locknut. DO NOT over tighten.
2. Remove the bolts from the top of the motor unit.
3. Use the carton to support the front end of the rail.
4. Place the "U" bracket, flat side down, onto the motor unit and align the bracket holes with the bolt holes.
5. Fasten the "U" bracket with the previously removed bolts; DO NOT use any power tools. The use of power tools may permanently damage the garage door opener.

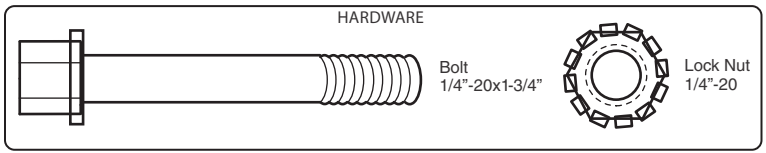

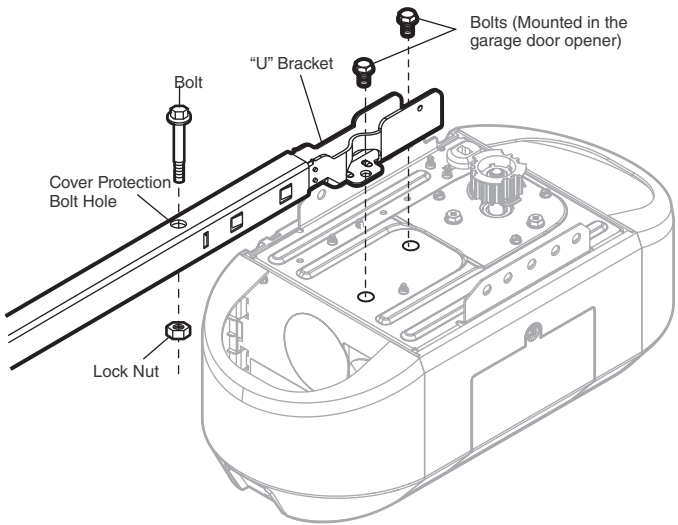

STEP 3. Install the Idler Pulley

1. Lay the belt beside the rail, as shown. Grasp the end with the hooked trolley connector and pass approximately 12" (30 cm) of belt through the window. Keep the ribbed side toward the rail, and allow it to hang until Assembly Step 4.
2. Remove the tape from the idler pulley. The inside center should be pre-greased. If dry, regrease to ensure proper operation.
3. Place the idler pulley into the window as shown.
4. Insert the idler bolt from the top through the rail and pulley. Tighten with a 3/8" lock washer and nut underneath the rail until the lock washer is compressed.
5. Rotate the pulley to be sure it spins freely.
6. Locate the rail tab. The rail tab is between the idler bolt and the trolley in the front rail section. Use a flathead screwdriver and lift the rail tab until the tab is vertical (90º).

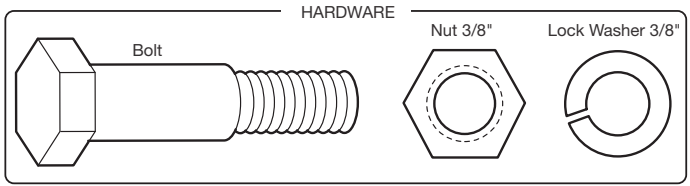

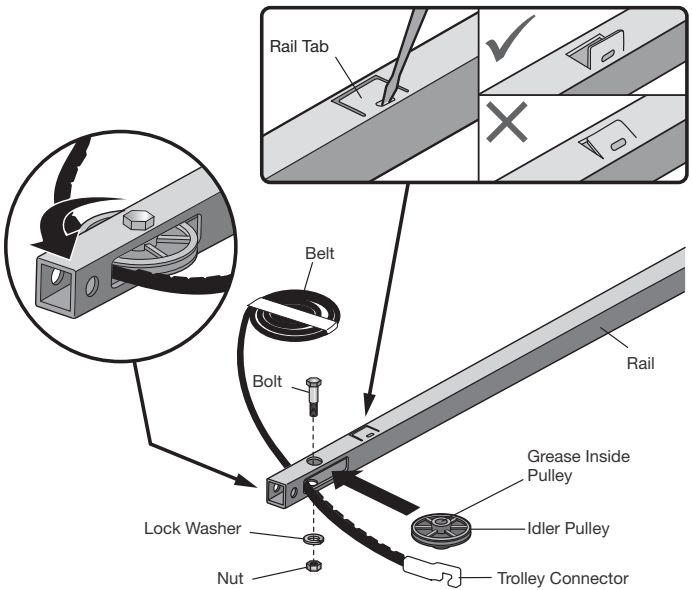

STEP 4. Install the Belt

1. Pull the belt around the idler pulley and toward the trolley. The ribbed side must contact the pulley.
2. Hook the trolley connector into the retaining slot on the trolley as shown (Figure 1).
3. With the trolley against the screwdriver, dispense the remainder of the belt along the rail length toward the motor unit and around the sprocket (Figure 2). The sprocket teeth must engage the belt.
4. Check to make sure the belt is not twisted. Connect the trolley threaded shaft with the master link (Figure 3).
5. Push pins of master link bar through holes in end of belt and trolley threaded shaft.
6. Push master link cap over pins and past pin notches.
7. Slide the closed end of the clip-on spring over one of the pins. Push the open end of the clip-on spring onto the other pin.
8. Remove the spring trolley nut from the threaded shaft.
9. Insert the trolley threaded shaft through the hole in the trolley.

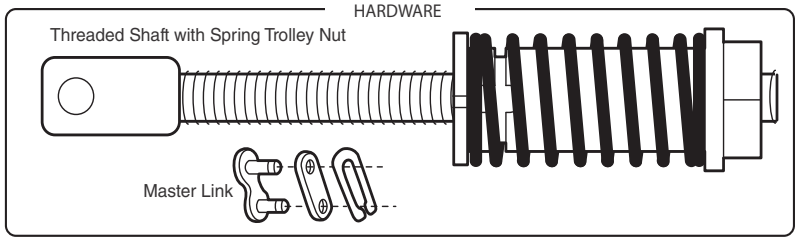

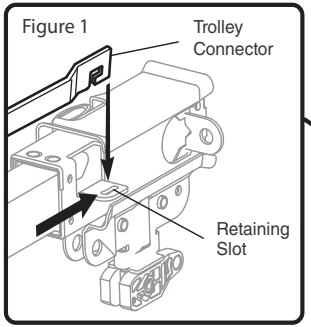

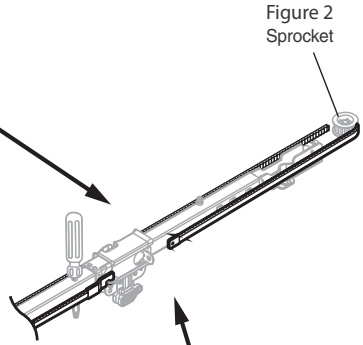

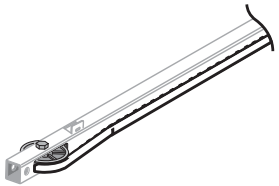

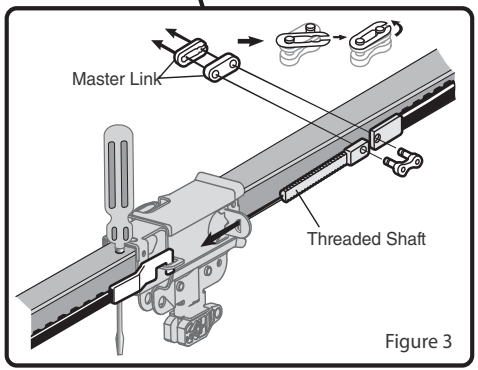

STEP 5. Tighten the Belt

1. By hand, thread the spring trolley nut on the threaded shaft until it is finger tight against the trolley. Do not use any tools. Remove the screwdriver.
2. Insert a flathead screwdriver tip into one of the nut ring slots and brace it firmly against the trolley.
3. Tighten the spring trolley nut with an adjustable wrench or a 7/16" open end wrench about a quarter turn until the spring releases and snaps the nut ring against the trolley. This sets the spring to optimum belt tension.

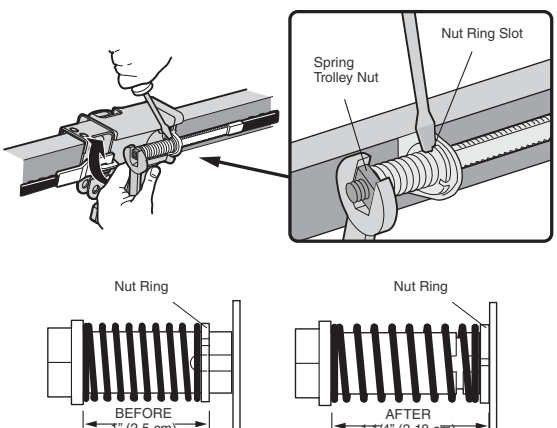

STEP 6. Install the Belt Cap Retainer

WARNING

To avoid possible SERIOUS INJURY to finger from moving garage door opener:
- ALWAYS keep hand clear of sprocket while operating opener.
- Securely attach belt cap retainer cover BEFORE operating.

1. Position the belt cap retainer cover over the sprocket as shown and fasten to the mounting plate with 8x3/8" hex screws provided.

You have now finished assembling your garage door opener. Please read the following warnings before proceeding to the installation section.

HARDWARE

Hex Screw #8x3/8"
(Mounted in the garage door opener) (3)

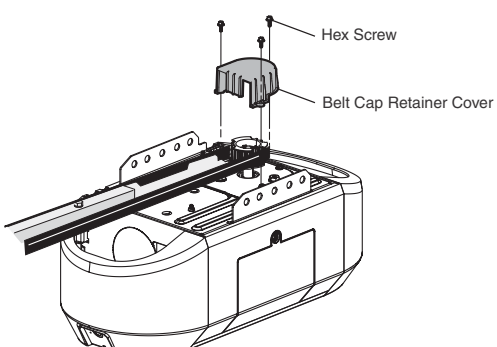

Important Safety Instructions

WARNING

To reduce the risk of SEVERE INJURY or DEATH:

1. READ AND FOLLOW ALL INSTALLATION WARNINGS AND INSTRUCTIONS.
2. Install garage door opener ONLY on properly balanced and lubricated garage door. An improperly balanced door may NOT reverse when required and could result in SEVERE INJURY or DEATH.
3. ALL repairs to cables, spring assemblies and other hardware MUST be made by a trained door systems technician BEFORE installing opener.
4. Disable ALL locks and remove ALL ropes connected to garage door BEFORE installing opener to avoid entanglement.
5. Where possible, install the door opener 7 feet (2.13 m) or more above the floor.
6. Mount the emergency release within reach, but at least 6 feet (1.83 m) above the floor and avoiding contact with vehicles to avoid accidental release.
7. NEVER connect garage door opener to power source until instructed to do so.
8. NEVER wear watches, rings or loose clothing while installing or servicing opener. They could be caught in garage door or opener mechanisms.
9. Install wall-mounted garage door control:
   - Within sight of the garage door.
   - Out of reach of small children at a minimum height of 5 feet (1.5 m) above floors, landings, steps or any other adjacent walking surface.
   - Away from ALL moving parts of the door.
10. Place entrapment warning label on wall next to garage door control in a prominent location.
11. Place emergency release/safety reverse test label in plain view on inside of garage door.
12. Upon completion of installation, test safety reversal system. Door MUST reverse on contact with a 1-1/2" (3.8 cm) high object (or a 2x4 laid flat) on the floor.
13. DO NOT install on a one-piece door if using devices or features providing unattended close. Unattended devices and features are to be used ONLY with sectional doors.

14. SAVE THESE INSTRUCTIONS.

STEP 1. Determine the Header Bracket Location

⚠ WARNING

To prevent possible SERIOUS INJURY or DEATH:

- Header bracket MUST be RIGIDLY fastened to structural support on header wall or ceiling, otherwise garage door might NOT reverse when required. DO NOT install header bracket over drywall.
- Concrete anchors MUST be used if mounting header bracket or 2x4 into masonry.
- NEVER try to loosen, move or adjust garage door, springs, cables, pulleys, brackets, or their hardware, ALL of which are under EXTREME tension.
- ALWAYS call a trained door systems technician if garage door binds, sticks, or is out of balance. An unbalanced garage door might NOT reverse when required.

Installation procedures vary according to garage door types. Follow the instructions which apply to your door.

1. Close the door and mark the inside vertical centerline of the garage door.
2. Extend the line onto the header wall above the door. You can fasten the header bracket within 4 feet (1.22 m) of the left or right of the door center only if a torsion spring or center bearing plate is in the way; or you can attach it to the ceiling (see page 15) when clearance is minimal. It may be mounted on the wall upside down, if necessary, to gain approximately 1/2"(1 cm). If you need to install the header bracket on a 2x4 (on wall or ceiling), use lag screws (not provided) to securely fasten the 2x4 to structural supports as shown here and on page 15.
3. Open your door to the highest point of travel as shown. Draw an intersecting horizontal line on the header wall 2" (5 cm) above the highpoint:
   - i 2" (5 cm) above the high point for sectional door and one-piece door with track.
   - i 8" (20 cm) above the high point for one-piece door without track.

This height will provide travel clearance for the top edge of the door.

NOTE: *If the total number of inches exceeds the height available in your garage, use the maximum height possible, or refer to page 15 for ceiling installation.*

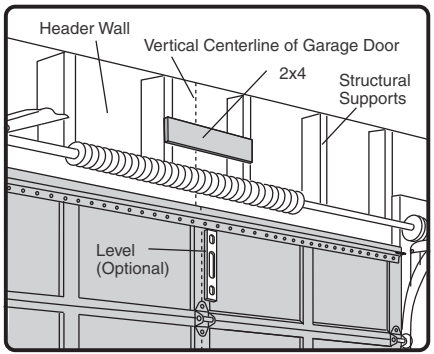

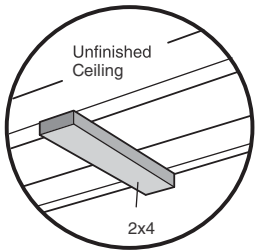

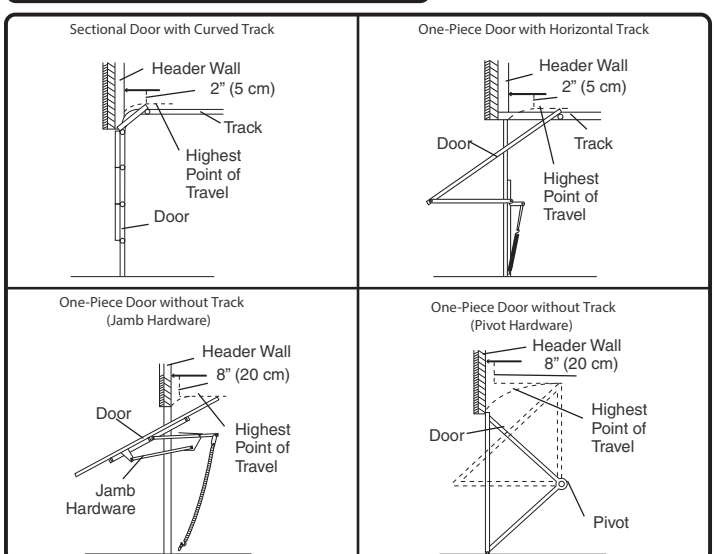

STEP 2. Install the Header Bracket

You can attach the header bracket either to the wall above the garage door, or to the ceiling. Follow the instructions which will work best for your particular requirements. Do not install the header bracket over drywall. If installing into masonry, use concrete anchors (not provided).

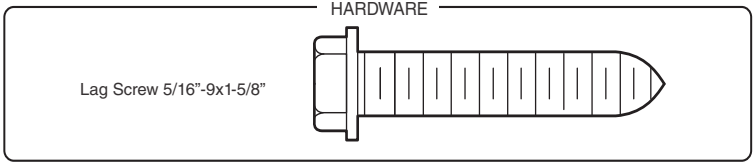

OPTION A - WALL INSTALLATION

1. Center the bracket on the vertical center line with the bottom edge of the bracket on the horizontal line as shown (with the arrow pointing toward the ceiling).
2. Mark the vertical set of bracket holes. Drill 3/16" pilot holes and fasten the bracket securely to a structural support with the hardware provided.

OPTION B - CEILING INSTALLATION

1. Extend the vertical centerline onto the ceiling as shown.
2. Center the bracket on the vertical mark, no more than 6" (15 cm) from the wall. Make sure the arrow is pointing away from the wall. The bracket can be mounted flush against the ceiling when clearance is minimal.
3. Mark the side holes. Drill 3/16" pilot holes and fasten bracket securely to a structural support with the hardware provided.

WALL INSTALLATION

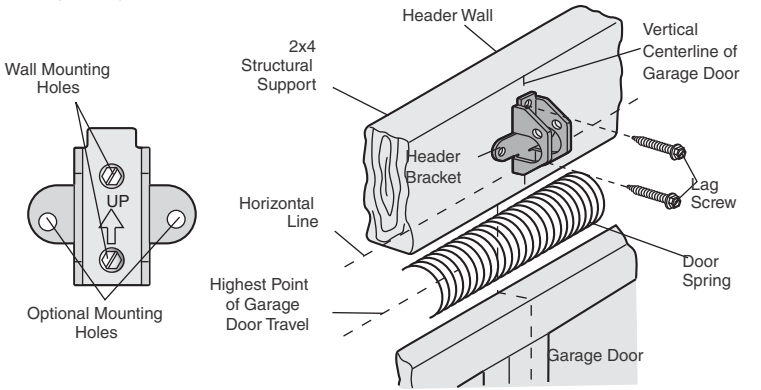

CEILING INSTALLATION

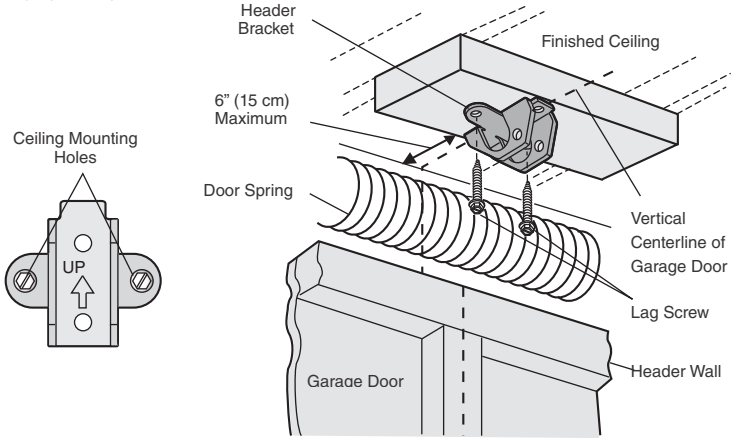

STEP 3. Attach the Rail to the Header Bracket

1. Position the opener on the garage floor below the header bracket. Use packing material as a protective base.
   NOTE: *If the door spring is in the way, you will need help. Have someone hold the opener securely on a temporary support to allow the rail to clear the spring.*
2. Position the rail bracket against the header bracket.
3. Align the bracket holes and join with a clevis pin as shown.
4. Insert a ring fastener to secure.

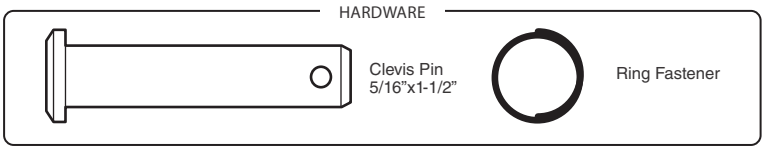

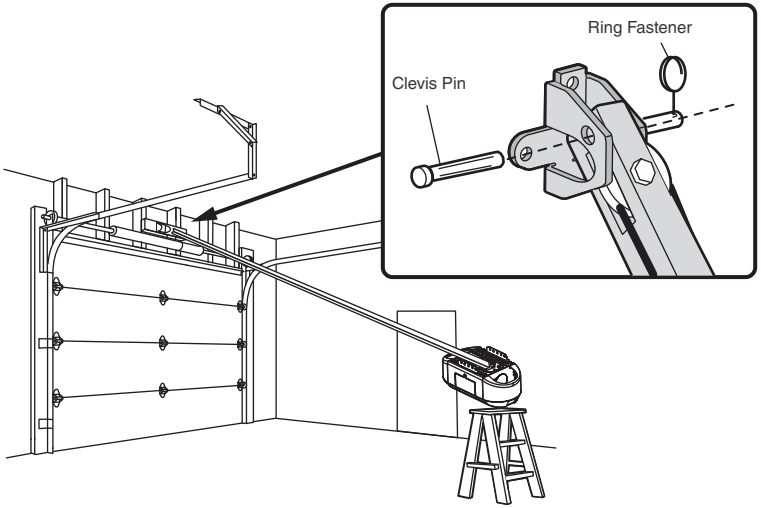

STEP 4. Position the Garage Door Opener

CAUTION

To prevent damage to garage door, rest garage door opener rail on 2x4 placed on top section of door.

1. Remove the packing material and lift the garage door opener onto a ladder.
2. Fully open the door and place a 2x4 (laid flat) under the rail. For one-piece doors without tracks, lay the 2x4 on its side.

NOTE: *A 2x4 is ideal for setting the distance between the rail and the door. If the ladder is not tall enough, you will need help at this point. If the door hits the trolley when it is raised, pull the trolley release arm down to disconnect the inner and outer trolley. Slide the outer trolley toward the garage door opener. The trolley can remain disconnected until instructed.*

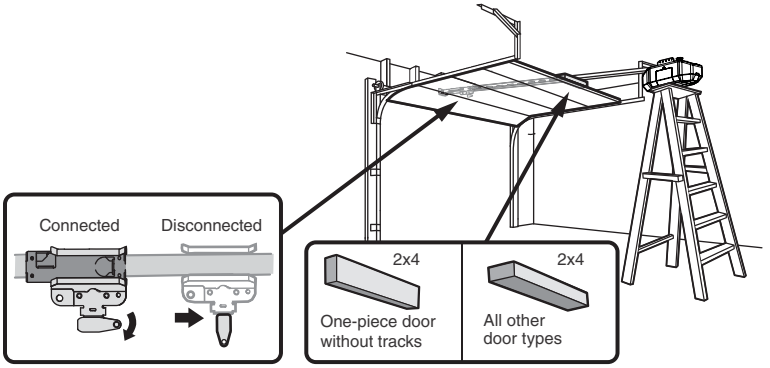

STEP 5. Hang the Garage Door Opener

⚠ WARNING

To avoid possible SERIOUS INJURY from a falling garage door opener, fasten it SECURELY to structural supports of the garage. Concrete anchors MUST be used if installing ANY brackets into masonry.

Support Brackets may already be installed on your garage ceiling. If you would like to re-use the existing support and hanging brackets, PLEASE NOTE you will have to move each hanging bracket accordingly in alignment to the width of your new garage door opener.

Hanging the garage door opener will vary depending on your garage. Below are three example installations. Your installation may be different. For ALL installations, the garage door opener MUST be connected to structural supports. The instructions illustrate one of the examples to the right.

1. On finished ceilings, use the lag screws to attach a support bracket (not provided) to the structural supports before installing the garage door opener.
2. Make sure the garage door opener is aligned with the header bracket. Measure the distance from each side of the garage door opener to the support bracket.
3. Cut both pieces of the hanging bracket (not provided) to required lengths.
4. Attach the end of each hanging bracket to the support bracket with appropriate hardware (not provided).
5. Attach the garage door opener to the hanging brackets with the hex bolts, lock washers, and nuts.
6. Remove the 2x4 and manually close the door. If the door hits the rail, raise the header bracket.

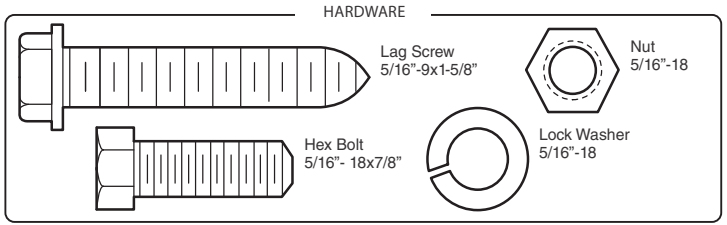

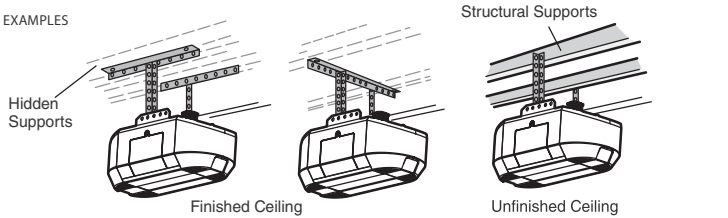

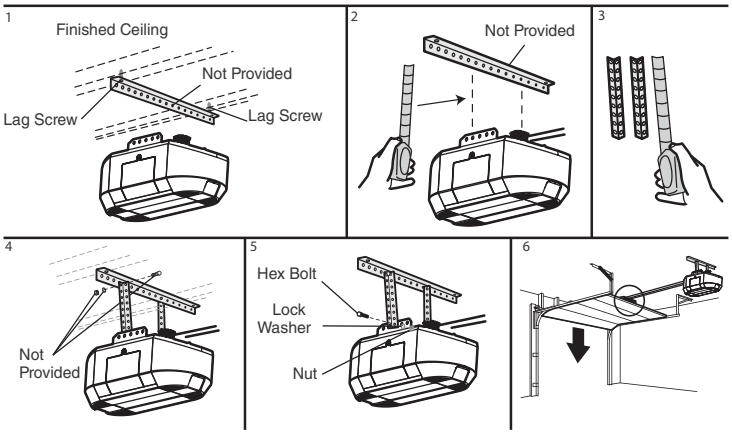

STEP 6. Install the Light Bulbs

⚠ CAUTION

To prevent possible OVER HEATING of the end panel or light socket:

- DO NOT use incandescent light bulbs
- DO NOT use compact fluorescent light bulbs
- DO NOT use halogen bulbs
- DO NOT use short neck or specialty light bulbs.

LED bulbs may cause remote control radio interference. Use ONLY: A19 60 Watt Equivalent LED light bulbs

1. Pull light lens straight out.
2. Insert light bulb.
3. Snap lens back on by pushing straight in.

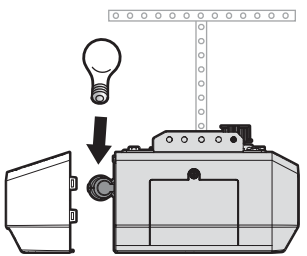

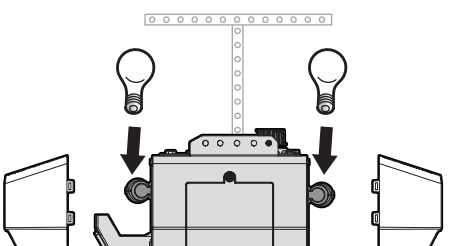

STEP 7. Attach the Emergency Release Rope and Handle

⚠ WARNING

To prevent possible SERIOUS INJURY or DEATH from a falling garage door:

- If possible, use emergency release handle to disengage trolley ONLY when garage door is CLOSED. Weak or broken springs or unbalanced door could result in an open door falling rapidly and/or unexpectedly.
- NEVER use emergency release handle unless garage doorway is clear of persons and obstructions.
- NEVER use handle to pull door open or closed. If rope knot becomes untied, you could fall.

1. Insert one end of the emergency release rope through the handle. Make sure that "NOTICE" is right side up. Secure with an overhand knot at least 1" (2.5 cm) from the end of the rope to prevent slipping.
2. Insert the other end of the emergency release rope through the hole in the trolley release arm. Mount the emergency release within reach, but at least 6 feet (1.83 m) above floor, avoiding contact with vehicles to prevent accidental release, and secure with an overhand knot.

NOTE: *If it is necessary to cut the emergency release rope, seal the cut end with a match or lighter to prevent unraveling. Ensure the emergency release rope and handle are above the top of all vehicles to avoid entanglement.*

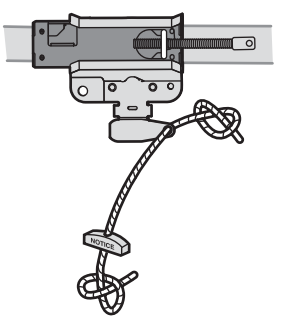

STEP 8. Install the Door Bracket

⚠ CAUTION

Fiberglass, aluminum, or light weight steel garage doors WILL REQUIRE reinforcement BEFORE installation of door bracket. Contact the garage door manufacturer or installing dealer for opener reinforcement instructions or reinforcement kit. Failure to reinforce the top section as required according to the door manufacturer may void the door warranty.

A horizontal and vertical reinforcement is needed for light weight garage doors (fiber glass, aluminum, steel, doors with glass panel, etc.) (not provided). A horizontal reinforcement brace should be long enough to be secured to two or three vertical supports. A vertical reinforcement brace should cover the height of the top panel. Contact the garage door manufacturer or installing dealer for opener reinforcement instructions or reinforcement kit.

NOTE: *Many door reinforcement kits provide for direct attachment of the clevis pin and door arm. In this case, you will not need the door bracket; proceed to the next step.*

OPTION A - SECTIONAL DOORS

1. Center the door bracket on the previously marked vertical center line used for the header bracket installation. Note correct UP placement, as stamped inside bracket.
2. Position the top edge of the bracket 2"-4" (5-10 cm) below the top edge of the door, OR directly below any structural support across the top of the door.
3. Mark, drill holes, and install as follows, depending on your door's construction.

Metal or light weight doors using a vertical angle iron brace in the door panel support and the door bracket:

- Drill 3/16" fastening holes. Secure the door bracket using the two 1/4"-14x5/8" self-threading screws. (Figure 1)
- Alternately, use two 5/16"-18x2" bolts, lock washers and nuts (not provided). (Figure 2)

Metal, insulated, or light weight factory reinforced doors:

- Drill 3/16" fastening holes. Secure the door bracket using the self-threading screws. (Figure 3)

Wood doors:

- Use top and bottom or side to side door bracket holes. Drill 5/16" holes through the door and secure bracket with 5/16"-18x2" carriage bolts, lock washers, and nuts (not provided). (Figure 4)

NOTE: *The1/4"-14x5/8" self-threading screws are not intended for use on wood doors.*

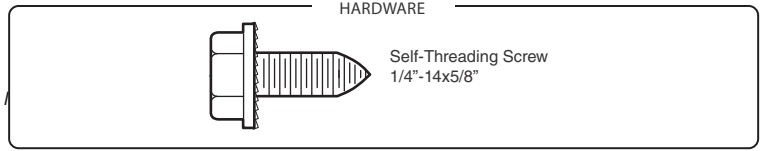

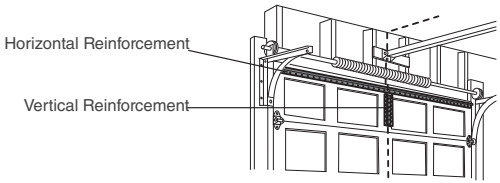

FIGURE 1

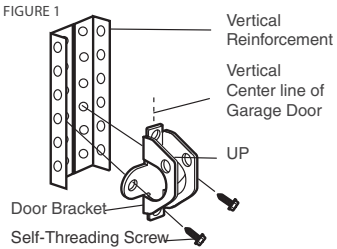

FIGURE 2

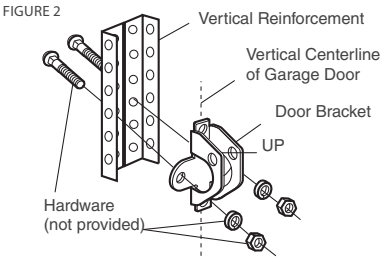

FIGURE 3

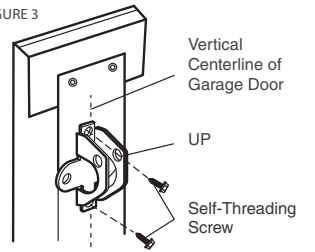

FIGURE 4

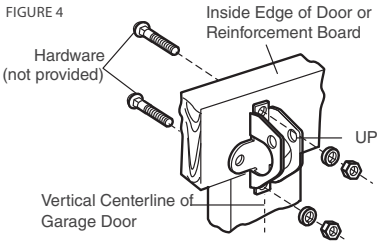

STEP 8. Install the Door Bracket (continued)

OPTION B - ONE-PIECE DOORS

1. Center the door bracket on the top of the door, in line with the header bracket as shown.
2. Mark either the left and right, or the top and bottom holes.

Metal Doors:

i Drill 3/16" pilot holes and fasten the bracket with the self-threading screws provided.

Wood Doors:

i Drill 5/16" holes and use 5/16"-18x2" carriage bolts, lock washers, and nuts (not provided) or 5/16"x1- 1/2" lag screws (not provided) depending on your installation needs.

NOTE: *The door bracket may be installed on the top edge of the door if required for your installation. (Refer to the dotted line optional placement drawing.)*

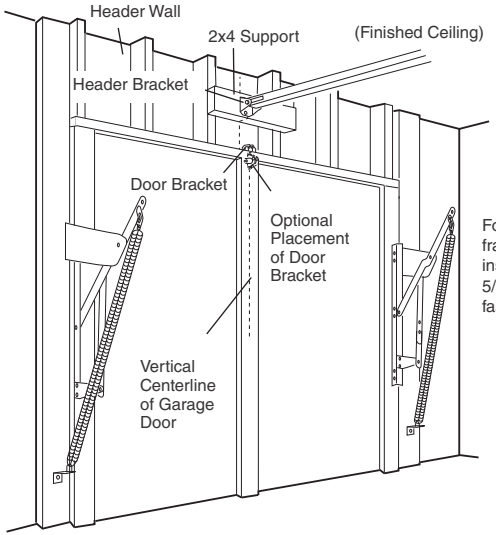

For a door with no exposed framing, or for the optional installation, use lag screws 5/16"x1-1/2" (not provided) to fasten the door bracket.

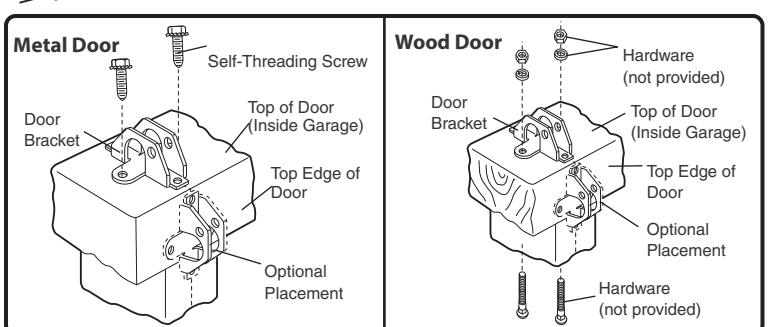

STEP 9. Connect the Door Arm to the Trolley

⚠ CAUTION

NOTE: Always follow the operator manufacturer's specifications for arm angle and configuration. Improper alignment may affect the performance or safety of the system.

Installation will vary according to the garage door type. Follow the instructions which apply to your door.

OPTION A - SECTIONAL DOORS

IMPORTANT: *The groove on the straight door arm MUST face away from the curved door arm.*

1. Close the door. Disconnect the trolley by pulling the emergency release handle.
2. Attach the straight door arm to the outer trolley using the clevis pin. Secure with the ring fastener.
3. Attach the curved door arm to the door bracket using the clevis pin. Secure with the ring fastener.
4. Bring arm sections together. Find two pairs of holes that line up and join sections. Select holes as far apart as possible to increase door arm rigidity and attach using the bolts, nuts, and lock washers.
5. Pull the emergency release handle toward the garage door opener until the trolley release arm is horizontal. The trolley will re-engage automatically when the garage door opener is activated.

NOTE: *If the holes in the curved door arm and the straight door arm do not align, reverse the straight door arm, select two holes (as far apart as possible), and attach using bolts, nuts, and lock washers. If the straight door arm is hanging down too far, you may cut off excess material as needed to align in better proportion with the curved door arm solid end.*

NOTE: *When the garage door is in the fully closed position, the curved arm connecting the operator to the door should be positioned so that the lower portion of the arm- extending from the door bracket- is as close to horizontal as possible. This alignment ensures optimal mechanical leverage and smooth operation of the drawbar operator.*

REINFORCING LIGHT WEIGHT SECTIONAL GARAGE DOORS

To ensure the safe and reliable operation of a garage door opener, it is critical to reinforce the top section of lightweight sectional garage doors in accordance with the manufacturer's specifications.

- This reinforcement strengthens the area where the operator arm connects to the door, enabling it to withstand the repeated forces applied during opening and closing cycles.
- Without proper reinforcement, the top section may flex, deform, or fail over time- compromising both the performance and safety of the entire system.

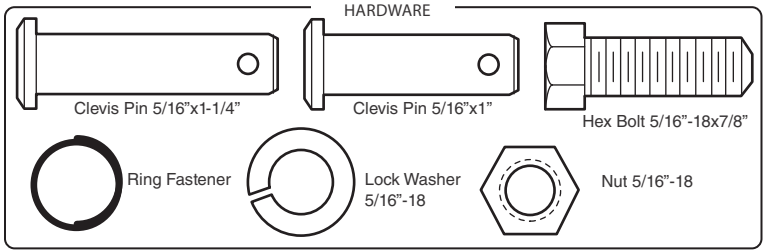

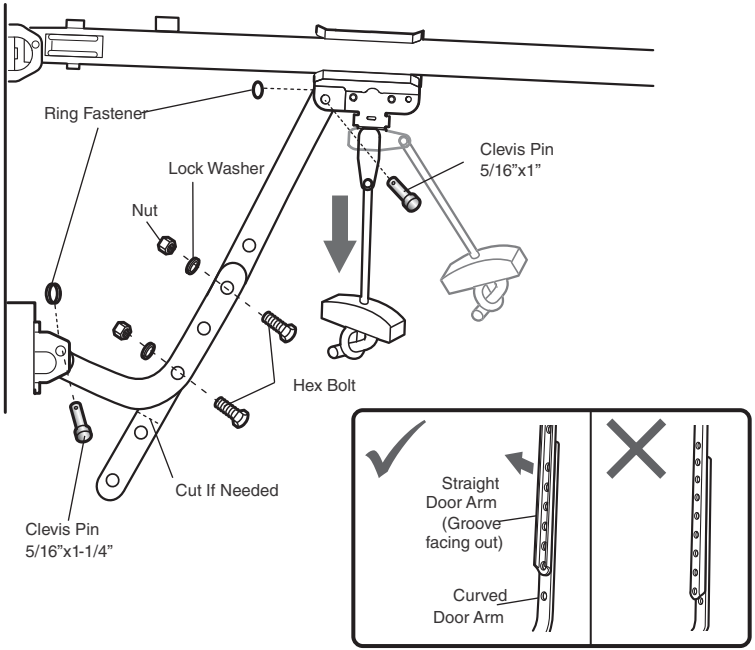

STEP 9. Connect the Door Arm to the Trolley (continued)
OPTION B - ONE-PIECE DOORS

IMPORTANT: *The groove on the straight door arm MUST face away from the curved door arm.*

1. Close the door. Disconnect the trolley by pulling the emergency release handle.
2. Fasten the straight door arm and the curved door arm together to the longest possible length (with a 2- or 3-hole overlap) using the bolts, nuts, and lock washers.
3. Attach the straight door arm to the door bracket using the clevis pin. Secure with the ring fastener.
4. Attach the curved door arm to the trolley using the clevis pin. Secure with the ring fastener.
5. Pull the emergency release handle toward the garage door opener until the trolley release arm is horizontal.

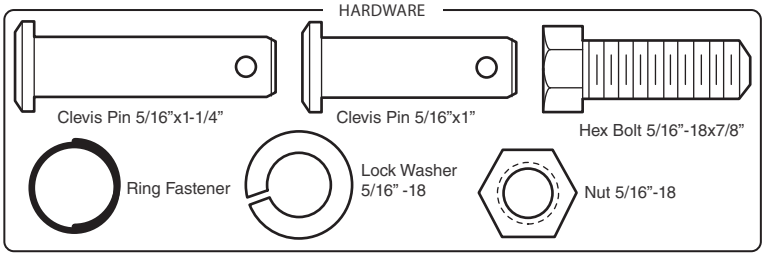

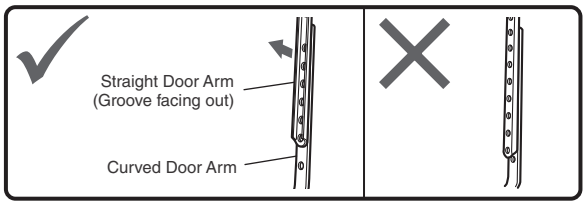

One-Piece Door without Track

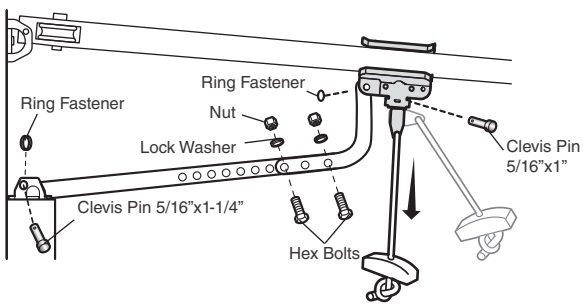

One-Piece Door with Track

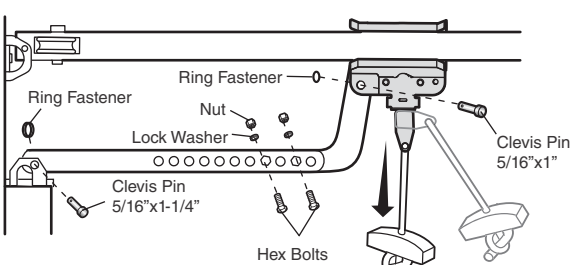

STEP 10. Install the Door Control

Push Button Door Control

⚠ WARNING

To prevent possible SERIOUS INJURY or DEATH from electrocution:

- Be sure power is NOT connected BEFORE installing door control.
- Connect door control ONLY to 12 VOLT low voltage wires.

To prevent possible SERIOUS INJURY or DEATH from a closing garage door:

- Install door control within sight of garage door, out of reach of small children at a minimum height of 5 feet (1.5 m) above floors, landings, steps or any other adjacent walking surface, and away from ALL moving parts of door.
- NEVER permit children to operate or play with door control push buttons or remote control transmitters.
- Activate door ONLY when it can be seen clearly, is properly adjusted, and there are no obstructions to door travel.
- ALWAYS keep garage door in sight until completely closed. NEVER permit anyone to cross path of closing garage door.

Introduction

Install the door control within sight of the door at a minimum height of 5 feet (1.5 m) above floors, landings, steps or any other adjacent walking surface, where small children cannot reach, and away from the moving parts of the door.

NOTE: *Your product may look different than the illustrations.*

HARDWARE

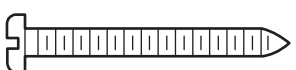

Screw 6ABx1-1/2" (2)

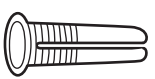

Drywall Anchors (2)

1. Unplug the garage door opener to prevent the garage door opener from activating during wiring. Disconnect the garage door opener battery (if applicable).
2. At the push button door control, separate the wires and strip 1/4 inch (6 mm) of insulation from the end of each wire.
3. Connect one wire to each of the two screws on the back of the door control. The wires can be connected to either screw.
4. Mark the location of the two screw holes on the wall. Drill two 5/32 inch (4mm) holes.
5. Tap in anchors with hammer if installing on drywall. Install the two screws.

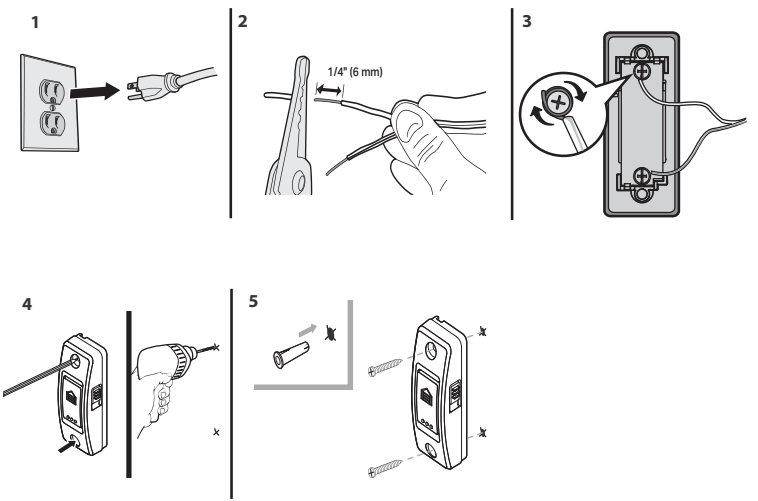

STEP 10. Install the Door Control (continued)

Motion Detecting and Multi-Function Control Panel

WARNING

To prevent possible SERIOUS INJURY or DEATH from electrocution:

- Be sure power is NOT connected BEFORE installing door control.
- Connect door control ONLY to 12 VOLT low voltage wires.

To prevent possible SERIOUS INJURY or DEATH from a closing garage door:

- Install door control within sight of garage door, out of reach of small children at a minimum height of 5 feet (1.5 m) above floors, landings, steps or any other adjacent walking surface, and away from ALL moving parts of door.
- NEVER permit children to operate or play with door control push buttons or remote control transmitters.
- Activate door ONLY when it can be seen clearly, is properly adjusted, and there are no obstructions to door travel.
- ALWAYS keep garage door in sight until completely closed. NEVER permit anyone to cross path of closing garage door.

INTRODUCTION

Install the door control within sight of the door at a minimum height of 5 feet (1.5 m) above floors, landings, steps or any other adjacent walking surface, where small children cannot reach, and away from the moving parts of the door.

NOTE: *Your product may look different than the illustrations.*

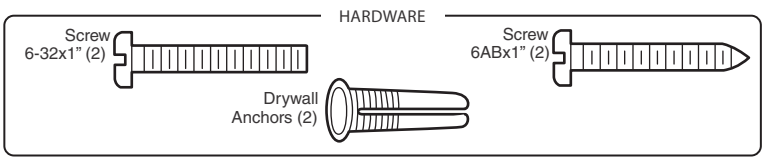

1. Unplug the garage door opener to prevent the garage door opener from activating during wiring. Disconnect the garage door opener battery (if applicable).
2. Separate the wires and strip 7/16 inch (11 mm) of insulation from the end of each wire.
3. Connect one wire to each of the two screws on the back of the door control. The wires can be connected to either screw.
4. Mark the location of the bottom mounting hole and drill a 5/32 inch (4 mm) hole.
5. Tap in anchor with hammer if installing on drywall. Install the bottom screw, allowing 1/8 inch (3 mm) to protrude from the wall.
6. Position the bottom hole of the control panel over the screw (a) and slide down into place (b).
7. Lift up the control panel push bar and mark the top hole.
8. Remove the control panel from the wall and drill a 5/32 inch (4 mm) hole for the top screw. Tap in anchor with hammer if installing on drywall.
9. Position the bottom hole of the control panel over the screw and slide down into place. Install the top screw and close the push bar.

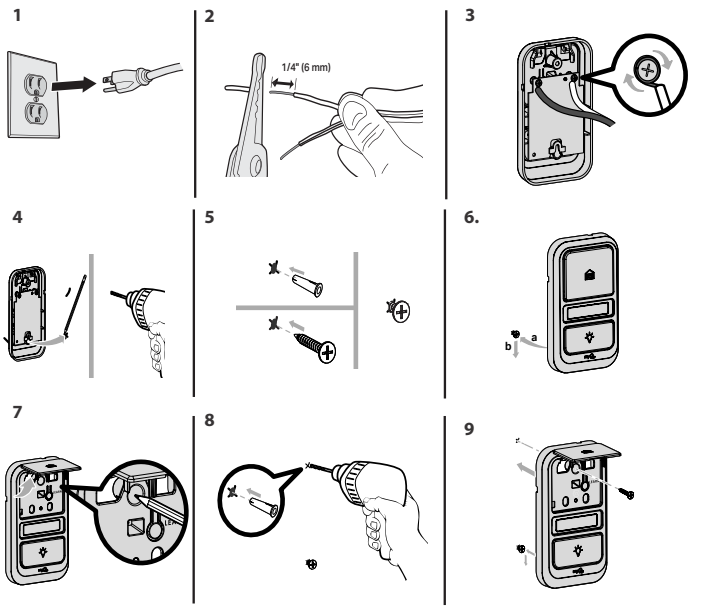

STEP 11. Wire the Door Control to the Garage Door Opener

1. Separate the wires and strip 7/16 inch (11 mm) of insulation from the end of each wire.
2. Connect one of the wires to the red terminal and the other wire to the white terminal. To insert or release wire, push in tab with screwdriver tip.

HARDWARE

Insulated Staple (Not Shown)

1

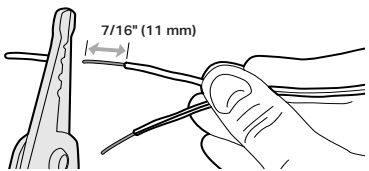

2

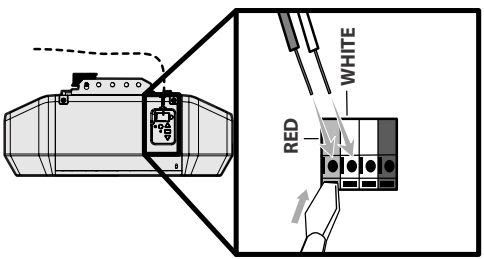

Step 12. Attach the Warning Labels

1. Attach the entrapment warning label on the wall near the door control with tacks or staples.
2. Attach the manual release/safety reverse test label in a visible location on the inside of the garage door.

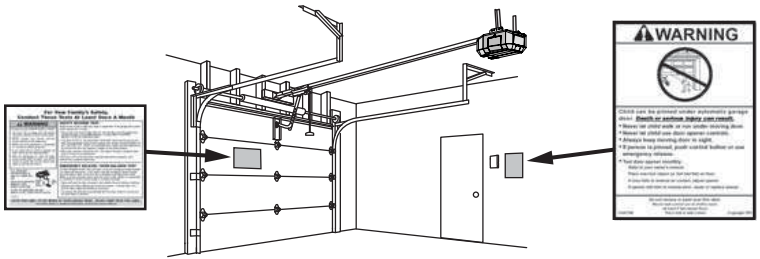

STEP 13. Install the Protector System®

⚠ WARNING

Be sure power is NOT connected to the garage door opener BEFORE installing the safety reversing sensor.
To prevent SERIOUS INJURY or DEATH from closing garage door:

- Correctly connect and align the safety reversing sensor. This required safety device MUST NOT be disabled.
- Install the safety reversing sensor so beam is NO HIGHER than 6" (15 cm) above garage floor.

IMPORTANT: *The safety reversing sensors MUST be connected and aligned correctly before the garage door opener will move in the down direction.*

The Protector System® includes two safety reversing sensors which use a light beam to prevent the garage door from closing. The sending sensor (amber LED) transmits the beam to the receiving sensor (green LED) when both are powered and aligned. The receiving sensor has a sticker on the back. If an obstruction breaks the light beam while the door is closing, the door will stop, and reverse to the fully open position.

When installing the safety reversing sensors, check:

- Sensors are installed INSIDE the garage.
- Sensor lenses are facing each other.
  IMPORTANT: Do not allow direct sunlight to the receiving sensor (green LED).
- Sensor beam is NO HIGHER than 6" (15 cm) above the floor and the light beam is unobstructed.

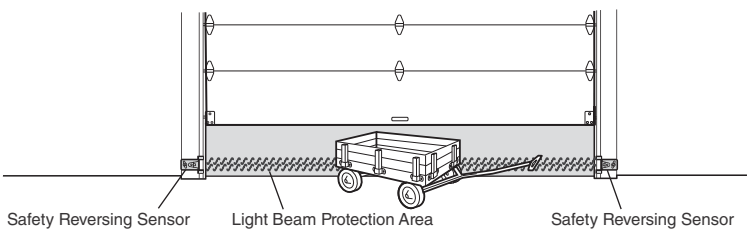

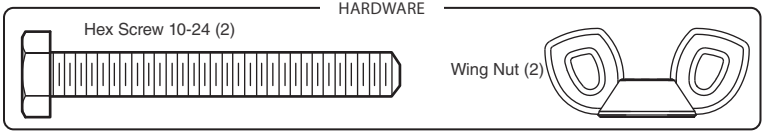

The safety reversing sensors are designed to clip onto the door track with the provided sensor brackets. If the door track will not support the sensor bracket, a wall installation is recommended. The sensor beam should be NO HIGHER than 6" (15 cm) above the floor.

DOOR TRACK INSTALLATION

1. Slide the curved arms of the sensor bracket around the edge of the door track. Snap into place so that the sensor bracket is flush against the track.
2. Slide the hex screw through the sensor.
3. Attach the sensor to the bracket with the wing nut. Make sure the lens is not obstructed by the bracket.

Repeat the steps with the other sensor on the opposite door track. Both lenses must face each other.

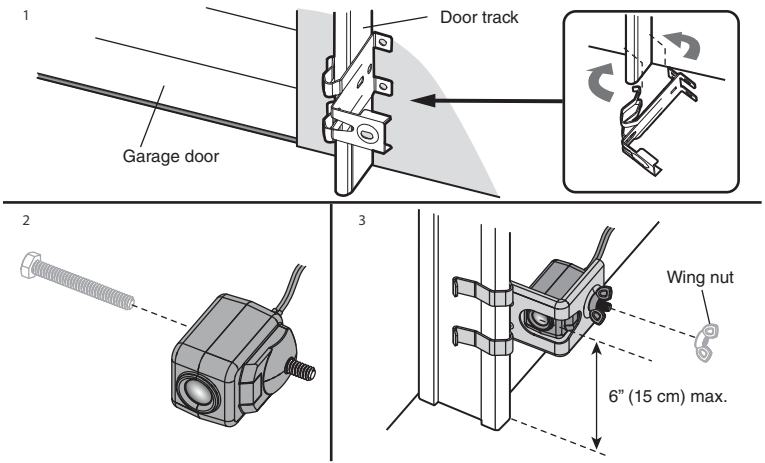

STEP 13. Install the Protector System® (continued)

Wall Option

Make sure the brackets on each side are clear of the door track and have the same amount of clearance so the sensors will align correctly. If additional clearance is needed, use extension brackets 041A5281-1 (not provided) or wood blocks.

1. Attach the sensor bracket against the wall with two lag screws (not provided).
2. Slide the hex screw through the sensor.
3. Attach the sensor to the bracket with the wing nut. Make sure the lens is not obstructed by the bracket.

Repeat the steps with the other sensor on the opposite side of the garage door. Both lenses must face each other.

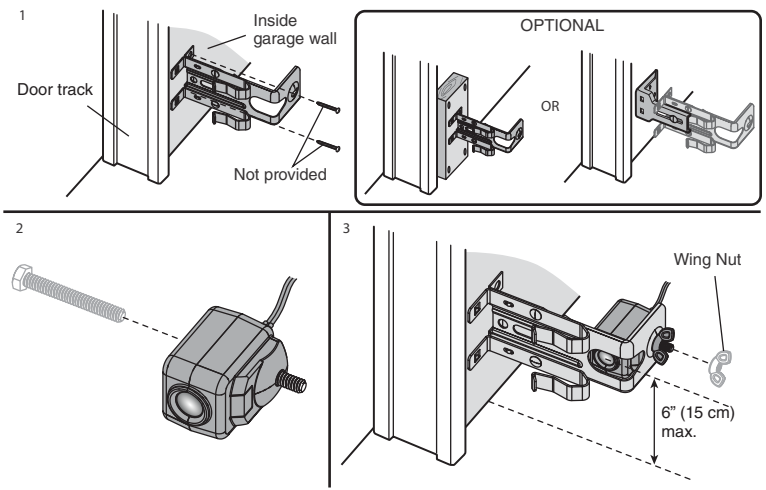

Floor Option

1. Measure the position of both sensor brackets so they will be the same distance from the wall and unobstructed.
2. Attach the bracket to the floor with concrete anchors (not provided).
3. Slide the hex screw through the sensor.
4. Attach the sensor to the bracket with the wing nut. Make sure the lens is not obstructed by the bracket.

Repeat the steps with the other sensor on the opposite side of the garage door. Both lenses must face each other.

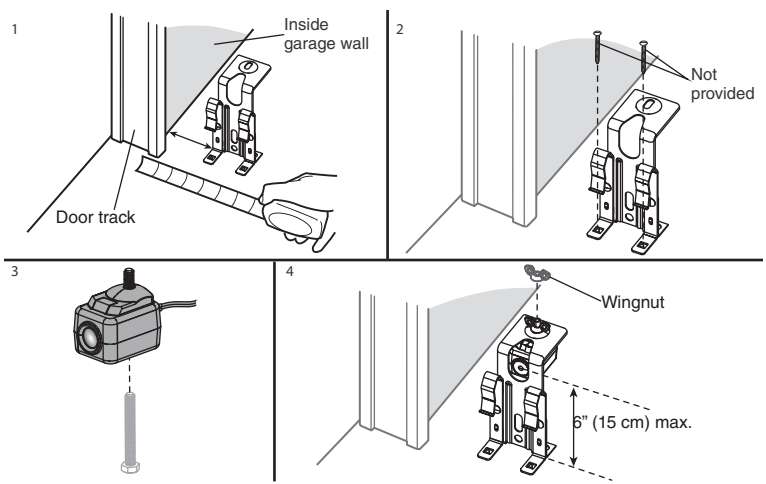

STEP 14. Wire the Safety Reversing Sensors

If your garage has pre-installed wiring for the safety reversing sensors, see OPTION B - PRE-WIRED INSTALLATION page 28.

OPTION A - INSTALLATION WITH NO PRE-WIRING

1. Run the wire from both sensors to the garage door opener. Attach with staples, but DO NOT puncture the wire.
2. Separate the sensor wires and strip insulation from each end. Twist the two white wires together. Then twist the two white/black wires together.
3. Using a screwdriver, push in the terminal tabs, and insert the white wires into the white terminal. Insert the white/black wires into the grey terminal.

HARDWARE

Insulated Staple (Not Shown)

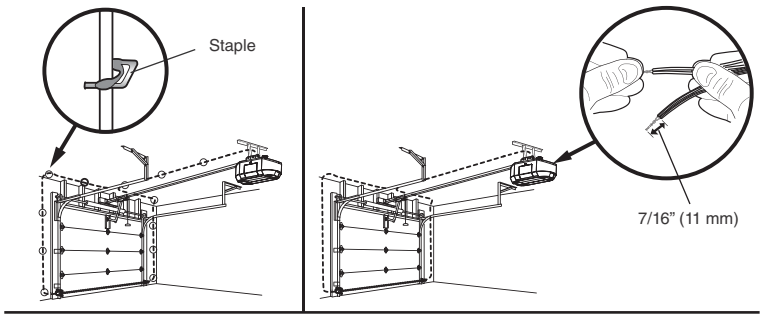

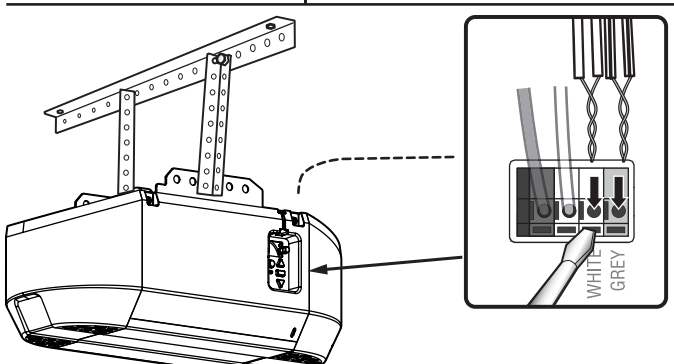

STEP 14. Wire the Safety Reversing Sensors (continued)

OPTION B - PRE-WIRED INSTALLATION

1. Cut the sensor wires, making sure there is enough wire to reach the pre-installed wires from the wall.
2. Separate the sensor wires and strip insulation from each end. Choose two of the pre-installed wires and strip insulation from each end. Choose the same color pre-installed wires for each sensor.
3. Connect the pre-installed wires to the sensor wires with wire nuts making sure the colors correspond for each sensor.
4. At the garage door opener, strip the end of the wires previously connected to the sensors. Twist the like-colored wires together.
5. Using a screwdriver, push in the terminal tabs, and insert the wire color connected to the sensor's white wire into the white terminal. Insert the other wire color connected to the sensor's white/black wire into the grey terminal.

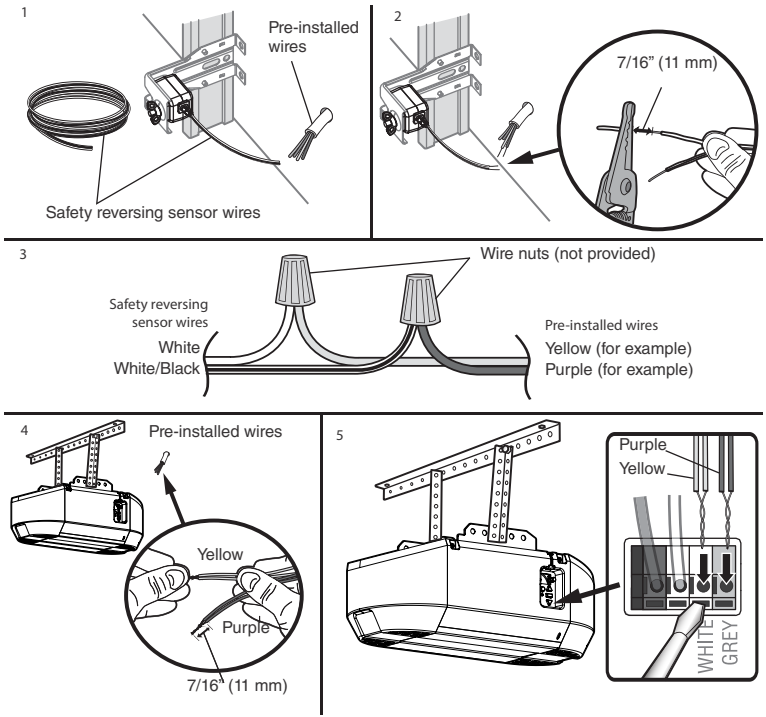

STEP 15. Connect Power

⚠ WARNING

To prevent possible SERIOUS INJURY or DEATH from electrocution or fire:

- Be sure power is NOT connected to the opener, and disconnect power to circuit BEFORE removing cover to establish permanent wiring connection.
- Garage door installation and wiring MUST be in compliance with ALL local electrical and building codes.
- NEVER use an extension cord, 2-wire adapter, or change plug in ANY way to make it fit outlet. Be sure the opener is grounded.

To avoid installation difficulties, do not run the opener at this time.

To reduce the risk of electric shock, your garage door opener has a grounding type plug with a third grounding pin. This plug will only fit into a grounding type outlet. If the plug doesn't fit into the outlet you have, contact a qualified electrician to install the proper outlet.

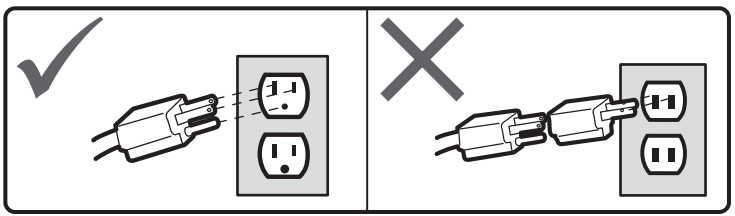

THERE ARE TWO OPTIONS FOR CONNECTING POWER:

OPTION A - TYPICAL WIRING

1. Plug in the garage door opener into a grounded outlet.
2. DO NOT run garage door opener at this time.

OPTION B - PERMANENT WIRING

If permanent wiring is required by your local code, refer to the following procedure. To make a permanent connection through the 7/8 inch hole in the top of the motor unit (according to local code):

1. Be sure power is NOT connected to the opener, and disconnect power to the circuit.
2. Remove the motor unit cover screws and set the cover aside.
3. Cut the power cord 6 inches (15.2 cm) from the top of the garage door opener.
4. Remove the strain relief.
5. Pull the power cord wires back into the garage door opener.
6. Install conduit or flex cable adapter in the 7/8 inch hole.
7. Run the permanent wires through the conduit in the 7/8 inch hole. Strip the insulation from the ends of all wires.
8. Connect the black (line) wire to the existing black wire; the white (neutral) wire to the existing white wire; and the ground wire to the existing green ground wire with wire nuts. The opener must be grounded.
9. Properly secure the wires with plastic ties so that the wires do not come in contact with moving parts.

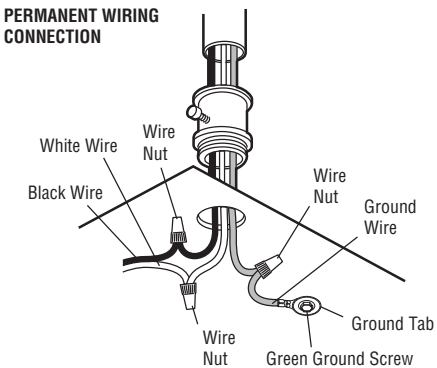

STEP 16. Align the Safety Reversing Sensors

IMPORTANT: *The safety reversing sensors MUST be connected and aligned correctly before the garage door opener will move in the down direction.*

When the garage door opener has power, check the safety reversing sensors. If the sensors are aligned and wired correctly, both LEDs will glow steadily.

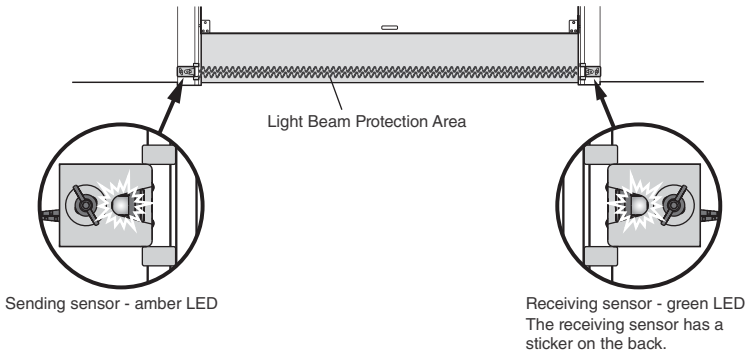

To align the safety reversing sensors:

1. Loosen the wing nuts.
2. Adjust the sensors up or down until both LEDs glow steady indicating alignment.
3. Tighten the wing nut to secure the sensor.

TIP: After tightening the wingnut, lightly wiggle the sensor brackets by hand without blocking the beam to ensure both LEDs remain glowing steady. If the receiving eye flashes while wiggling the brackets, adjust the sensor alignment until a solid LED glow is reached before proceeding.

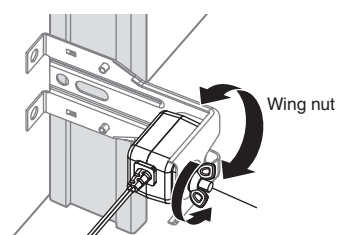

SAFETY SENSOR TROUBLESHOOTING

If either of the sensor LEDs are off, there is no power to the sensor:

1. Check that you have power to the garage door opener.
2. Check the sensor wire is not shorted or broken.
3. Check that the sensors are wired correctly; white wires to white terminal and white/black wires to grey terminal.

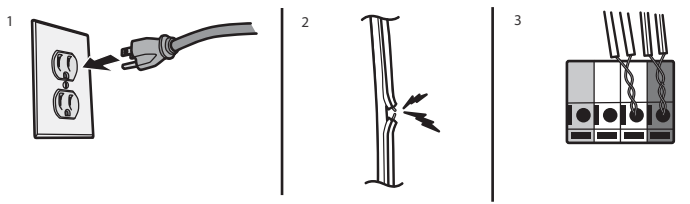

If the green receiving sensor LED is blinking, the sensors are obstructed or misaligned:

1. Check for obstructions in the sensor light beam.
2. Align the sensors.
3. If the receiving sensor (green LED) faces direct sunlight, switch the receiving sensor with the sending sensor and repeat STEP 14 Install the Protector System® page 25 to assure proper operation.

STEP 17. Ensure the Door Control is Wired Correctly

If the door control has been installed and wired correctly, the command LED on the control panel will glow solid.

THE FOLLOWING STEPS ARE NEEDED TO COMPLETE INSTALLATION

- Introduction : Page 31
- Program the Travel: Page 32
- Automatic Force Set Up: Page 32
- Test the Safety Reversal System: Page 33

Adjustments

Introduction

⚠ WARNING

Without a properly installed safety reversal system, persons (particularly small children) could be SERIOUSLY INJURED or KILLED by a closing garage door.

- Incorrect adjustment of garage door travel limits will interfere with proper operation of safety reversal system.
- After ANY adjustments are made, the safety reversal system MUST be tested. Door MUST reverse on contact with 1-1/2" (3.8 cm) high object (or 2x4 laid flat) on floor.

⚠ CAUTION

To prevent damage to vehicles, be sure fully open door provides adequate clearance.

Your garage door opener is designed with electronic controls to make setup and adjustments easy.

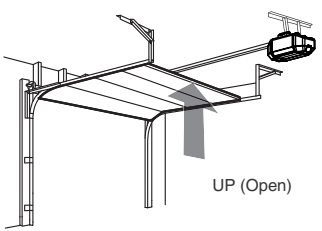

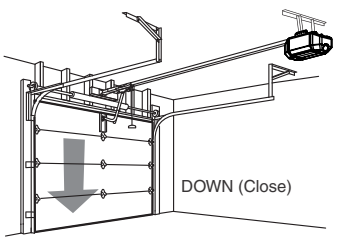

ONE-PIECE DOORS ONLY

When setting the UP travel for a one-piece door ensure that the door does not slant backwards when fully open (UP). If the door is slanted backwards, this will cause unnecessary bucking and/or jerking when the door is opening or closing.

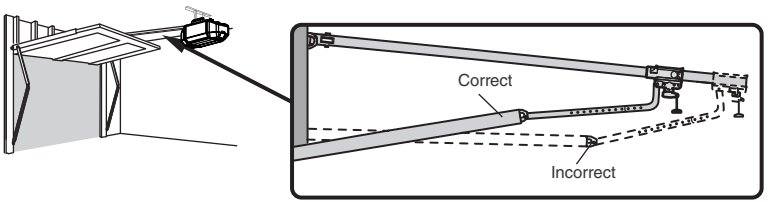

PROGRAMMING BUTTONS

The programming buttons are located on the left side panel of the garage door opener and are used to program the travel. While programming, the UP and DOWN buttons can be used to move the door as needed.

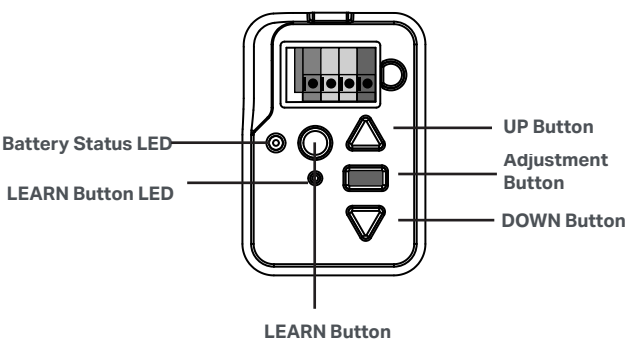

Adjustments

STEP 1. Program the Travel

⚠ WARNING

Without a properly installed safety reversal system, persons (particularly small children) could be SERIOUSLY INJURED or KILLED by a closing garage door.

- Incorrect adjustment of garage door travel limits will interfere with proper operation of safety reversal system.
- After ANY adjustments are made, the safety reversal system MUST be tested. Door MUST reverse on contact with 1-1/2" (3.8 cm) high object (or 2x4 laid flat) on floor.

While programming the travel, the UP and DOWN buttons can be used to move the door as needed. The Safety Reversing Sensors will be disconnected during the Program the Travel process. During the Automatic Force Setup, the door will automatically open and close.

1 Press and hold the Adjustment Button until the UP Button begins to flash and/or a beep is heard.

The Safety Reversing Sensors will be disconnected during the Program the Travel process.

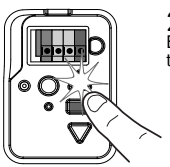

2 Press and hold the UP Button until the door is in the desired UP position.

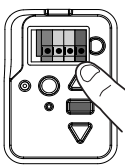

3 Once the door is in the desired UP position, press and release the Adjustment Button. The garage door opener lights will flash twice, and the DOWN Button will begin to flash.

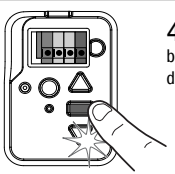

4 Press and hold the DOWN button until the door is in the desired DOWN position.

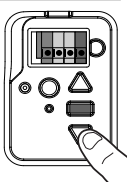

5 Once the door is in the desired DOWN position, press and release the Adjustment Button. The garage door opener lights will flash twice. Program the Travel is now complete, and the opener will automatically set the openers force settings.

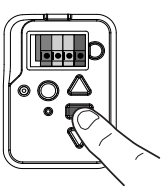

STEP 2. Automatic Force Set Up

Once both the up and down positions have been manually set, the Safety Reversing Sensors will reconnect and become operational. Then, the opener will enter a force-sensing operation by automatically moving the door open and close. The garage door opener will sound an audible and visual alert before automatically opening and closing the door. The garage door opener will beep three times, confirming that the Automatic Force Setup completed successfully. Adjustment is complete.

If you hear one long beep after the door attempts to move, then the Automatic Force Set Up has not completed successfully. Please start over at step 1 of Program the Travel.

If the garage door opener lights flash 5 times, then programming has timed out and the Travel Limits have not been set. Please restart the Program the Travel process.

*If the garage door opener lights are flashing 5 times during the steps for Program the Travel, the programming has timed out. If the garage door opener lights are flashing 10 times during the steps for Program the Travel, the safety reversing sensors are misaligned or obstructed. When the sensors are aligned and unobstructed, cycle the door through a complete up and down cycle using the remote control or the UP and DOWN buttons. Programming is complete. If you are unable to operate the door up and down, repeat the steps for Programming the Travel.

STEP 3. Test the Safety Reversal System

⚠ WARNING

Without a properly installed safety reversal system, persons (particularly small children) could be SERIOUSLY INJURED or KILLED by a closing garage door.

- Safety reversal system MUST be tested every month.
- After ANY adjustments are made, the safety reversal system MUST be tested. Door MUST reverse on contact with 1-1/2" (3.8 cm) high object (or 2x4 laid flat) on the floor.

1 With the door fully open, place a 1-1/2 inch (3.8 cm) board (or a 2x4 laid flat) on the floor, centered under the garage door.

2 Press the remote control push button to close the door. The door MUST reverse when it makes contact with the board.

If the door stops but does not reverse:

1. Repeat programming the travel by setting the closed limit tighter to the floor.
   NOTE: *Applying slightly more pressure to the door seal may allow the safety reversal systems to be set properly.*
2. Repeat the Safety Reversal Test.

If the test continues to fail, call a trained door technician.

NOTE: It is normal for the trolley to slightly lift the rail with a properly set close limit. Ensuring the door is fully closed will provide the best opportunity for a successful Safety Reversal System test.

STEP 4. Test the Protector System

⚠ WARNING

Without a properly installed safety reversing sensor, persons (particularly small children) could be SERIOUSLY INJURED or KILLED by a closing garage door.

1 Open the door. Place an obstruction in the path of the door.

2 Press the remote control push button to close the door. The door will not move more than an inch (2.5 cm).

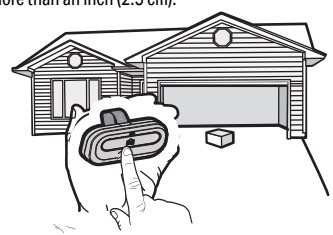

The garage door opener will not close from a remote control if the receiving LED is flashing green (alerting you to the fact that the sensor is misaligned or obstructed.

Battery Backup

Install the Battery

MODEL B3000, B3010, B4210, B4310, B5330

⚠ WARNING

To reduce the risk of FIRE or INJURY to persons:

- Disconnect ALL electric and battery power BEFORE performing ANY service or maintenance.
- Use ONLY Chamberlain part # 4228 for replacement battery.
- DO NOT dispose of battery in fire. Battery may explode. Check with local codes for disposal instructions.

⚠ CAUTION

ALWAYS wear protective gloves and eye protection when changing the battery or working around the battery compartment.

The 12V battery backup allows access in and out of your garage, even when the power is out. The battery does not have to be fully charged to operate the garage door opener. When the garage door opener is operating on battery power, it may run slower, and the following features are disabled:

- Garage door opener lights
- myQ® App control and monitoring
- Unattended close including Timer-to-Close

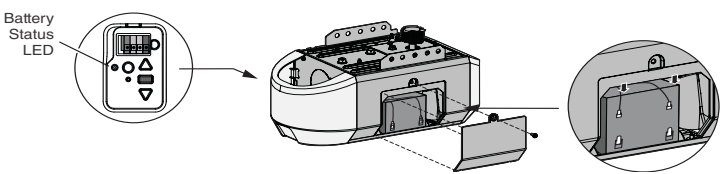

1. Unplug the garage door opener.
2. Use a Phillips head screwdriver to remove the side panel on the garage door opener.
3. Partially insert the battery into the battery compartment with the terminals facing out.
4. Connect red (+) and black (-) wires from the garage door opener to the corresponding terminals on the battery.
5. Replace the battery cover.
6. Plug in the garage door opener.
7. Wait for the green Battery Status LED to start flashing before proceeding to test the battery.

Test the Battery

Depending on the power level, the battery may need to charge before performing the test. The garage door opener must be unplugged to test the battery.

1. Open and close the door using the remote control or door control. While the motor is on, the battery status LED will either glow solid orange indicating opener is operating on battery power or will flash indicating low battery power.
   NOTE: The garage door opener may run slower if the battery is not fully charged.
2. Plug in the garage door opener. Verify the battery status LED is flashing green, indicating the battery is charging.

Charge the Battery

The battery charges when the garage door opener is plugged into a 120Vac electrical outlet that has power and requires 24 hours to fully charge. A fully charged battery supplies 12Vdc to the garage door opener for up to 24 hours of normal operation during an electrical power outage. After the electrical power has been restored, the battery will recharge within 24 hours. The battery will last approximately 1 to 2 years with normal usage.

Instructions for replacement are provided with the battery. To obtain maximum battery life and prevent damage, disconnect the battery when the garage door opener is unplugged for an extended period of time,such as a summer or winter home.

Battery Status

Green battery status LED: All systems are normal.

- i A solid green LED light indicates the battery is fully charged.
- i A flashing green LED indicates the battery is being charged.

Orange battery status LED: The garage door opener has lost power and is in battery backup mode.

- i A solid orange LED while the motor is on indicates the garage door opener is operating on battery power.
- i A flashing orange LED while the motor is on indicates the battery is low.
- i The opener beeps every 2 seconds while operating on battery power.

Red battery status LED: The battery needs to be replaced.

- i A solid red LED indicates the battery will no longer hold a charge. Call 1-888-331-4569 to purchase a replacement battery to allow your system to operate during a power outage.

myQ® App Control

Connect With Your Smartphone

YOU WILL NEED:

- Wi-Fi® enabled smartphone, tablet, or laptop
- Broadband Internet connection
- Wi-Fi® signal in the garage (2.4 GHz, 802.11b/g/n required).
- Password for your home network (router's main account, not guest network)
- myQ® serial number located on the garage door opener

DOWNLOAD THE myQ® APP TO SET UP AN ACCOUNT AND CONNECT

Open and close your door, get alerts, and set schedules from anywhere. Connected smart garage door openers also receive software updates to ensure the opener has the latest operational features. The garage door opener must run through a complete cycle before it will activate Wi-Fi® programming.

1. Download the myQ® App.
2. Set up an account and connect.

If you already have the myQ® App installed:

1. Check that your mobile device has the latest software.
2. Download the latest version of the myQ® App.

GET IT ON Google Play Download on the App Store

For more information on connecting your garage door opener, visit support.chamberlaingroup.com.
NOTE: *myQ® App control WILL NOT work if the garage door opener is operating on battery power. To erase the Wi-Fi settings from the opener, see page 40.*

Google Play and the Google Play logo are trademarks of Google LLC.
App Store and the Apple and App Store logos are trademarks of Apple Inc.

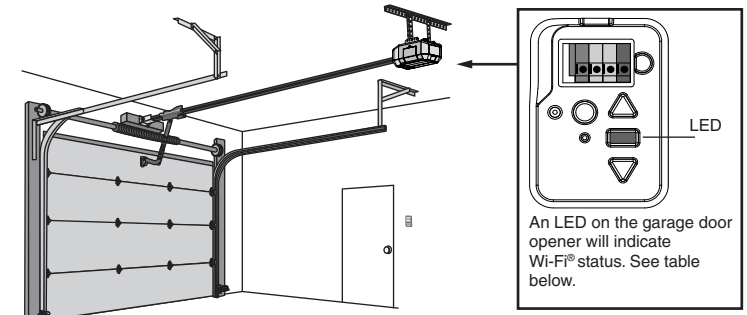

Wi-Fi Status	
LED	**Definition**
Blue	Off - Wi-Fi® is not turned on. Blinking - Garage door opener is in Wi-Fi® learn mode. Solid - Mobile device connected to the garage door opener.
Blue and Green	Blinking - Attempting to connect to router.
Green	Blinking - Attempting to connect to the Internet server. Solid - Wi-Fi® has been set up and garage door opener is connected to the Internet.

Camera

Set Up the Camera

Models B2310, B4310, B5330

1. Download the myQ® app and setup your account.
2. Follow the instructions in the app to setup and use the camera.

For more information on using the camera, visit support.chamberlaingroup.com.

NOTE: myQ® app control and camera WILL NOT work if the garage door opener is operating on battery power.

Camera Status During the camera set up process the LED color will change as it progresses through each state.	
LED	**Definition**
Flashing Blue	Camera is attempting to connect to the mobile device.
Solid Blue	Camera is connected to the mobile device.
Flashing Blue and Green	Camera is attempting to connect to the router.
Flashing Green	Camera is connected to the router and attempting to connect to myQ® server.
Solid Green	Camera is connected and working normally.
Solid White	Camera is powering up.
Flashing Red	Camera is overheating.
Flashing Purple	Camera firmware is updating.

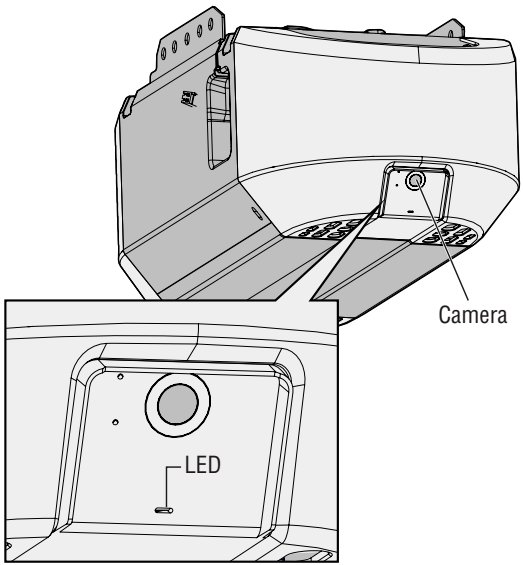

IMPORTANT SAFETY INSTRUCTIONS

⚠ WARNING

To reduce the risk of SEVERE INJURY or DEATH:

1. READ AND FOLLOW ALL WARNINGS AND INSTRUCTIONS.
2. ALWAYS keep remote controls out of reach of children. NEVER permit children to operate or play with garage door control push buttons or remote controls.
3. ONLY activate garage door when it can be seen clearly, it is properly adjusted, and there are no obstructions to door travel.
4. ALWAYS keep garage door in sight and away from people and objects until completely closed. NO ONE SHOULD CROSS THE PATH OF THE MOVING DOOR.
5. NO ONE SHOULD GO UNDER A STOPPED, PARTIALLY OPENED DOOR.
6. If possible, use emergency release handle to disengage trolley ONLY when garage door is CLOSED. Use caution when using this release with the door open. Weak or broken springs or unbalanced door could result in an open door falling rapidly and/or unexpectedly and increasing the risk of SEVERE INJURY or DEATH.
7. NEVER use emergency release handle unless garage doorway is clear of persons and obstructions.
8. NEVER use handle to pull garage door open or closed. If rope knot becomes untied, you could fall.
9. After ANY adjustments are made, the safety reversal system MUST be tested.
10. Safety reversal system MUST be tested every month. Garage door MUST reverse on contact with 1-1/2" (3.8 cm) high object (or a 2x4 laid flat) on the floor. Failure to adjust the garage door opener properly increases the risk of SEVERE INJURY or DEATH.
11. ALWAYS KEEP GARAGE DOOR PROPERLY BALANCED. An improperly balanced door may NOT reverse when required and could result in SEVERE INJURY or DEATH.
12. ALL repairs to cables, spring assemblies and other hardware, ALL of which are under EXTREME tension, MUST be made by a trained door systems technician.
13. ALWAYS disconnect electric and battery power to garage door opener BEFORE making ANY repairs or removing covers.
14. This operator system is equipped with an unattended operation feature. The door could move unexpectedly. NO ONE SHOULD CROSS THE PATH OF THE MOVING DOOR.
15. DO NOT install on a one-piece door if using devices or features providing unattended close. Unattended devices and features are to be used ONLY with sectional doors.

16. SAVE THESE INSTRUCTIONS.

Using your Garage Door Opener

The garage door opener can be activated through a wall-mounted door control, remote control, wireless keyless entry, or myQ® App.
When the door is closed and the garage door opener is activated, the door will open. If the door makes contact with an obstruction while opening, the door will stop, opener beeps, and lights flash 5 times. When the door is in any position other than closed and the garage door opener is activated, the door will close. If the garage door makes contact with an obstruction while closing, the door will reverse, opener beeps and lights flash 5 times.

The safety reversing sensors do not affect the opening cycle. The safety reversing sensor must be connected and aligned correctly before the garage door opener will move in the down direction.

However, you can close the door if you hold the button on the door control or keyless entry until the door is fully closed.

The garage door opener lights will turn on when the opener is initially plugged in, the opener is activated, or power is restored after interruption. The garage door opener lights automatically turn off after a set length of time. To adjust the light settings, see myQ app.

For energy efficiency the garage door will enter sleep mode when the door is fully closed. The sleep mode shuts the garage door opener down until activated. While in sleep mode the opener lights and the safety sensor LEDs will turn off. The garage door opener will not go into the sleep mode until it has completed 5 cycles upon power up.

Programming

Using your Door Control-Multi-Function Control Panel

1. Locate the LEARN button on your garage door opener (a ladder may be required). Press and immediately release the LEARN button.

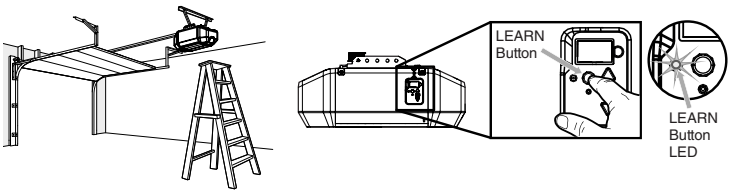

2. Within 30 seconds, press and hold the control panel push bar until the garage door opener lights flash and/or two clicks are heard.

TEST FOR SUCCESS:
Press the control panel push bar. The garage door opener will activate. If the garage door does not activate, repeat the programming steps.

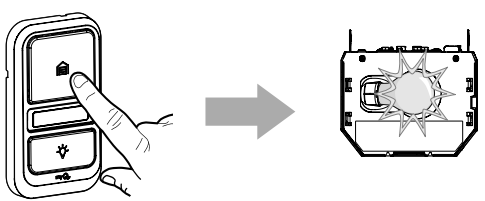

Door Control

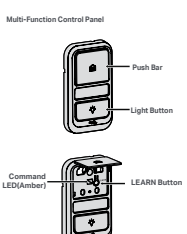

Using your Door Control-Push Button Door Control

1. Locate the LEARN button on your garage door opener (a ladder may be required). Press and immediately release the LEARN button.

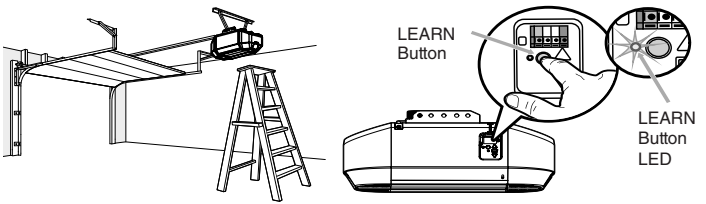

2. Within 30 seconds, press and hold the control panel push bar until the garage door opener lights flash and/or two clicks are heard.

TEST FOR SUCCESS:
Press the push button. The garage door opener will activate. If the garage door does not activate, repeat the programming steps.

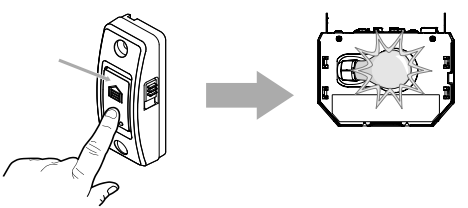

Door Control

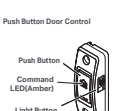

Programming

Remote Control and Keyless Entry

PRE-PROGRAMMED REMOTE CONTROL INCLUDED, NO NEED TO PROGRAM THE REMOTE.

To add or reprogram a remote control, follow the instructions below. Older Chamberlain remote controls are NOT compatible.

PROGRAM A REMOTE CONTROL OR WIRELESS KEYPAD TO YOUR GARAGE DOOR OPENER

1. Lift the push bar. Press the LEARN button twice (after the second press, the LED on the door control panel will pulse repeatedly).

2a. Within 30 seconds, press and hold the button on the remote control that you wish to use. Release the button when the garage door opener lights flash and/or two clicks are heard.

2b. Within 30 seconds, enter a 4-8 digit personal identification number (PIN) of your choice. Press and hold the HOME button until the garage door opener lights flash and/or two clicks are heard.

TEST FOR SUCCESS: To operate the garage door opener, press the remote button you programmed. The garage door should activate. If it does not, repeat the programming steps. Alternatively, with the garage door closed, enter the PIN you programmed, and press the HOME button. The garage door will then open. If it does not open, repeat the programming steps.

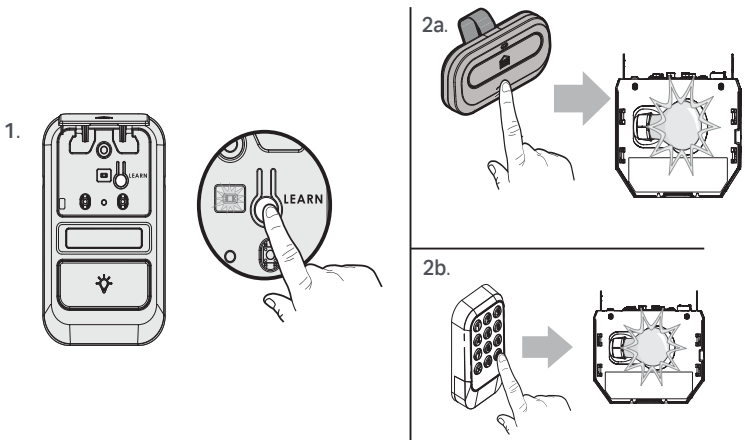

PROGRAM USING THE GARAGE DOOR OPENER LEARN BUTTON

1. Locate the LEARN Button.
2. Press and immediately release the LEARN button. The LEARN LED will glow steady for 30 seconds.
3. Remote Control: Press and hold the button on the remote control that you wish to use.
   Keyless Entry: Enter a 4-digit personal identification number (PIN) of your choice on the keyless entry keypad. Then press and hold the ENTER button.

Release the button when the garage door opener lights blink or two clicks are heard.

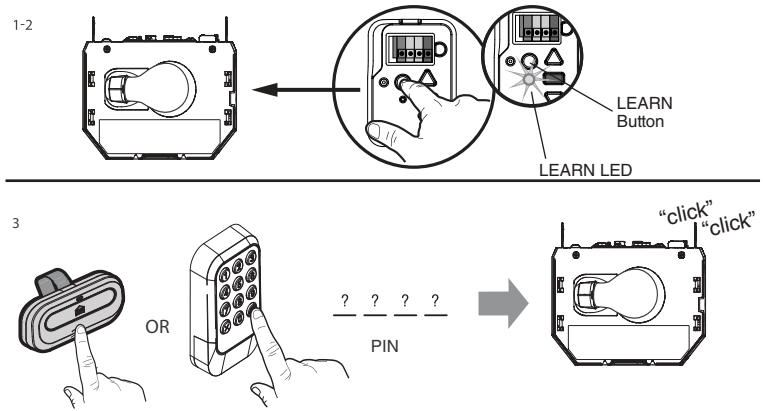

HomeLink®

This opener is compatible with HomeLink versions 4, 5 and 6. HomeLink programming and support can be obtained by contacting HomeLink directly at 1-800-355-3515 or by visiting their website at www.HomeLink.com.

Erase the Memory

ERASE ALL REMOTE CONTROLS AND KEYLESS ENTRIES

1. Press and hold the LEARN button on garage door opener until the learn LED goes out (approximately 6 seconds). All remote control and keyless entry codes are now erased. Reprogram any accessory you wish to use.

ERASE ALL DEVICES INCLUDING myQ® ENABLED ACCESSORIES

1. Press and hold the LEARN button on garage door opener until the learn LED goes out (approximately 6 seconds).
2. Immediately press and hold the LEARN button again until the learn LED goes out. All codes are now erased. Reprogram any accessory you wish to use.

ERASE THE CONNECTION FROM GARAGE DOOR OPENER TO HOME Wi-Fi® NETWORK

1. Press and hold the black adjustment button on the garage door opener until 3 beeps are heard (Approximately 6 seconds).

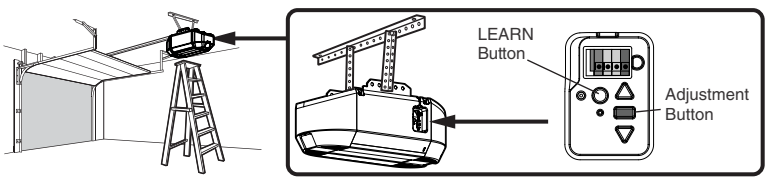

To Open the Door Manually

WARNING

To prevent possible SERIOUS INJURY or DEATH from a falling garage door:

- If possible, use emergency release handle to disengage trolley ONLY when garage door is CLOSED. Weak or broken springs or unbalanced door could result in an open door falling rapidly and/or unexpectedly.
- NEVER use emergency release handle unless garage doorway is clear of persons and obstructions.
- NEVER use handle to pull door open or closed. If rope knot becomes untied, you could fall.

DISCONNECT THE TROLLEY

1. The door should be fully closed if possible.
2. Pull down on the emergency release handle so the trolley release arm snaps to the vertical position. The door can now be raised and lowered as often as necessary.

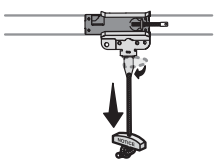

TO RE-CONNECT THE TROLLEY

1. Pull the emergency release handle toward the garage door opener so the trolley release arm snaps to the horizontal position. The trolley will reconnect on the next UP or DOWN operation, either manually or by using the door control or remote control.

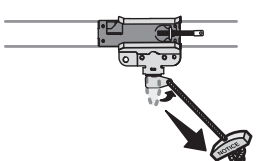

Maintenance

Maintenance Schedule

EVERY MONTH

- Manually operate door. If it is unbalanced or binding, call a trained door systems technician.
- Check to be sure door opens and closes fully. Adjust if necessary, see page 32.
- Test the safety reversal system. Adjust if necessary, see page 33.

EVERY YEAR

- Oil door rollers, bearings, and hinges. The garage door opener does not require additional lubrication. Do not grease the door tracks.
- Test the battery backup and consider replacing the battery to ensure the garage door opener will operate during an electrical power outage, see page 34 to test the battery backup.

The Remote Control Battery

WARNING

To prevent possible SERIOUS INJURY or DEATH:

- NEVER allow small children near batteries.
- If battery is swallowed, immediately notify doctor.

To reduce risk of fire, explosion, or chemical burn:

- Replace ONLY with 3V CR2032 coin batteries.
- DO NOT recharge, disassemble, heat above 212°F (100°C), or incinerate.

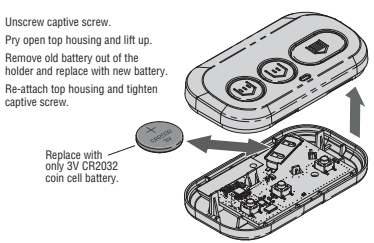

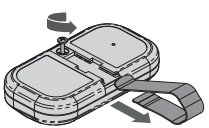

NOTICE: This device complies with part 15 of the FCC rules and Innovation, Science and Economic Development Canada license-exempt RSSs. Operation is subject to the following two conditions: (1) this device may not cause harmful interference, and (2) this device must accept any interference received, including interference that may cause undesired operation.

Any changes or modifications not expressly approved by the party responsible for compliance could void the user's authority to operate the equipment.

This device must be installed to ensure a minimum 20 cm (8 in.) distance is maintained between users/bystanders and device.

This device has been tested and found to comply with the limits for a Class B digital device, pursuant to part 15 of the FCC rules and Industry Canada ICES standard. These limits are designed to provide reasonable protection against harmful interference in a residential installation. This equipment generates, uses and can radiate radio frequency energy and, if not installed and used in accordance with the instructions, may cause harmful interference to radio communications. However, there is no guarantee that interference will not occur in a particular installation. If this equipment does cause harmful interference to radio or television reception, which can be determined by turning the equipment off and on, the user is encouraged to try to correct the interference by one or more of the following measures:

Reorient or relocate the receiving antenna.

Increase the separation between the equipment and receiver.

Connect the equipment into an outlet on a circuit different from that to which the receiver is connected.

Consult the dealer or an experienced radio/TV technician for help.

Troubleshooting

Diagnostic Chart

Your garage door opener is programmed with self-diagnostic capabilities. The UP and DOWN arrows on the garage door opener flash the diagnostic codes.

DIAGNOSTIC CODE ▲ Flashes	▼ Flashes	SYMPTOM	SOLUTION
1	1	The garage door opener will not close.	Safety reversing sensors are not installed, connected, or wires may be cut. Inspect sensor wires for a disconnected or cut wire.
1	2	The garage door opener will not close.	There is a short or reversed wire for the safety reversing sensors. Inspect safety sensor wire at all staple and connection points, replace wire or correct as needed
1	3	The door control will not function.	The wires for the door control are shorted or the door control is faulty. Inspect door control wires at all staple and connection points, replace wire or correct as needed.
1	4	The garage door opener will not close.	Safety reversing sensors are misaligned or were momentarily obstructed. Realign both sensors until both LEDs are glowing steady. Make sure nothing is hanging or mounted on the door that would interrupt the sensor's path while closing
1	5	Door moves 6-8" (15-20 cm) stops or reverses.	Manually open and close the door. Check for binding or obstructions, such as a broken spring or door lock, correct as needed. Check wiring connections at travel module and at the logic board. Replace travel module if necessary.
		No movement, only a single click.	Manually open and close the door. Check for binding or obstructions, such as a broken spring or door lock, correct as needed. Replace logic board if necessary.
		Opener hums for 1-2 seconds no movement.	Manually open and close the door. Check for binding or obstructions, such as a broken spring or door lock, correct as needed. Replace motor if necessary.
2	1-5	No movement, or sound.	Replace logic board.
3	2	Unable to set the travel or retain position.	Check travel module for proper assembly, replace if necessary.
3	3	The battery status LED is constantly flashing green.	Battery backup charging circuit error, replace the logic board.
4	1-4	Door is moving, stops or reverses. Opener beeps and lights flash.	Manually open and close the door. Check for binding or obstructions, such as a broken spring or door lock, correct as needed. If the door is binding or sticking contact a trained door systems technician. If door is not binding or sticking attempt to reprogram travel, see Program the Travel page 32.
4	5	Opener runs approximately 6-8" (15-20 cm), stops and reverses.	Communication error to travel module. Check travel module connections, replace travel module if necessary.
4	6	The garage door opener will not close	Safety reversing sensors are misaligned or were momentarily obstructed. Realign both sensors to ensure both LEDs are steady and not flickering. Make sure nothing is hanging or mounted on the door that would interrupt the sensor's path while closing.

Troubleshooting

Additional Troubleshooting

Below are basic troubleshooting tips, for additional help call 1-888-331-4569.

My garage door opener will not close:
Check to make sure the LEDs in both sensors are glowing steadily. The LEDs in both sensors will glow steadily if they are aligned and wired correctly.

My vehicle's HomeLink® is not programming to my garage door opener:
This opener is compatible with HomeLink versions 4, 5 and 6. HomeLink programming and support can be obtained by contacting HomeLink directly at 1-800-355-3515 or by visiting their website at www.HomeLink.com.

My garage door opener beeps:
The garage door opener can beep for several reasons:

- The opener senses an obstruction while traveling.
- Garage door opener has been activated through a device or feature such as Timer-to-Close, check battery status.

My neighbor's remote control opens my garage door:
Erase the memory from your garage door opener and reprogram the remote control(s).

The garage door moves 6-8", stops, or reverses:

- Manually open and close the garage door. Garage door may be binding or there may be an obstruction. If the door is binding, call a trained door systems technician.
- Possible travel module failure.

My remote control will not activate the garage door:
Verify the lock feature is not activated on the remote control. Add myQ app to control this feature. Reprogram remote and test battery of remote.

The wall-mounted door control will not function:
The wires for the door control are shorted or the door control is faulty the wall-mounted door control will not function: reprogram wall control.

Garage door opener hums for 1-2 seconds with no movement and 5 flashes and 5 beeps occur:
Manually open and close the garage door. Garage door may be binding or there may be an obstruction. If the door is binding, call a trained door systems technician.

Cannot connect garage door opener to home Wi-Fi network:
Ensure the myQ® Serial number was entered correctly and try again. The myQ® characters are between A-F and 0-9 only.

Wi-Fi® Troubleshooting

The garage door opener will NOT enter Wi-Fi® learn mode:

- After the initial installation of the garage door opener, the garage door opener must complete a full cycle (open and closed) before the Wi-Fi® learn mode can be activated.
- If there has been a recent power outage, the garage door opener must complete a full cycle before the Wi-Fi® learn mode can be activated.

See page 35 to activate Wi-Fi LEARN mode.

If your black adjustment button is not solid green, call 1-888-331-4569.

Warranty

To see repair parts for your garage door opener, identify the model number on the end panel of the opener and visit support.chamberlaingroup.com to download or print the installation manual.

CHAMBERLAIN® LIMITED WARRANTY

The Chamberlain Group LLC® ("Seller") warrants to the first retail purchaser of this product, for the residence in which this product is originally installed, that it is free from defects in materials and/or workmanship for a specific period of time as defined below (the "Warranty Period"). The warranty period commences from the date of purchase.

Warranty Period					
Model	**Parts**	**Motor**	**Accessories**	**Battery Backup**	**Belt/Chain**
B5330	1 year	5 years	1 year	1 year	5 years
B4310	1 year	5 years	1 year	1 year	5 years
B2310	1 year	5 years	1 year	-	5 years
B3010	1 year	5 years	1 year	1 year	5 years
B3000	1 year	5 years	1 year	1 year	5 years
B4210	1 year	5 years	1 year	1 year	5 years
C4310	1 year	5 years	1 year	1 year	1 year
C3000	1 year	5 years	1 year	1 year	1 year
C1000	1 year	4 years	1 year	-	1 year
D1000	1 year	4 years	1 year	-	1 year

The proper operation of this product is dependent on your compliance with the instructions regarding installation, operation, and maintenance and testing. Failure to comply strictly with those instructions will void this limited warranty in its entirety. If, during the limited warranty period, this product appears to contain a defect covered by this limited warranty, visit Chamberlain.com, before dismantling this product. You will be advised of disassembly and shipping. Then send the product or component, pre-paid and insured, as directed to our service center for warranty repair. Please include a brief description of the problem and a dated proof-of-purchase receipt with any product returned for warranty repair. Products returned to Seller for warranty repair, which upon receipt by Seller are confirmed to be defective and covered by this limited warranty, will be repaired or replaced (at Seller's sole option) at no cost to you and returned pre-paid. Defective parts will be repaired or replaced with new or factory-rebuilt parts at Seller's sole option. [You are responsible for any costs incurred in removing and/or reinstalling the product or any component].

ALL IMPLIED WARRANTIES FOR THE PRODUCT, INCLUDING BUT NOT LIMITED TO ANY IMPLIED WARRANTIES OF MERCHANTABILITY AND FITNESS FOR A PARTICULAR PURPOSE, ARE LIMITED IN DURATION TO THE APPLICABLE LIMITED WARRANTY PERIOD SET FORTH ABOVE FOR THE RELATED COMPONENT(S), AND NO IMPLIED WARRANTIES WILL EXIST OR APPLY AFTER SUCH PERIOD. Some States and Provinces do not allow limitations on how long an implied warranty lasts, so the above limitation may not apply to you. THIS LIMITED WARRANTY DOES NOT COVER NON-DEFECT DAMAGE, DAMAGE CAUSED BY IMPROPER INSTALLATION, OPERATION OR CARE (INCLUDING, BUT NOT LIMITED TO ABUSE, MISUSE, FAILURE TO PROVIDE REASONABLE AND NECESSARY MAINTENANCE, UNAUTHORIZED REPAIRS OR ANY ALTERATIONS TO THIS PRODUCT), LABOR CHARGES FOR REINSTALLING A REPAIRED OR REPLACED UNIT, REPLACEMENT OF CONSUMABLE ITEMS (E.G., BATTERIES IN REMOTE CONTROL TRANSMITTERS AND LIGHT BULBS), OR UNITS INSTALLED FOR NON-RESIDENTIAL USE. THIS LIMITED WARRANTY DOES NOT COVER ANY PROBLEMS WITH, OR RELATING TO, THE GARAGE DOOR OR GARAGE DOOR HARDWARE, INCLUDING BUT NOT LIMITED TO THE DOOR SPRINGS, DOOR ROLLERS, DOOR ALIGNMENT OR HINGES. THIS LIMITED WARRANTY ALSO DOES NOT COVER ANY PROBLEMS CAUSED BY INTERFERENCE. UNDER NO CIRCUMSTANCES SHALL SELLER BE LIABLE FOR CONSEQUENTIAL, INCIDENTAL OR SPECIAL DAMAGES ARISING IN CONNECTION WITH USE, OR INABILITY TO USE, THIS PRODUCT. IN NO EVENT SHALL SELLER'S LIABILITY FOR BREACH OF WARRANTY, BREACH OF CONTRACT, NEGLIGENCE OR STRICT LIABILITY EXCEED THE COST OF THE PRODUCT COVERED HEREBY. NO PERSON IS AUTHORIZED TO ASSUME FOR US ANY OTHER LIABILITY IN CONNECTION WITH THE SALE OF THIS PRODUCT.

Some states and provinces do not allow the exclusion or limitation of consequential, incidental or special damages, so the above limitation or exclusion may not apply to you. This limited warranty gives you specific legal rights, and you may also have other rights, which vary from state to state and province to province.

Reese's Law

⚠ WARNING

- **INGESTION HAZARD:** This product contains a button cell or coin battery.
- **DEATH** or serious injury can occur if ingested.
- A swallowed button cell or coin battery can cause **Internal Chemical Burns** in as little as **2 hours**.
- **KEEP** new and used batteries **OUT OF REACH of CHILDREN**.
- **Seek immediate medical attention** if a battery is suspected to be swallowed or inserted inside any part of the body.

- Remove and immediately recycle or dispose of used batteries according to local regulations and keep away from children. Do NOT dispose of batteries in household trash or incinerate.
- Even used batteries may cause severe injury or death.
- Call a local poison control center for treatment information.
- Battery Type: CR2032
- Battery Voltage: 3 V
- Non-rechargeable batteries are not to be recharged.
- Do not force discharge, recharge, disassemble, heat above (manufacturer's specified temperature rating) or incinerate. Doing so may result in injury due to venting, leakage or explosion resulting in chemical burns.
- Ensure the batteries are installed correctly according to polarity (+ and -).
- Do not mix old and new batteries, different brands or types of batteries, such as alkaline, carbon-zinc, or rechargeable batteries.
- Remove and immediately recycle or dispose of batteries from equipment not used for an extended period of time according to local regulations.
- Always completely secure the battery compartment. If the battery compartment does not close securely, stop using the product, remove the batteries, and keep them away from children.

Automatic Garage Door Opener Safety & Maintenance Guide

Garage Door Opener Safety-An Automatic Decision

A garage door is the largest moving object in the home. An improperly adjusted garage door and opener can exert deadly force when the door closes – which could lead to entrapment of children or adults and subsequent injury or death.

Proper installation, operation, maintenance, and testing of the garage door and automatic opener are necessary to provide a safe, trouble-free system. Careless operation or allowing children to play with or use garage door opener controls are also dangerous situations that can lead to tragic results. A few simple precautions can protect your family and friends from potential harm. Please review the safety and maintenance tips in this guide carefully and keep it for reference. Check the operation of your garage door and opener to ensure they function in a safe and trouble-free manner. Be sure to read all Important Safety Information found in your garage door opener's manual as it provides more details and safety considerations than can be supplied with this guide.

Garage Door Openers are Not Toys

Discuss garage door and opener safety with your children. Explain the danger of being trapped under the door.

Stay away from a moving door.

The wall-mounted push button should be out of reach of children, at least 5 feet from the nearest standing surface and away from all moving parts. Mount and use the button where you can clearly see the closing garage door.

Keep transmitters and remote controls out of reach of children.

Do not let children play with or use transmitters or other remote control devices.

Keep the door in sight until it completely closes when using the wall-mounted push button or transmitter.

Routine Maintenance Can Prevent Tragedies

Make monthly inspection and testing of your garage door and opener system a part of your regular routine. Review your owner's manual for both the door and door opener. If you don't have the owner's manuals, contact the manufacturer(s) and request a copy for your specific model(s). Look for the opener model number on the back of the power unit.

WARNING: SPRINGS ARE UNDER HIGH TENSION. ONLY QUALIFIED INDIVIDUALS SHOULD ADJUST THEM.

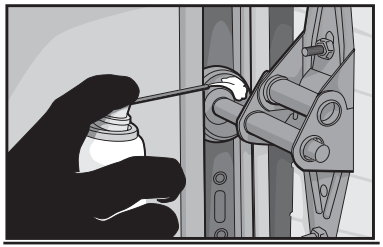

Visually check the door and installation:

- Starting with the door in the closed position, use the manual disconnect on the opener to disconnect the door.
- Look for signs of wear or damage on hinges, rollers, springs, and door panels.
- These parts may require periodic lubrication. Check the owner's manual for suggested maintenance.
- If any signs of damage are evident, contact a trained door systems technician for assistance.
- Verify the photo eye height is no higher than 6" from the garage floor.

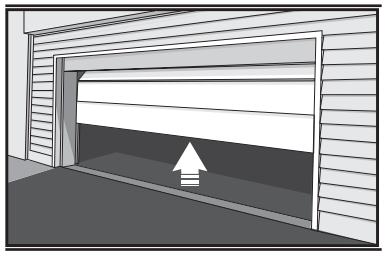

Test the door for proper operation:

- Open and close the door manually using handles or suitable gripping points.
- The door should move freely and without difficulty.
- The door should balance and stay partially open 3–4 feet above the floor.
- If you detect any signs of improper operation, contact a trained door systems technician for assistance.

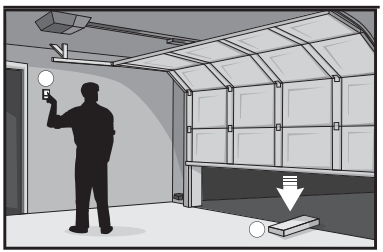

Test the opener safety features:

- Reconnect the opener to the door using the manual disconnect and open the door.
- Place a 2x4 board flat in the path of the door (1) and try to close it (2). The door should stop when it comes in contact with the 2x4 and then reverse direction.
- Block the photoelectric sensor by waving an object in front of the sensor and attempt to close the door. The door should not close unless the wall-mounted push button is manually held during operation.
- If the opener does not perform as described, contact a trained door systems technician for assistance.

DASMA®
Door & Access Systems
Manufacturers Association
International

Repair Parts

Garage Door Opener Parts - Models B3000, B3010

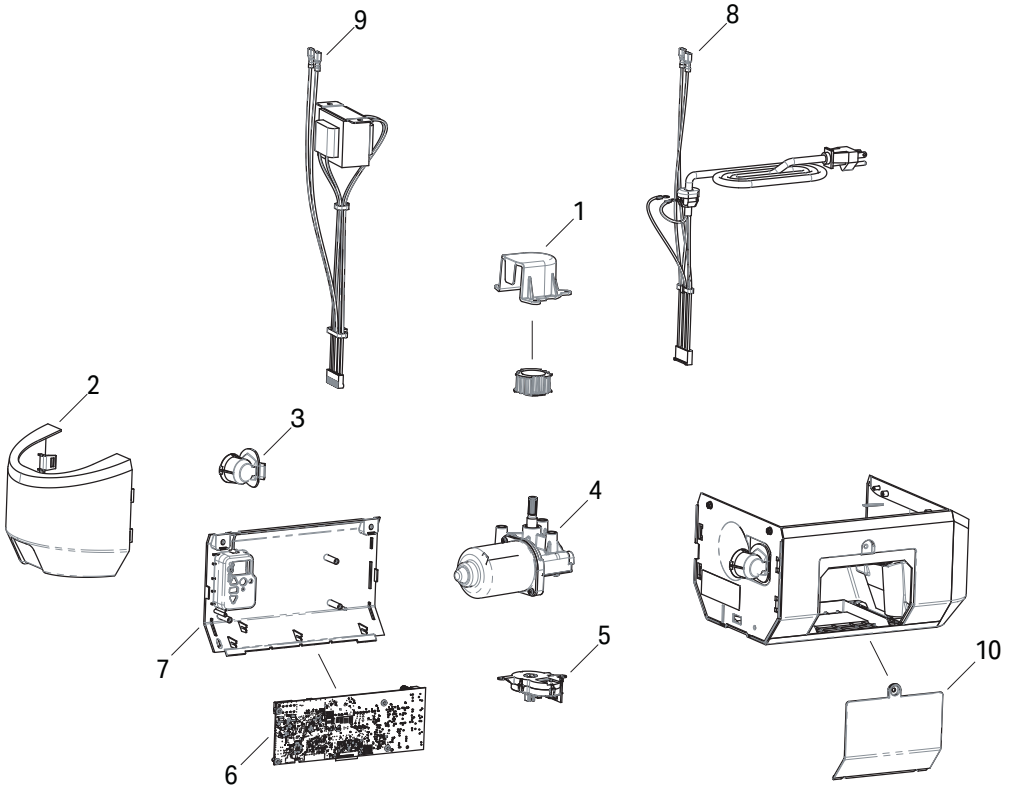

	Description	Part Number
1	Belt Sprocket and Cover	041-0580-000
2	Light Lens	041-0581-001
3	Light Socket	041C0279
4	Motor with Travel Module	041-0570-000
5	Travel Module with Wire Harness	041D8071-4
6	Logic Board	030DCT
7	Logic Board Side Panel	041-0586-000
8	Line Cord	041-0583-000
9	Transformer	041-0584-001
10	Battery Door	041-0587-000

Repair Parts

Garage Door Opener Parts - Models B2310, B4310, B5330

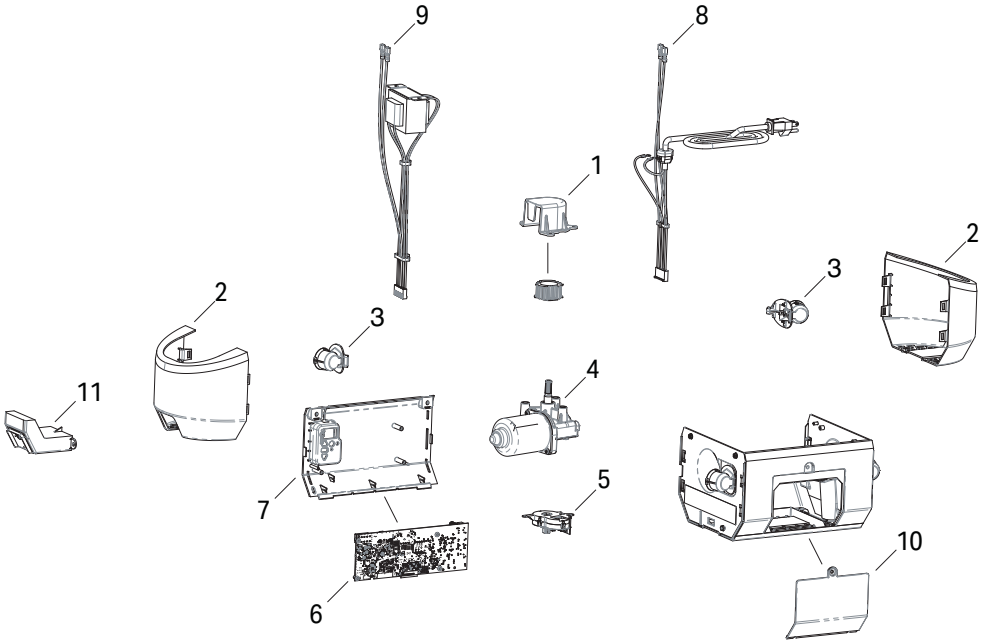

	Description	Part Number
1	Belt Sprocket and Cover	041-0580-000
2	Light Lens (Camera Side)	041-0582-001
3	Light Lens (Non Camera Side) Light Socket	041-0581-001 041C0279
4	Motor with Travel Module	041-0570-000
5	Travel Module with Wire Harness	041D8071-4
6	Logic Board	030DCT
7	Logic Board Side Panel	041-0586-000
8	Line Cord	041-0583-000
9	Transformer (B2310) Transformer (B4310, B5330)	041-0585-000 041-0585-001
10	Battery Door	041-0587-000
11	Camera	GDOCAMV1

Repair Parts

Garage Door Opener Parts - Models B4210

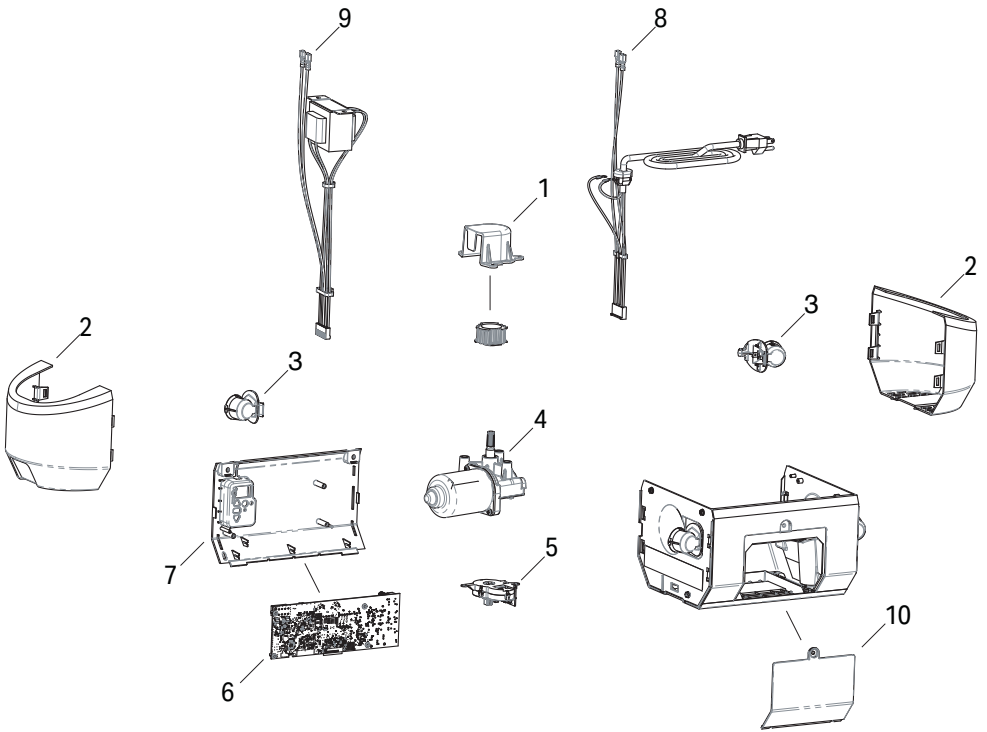

	Description	Part Number
1	Belt Sprocket and Cover	041-0580-000
2	Light Lens	041-0581-001
3	Light Socket	041C0279
4	Motor with Travel Module	041-0570-000
5	Travel Module with Wire Harness	041D8071-4
6	Logic Board	030DCT
7	Logic Board Side Panel	041-0586-000
8	Line Cord	041-0583-000
9	Transformer	041-0585-001
10	Battery Door	041-0587-000

©2026 The Chamberlain Group LLC
Chamberlain, the Chamberlain logo and myQ logo are trademarks, service marks, and/or registered trademarks of The Chamberlain Group LLC. All rights reserved.
The Chamberlain Group LLC, 300 Windsor Drive, Oak Brook, IL, 60523, United States

114-6402-000