LITTLE TREE

Assembly Instructions

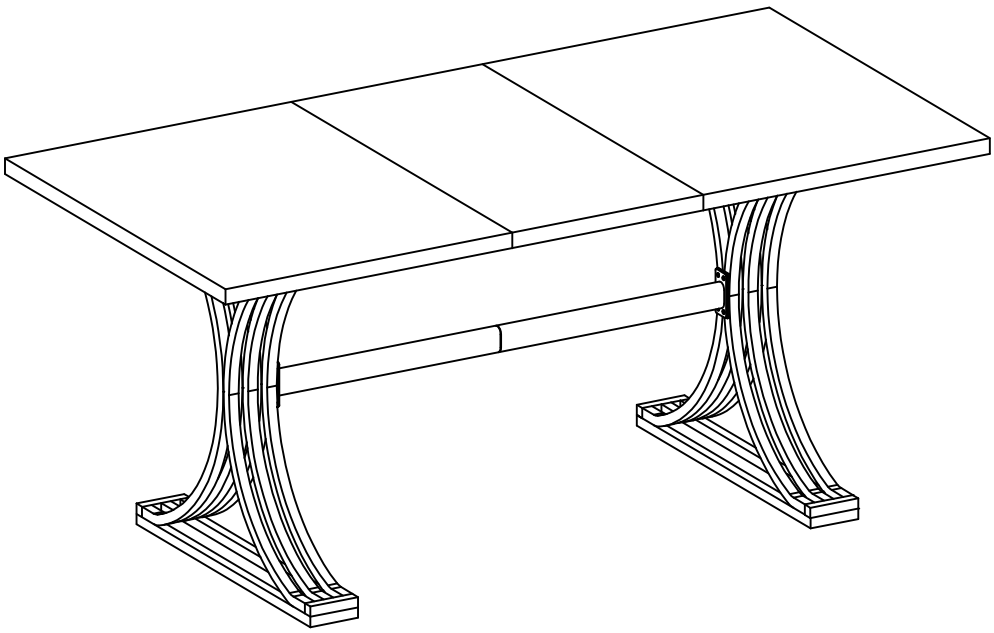

Model No. HOGA-XK00425

Table

Call us!

We're here to help!

If you have any issues with this product, please contact our customer service team **before returning** it.



We want you to be completely satisfied with your purchase! If anything is missing, damaged, incorrect, or not what you expected, don't worry. Please keep the outer packaging and take photos of both the packaging and products, and then reach out to us at **support@tribesigns.com** or call us at **1-424-220-6888.** We'll take care of everything and send you a free replacement, so you can enjoy your purchase as soon as possible without any hassle.

Assembly Instructions:

1. Carefully read these instructions and keep them for future reference.
2.Refer to the parts list for guidance and ensure that you have all the pieces before starting the assembly process, if anything is missing, damaged, incorrect, contact us FIRSTLY BEFORE assembling.
3.When assembling, place all parts on a soft, clean, and flat surface, such as a carpet, to prevent any scratches.
4.To avoid misalignment of the holes, Please don't full tighten the screws until you ensure all parts in place.

Follow Tribesign:

Facebook Twitter Pinterest YouTube Instagram

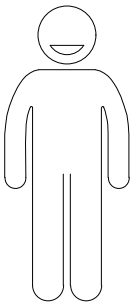

x1

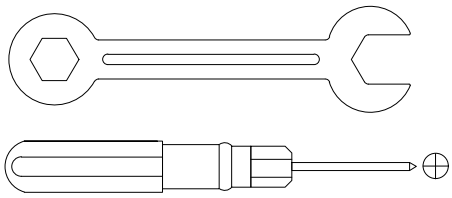

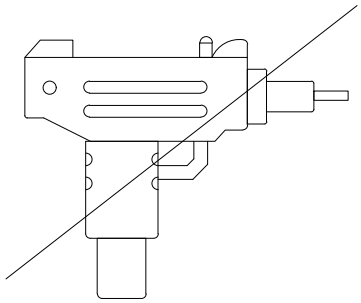

When using the electric screwdriver ,
Reduce the power and torque to avoid damaging the furniture

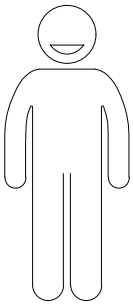

?

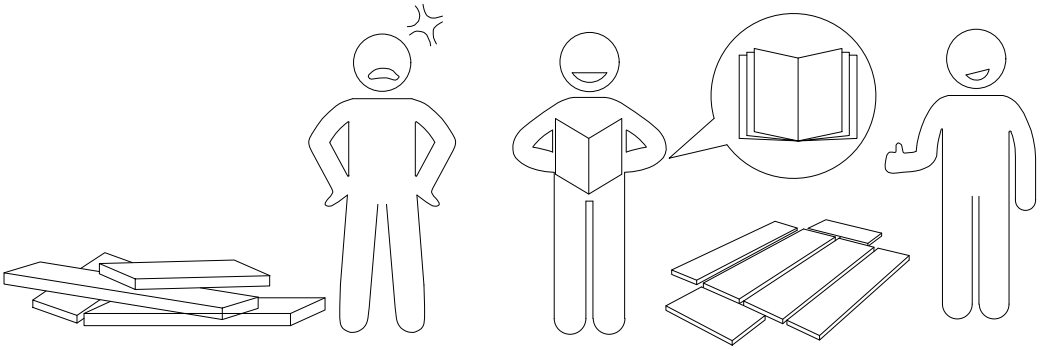

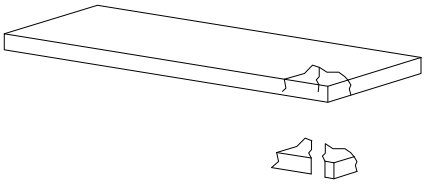

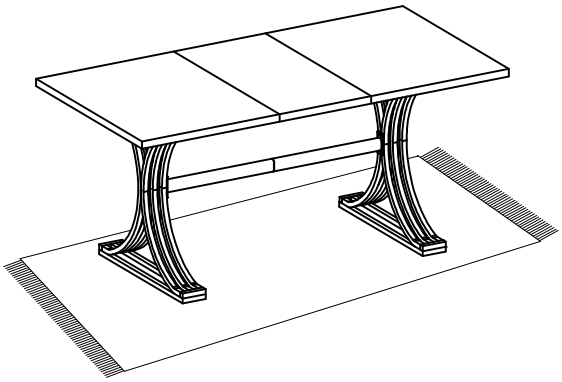

Install tip-over restraint provided）
Use of tip-over restraints may only reduce but not eliminate,
the risk of tip-over.

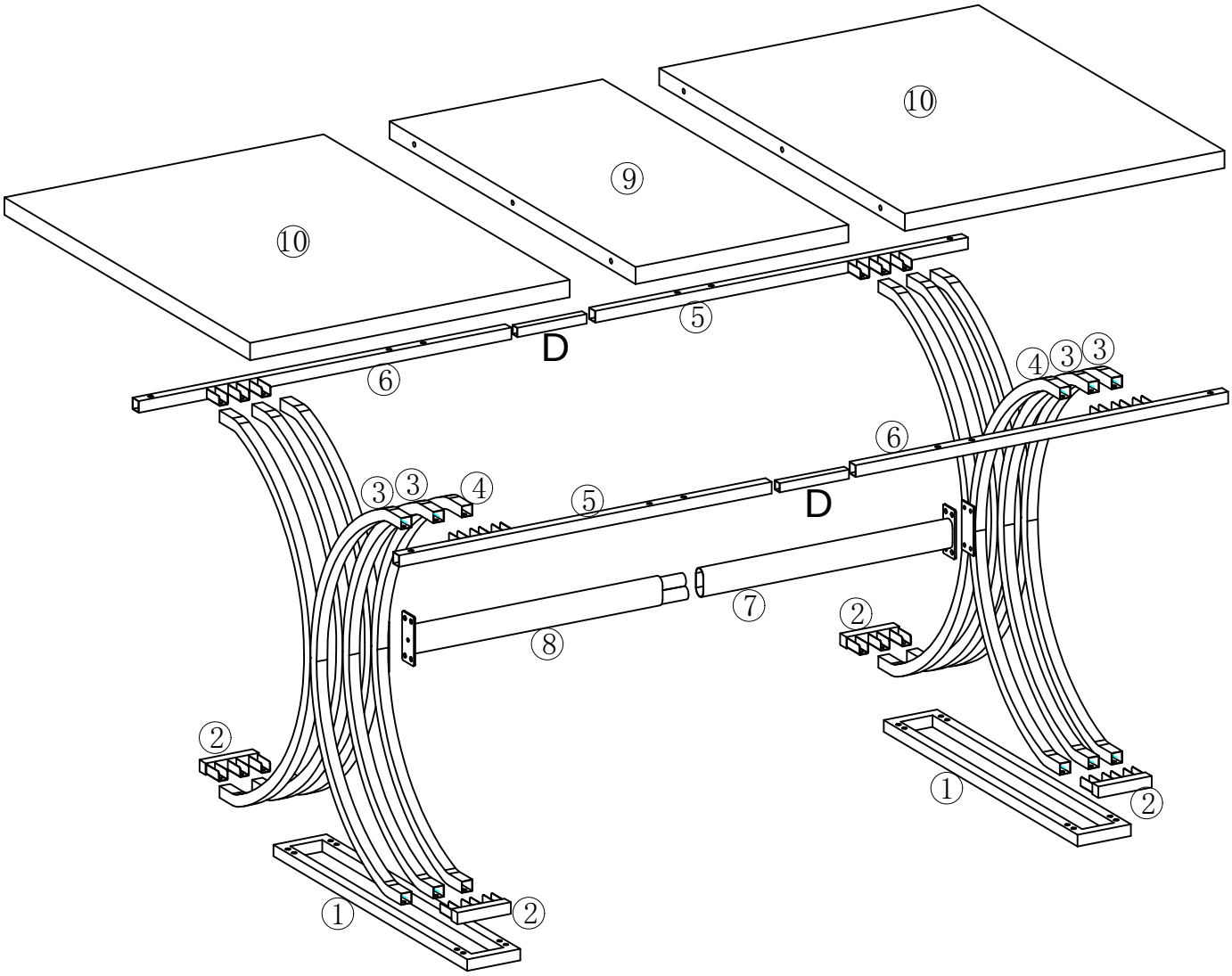

A  ×8	B M6×12mm 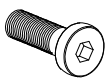 ×50	C M6×30mm 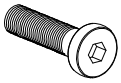 ×28	D 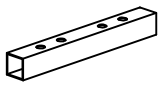 ×2
E 8X30mm 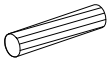 ×6	F 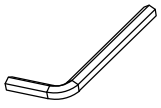 ×1		

1

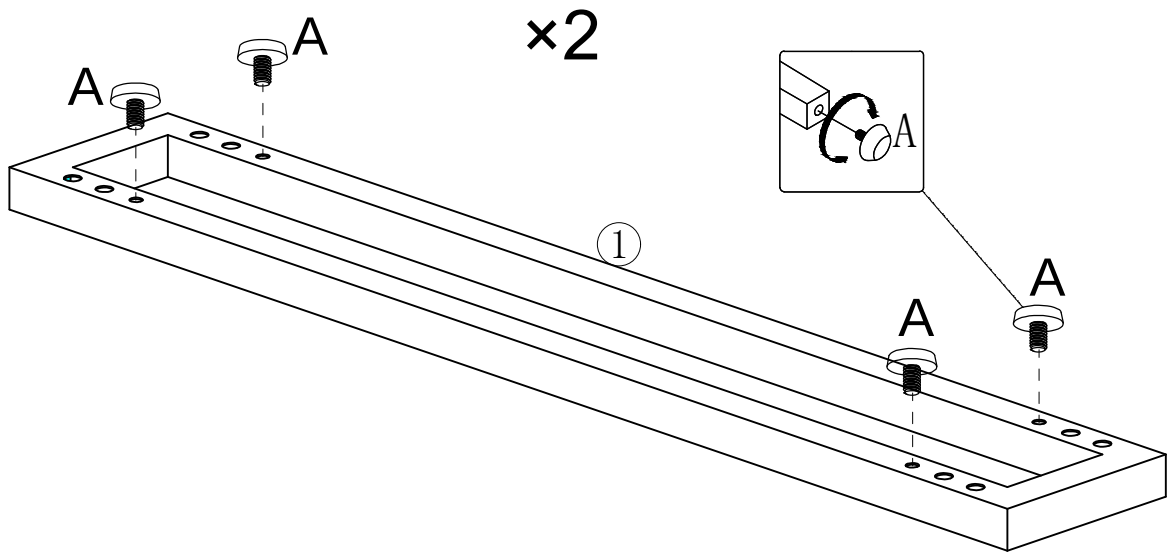

A

×8

2

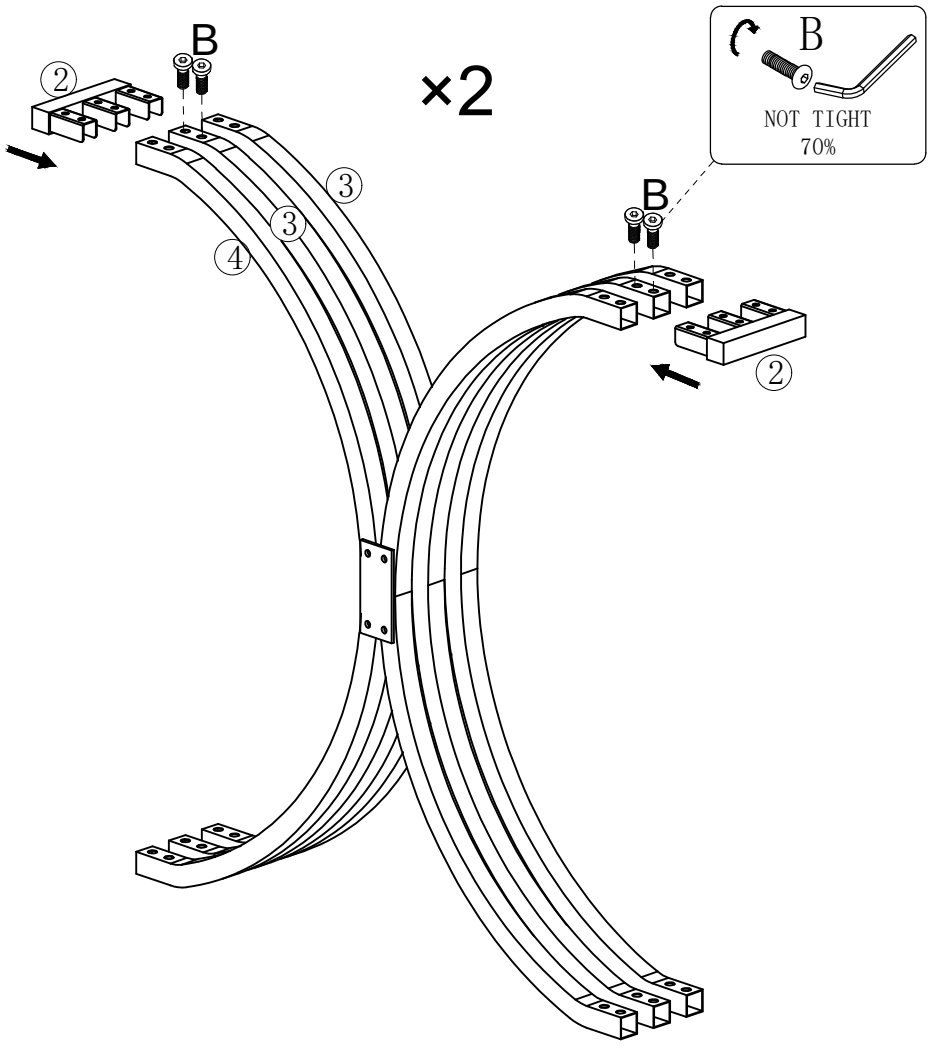

B M6×12mm

×8

3

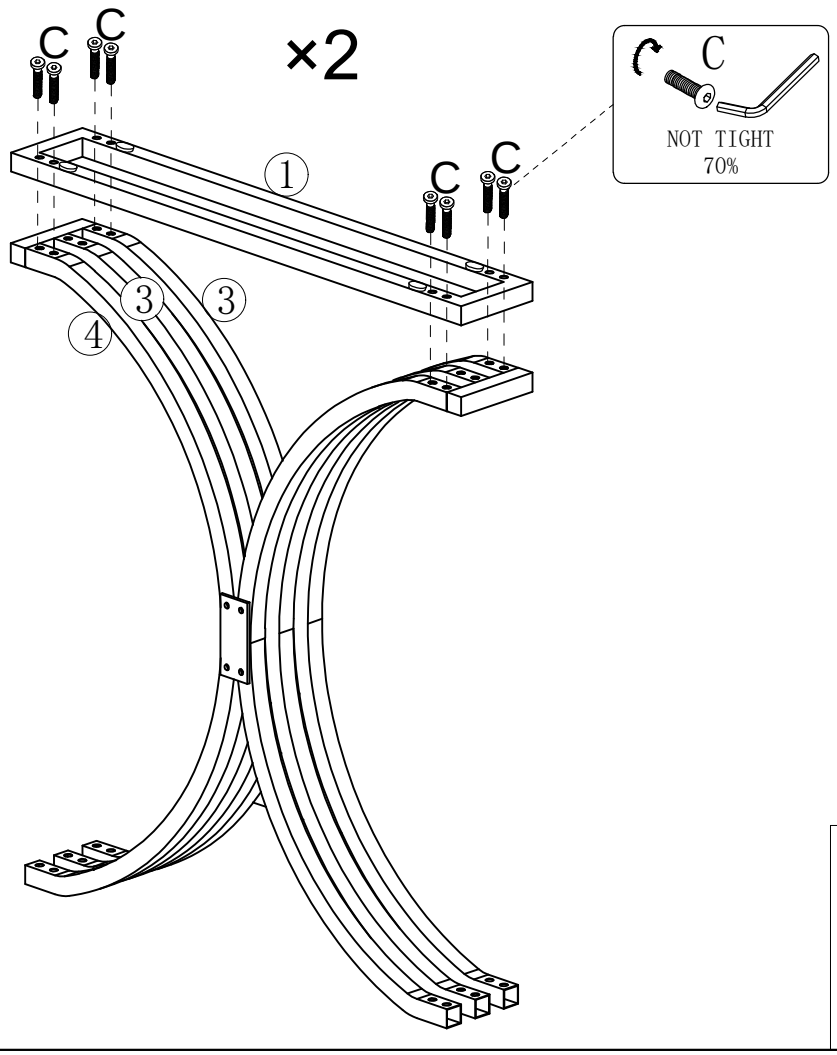

C M6×30mm

×16

4

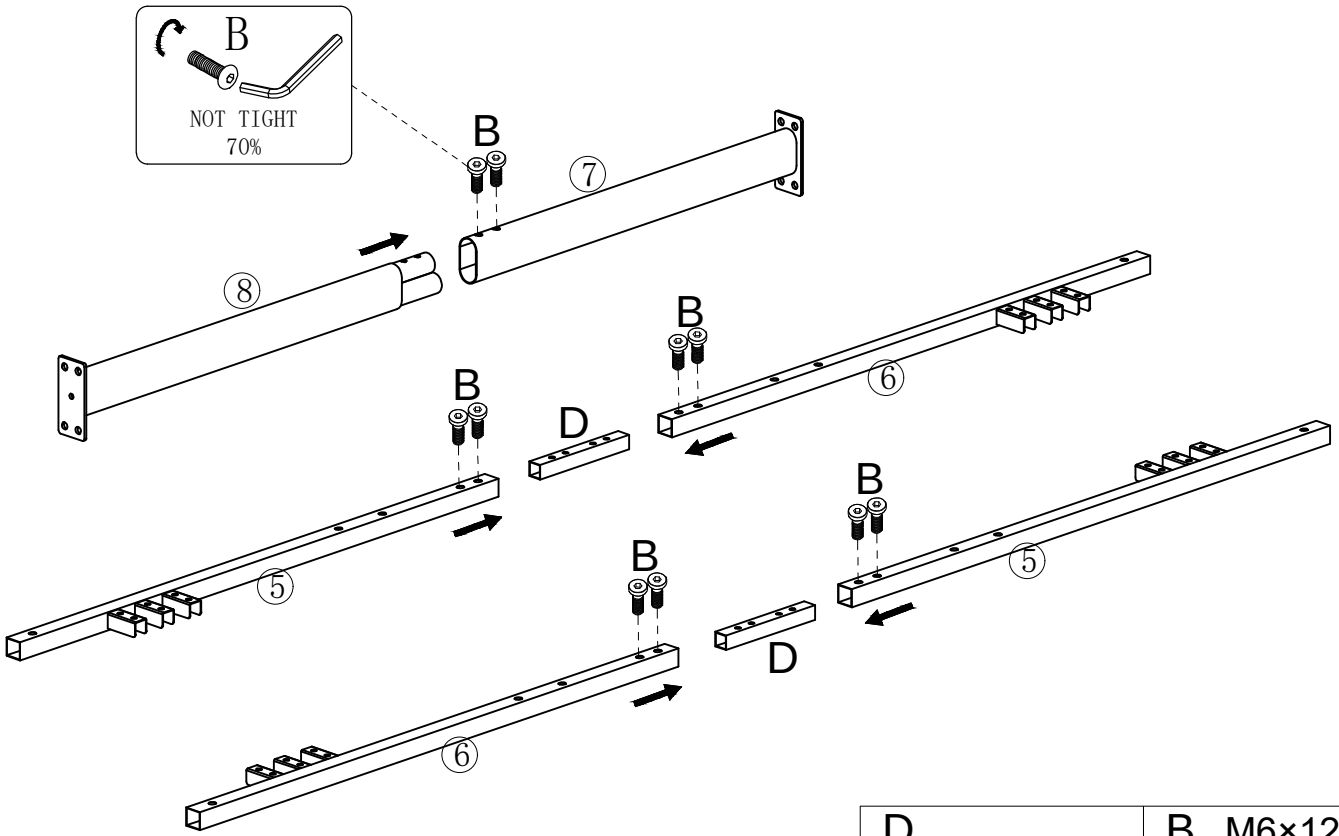

D

×2

B M6×12mm

×10

5

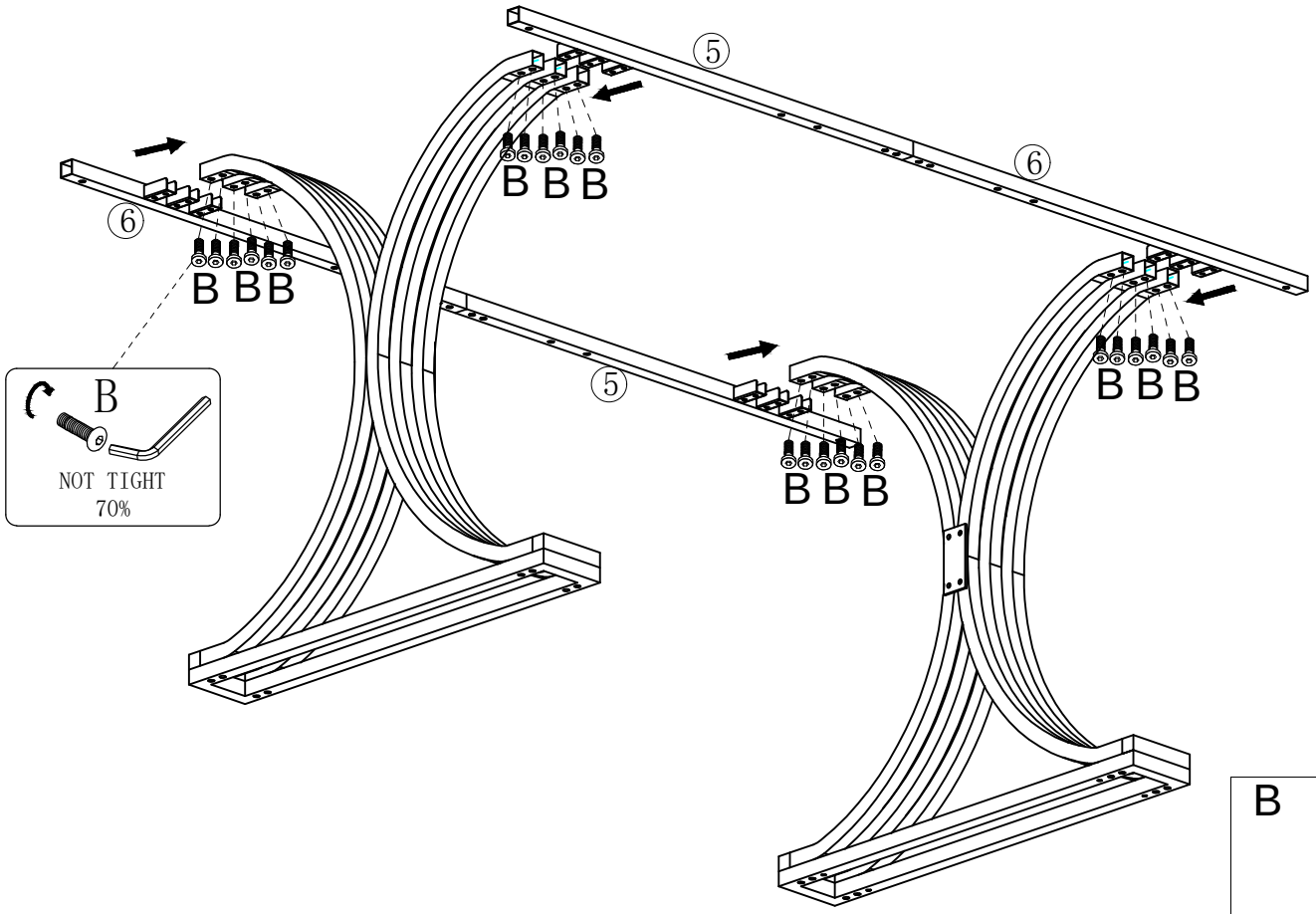

B M6×12mm

×24

6

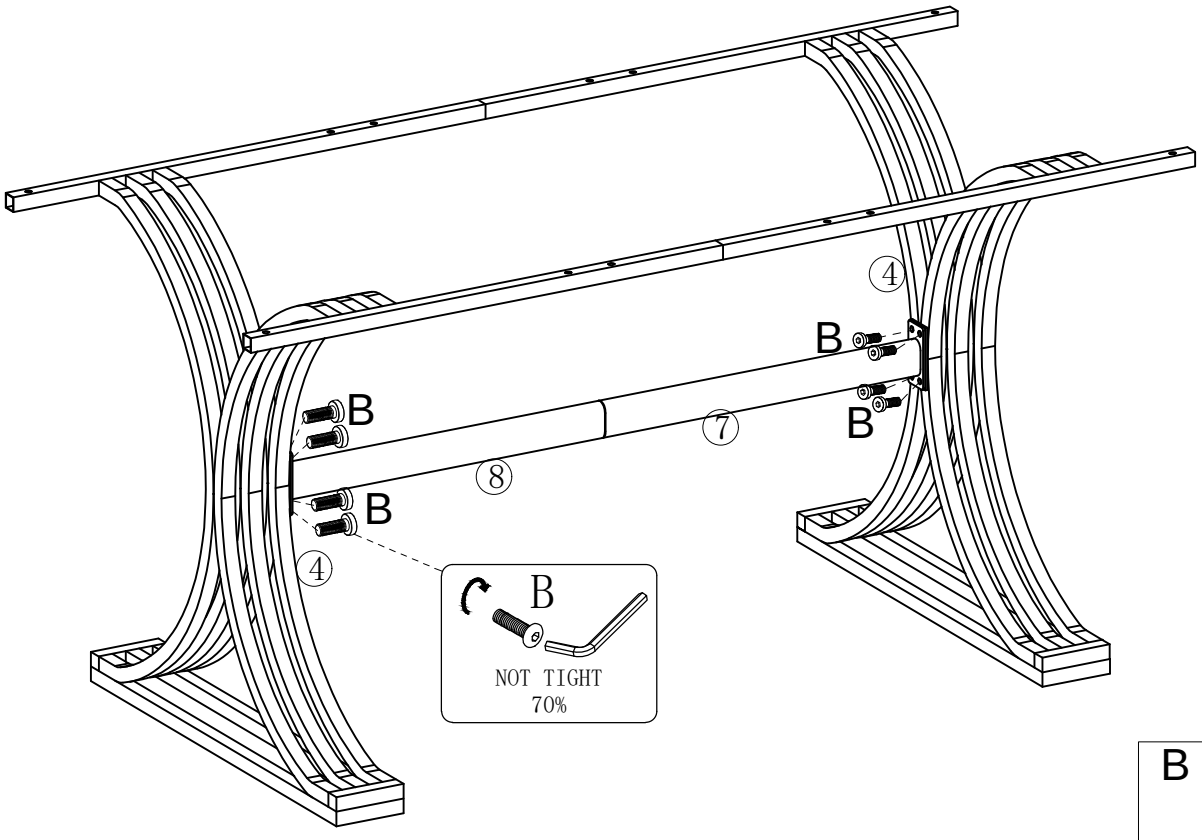

B M6×12mm

×8

7

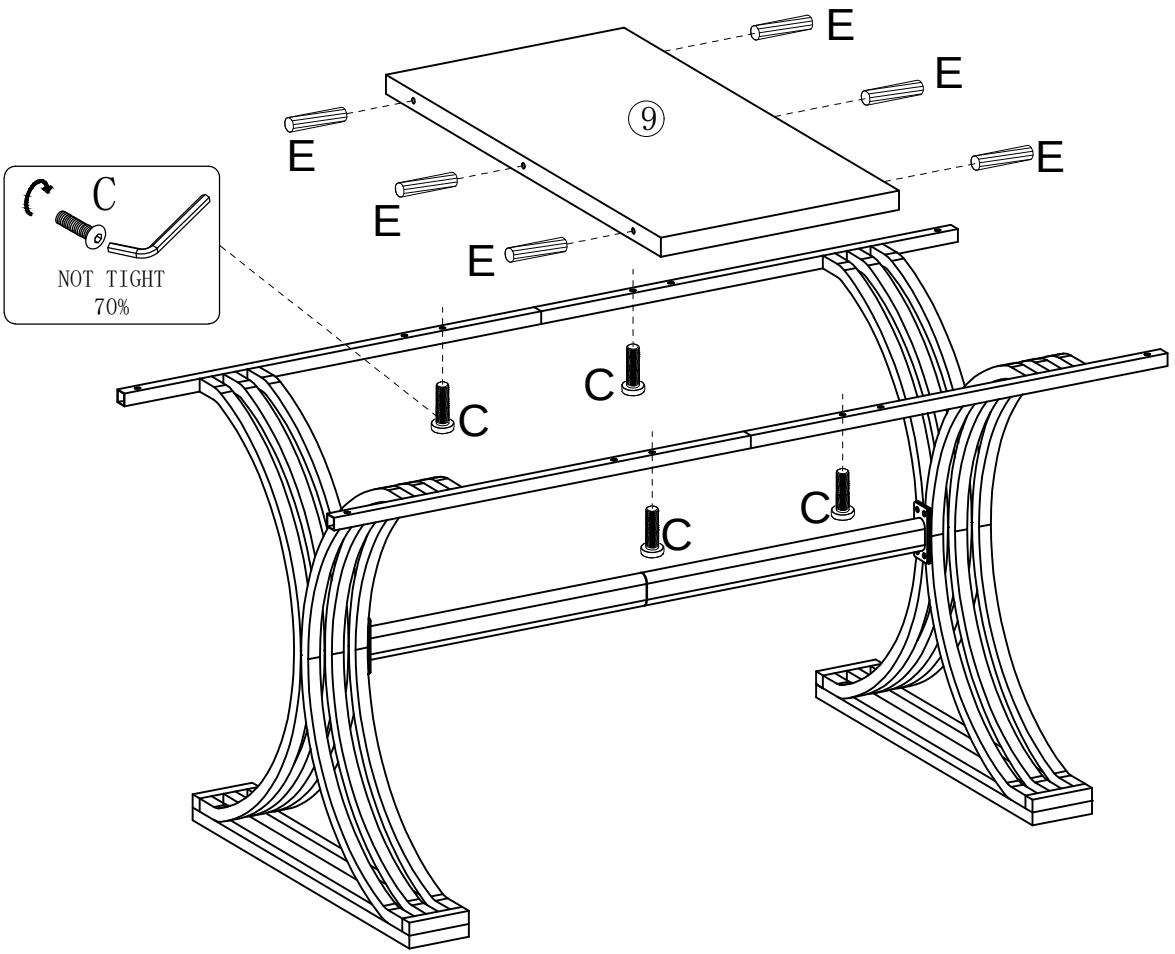

E 8×30mm

×6

C M6×30mm

×4

8

TIGHT ALL SMCREW 100%

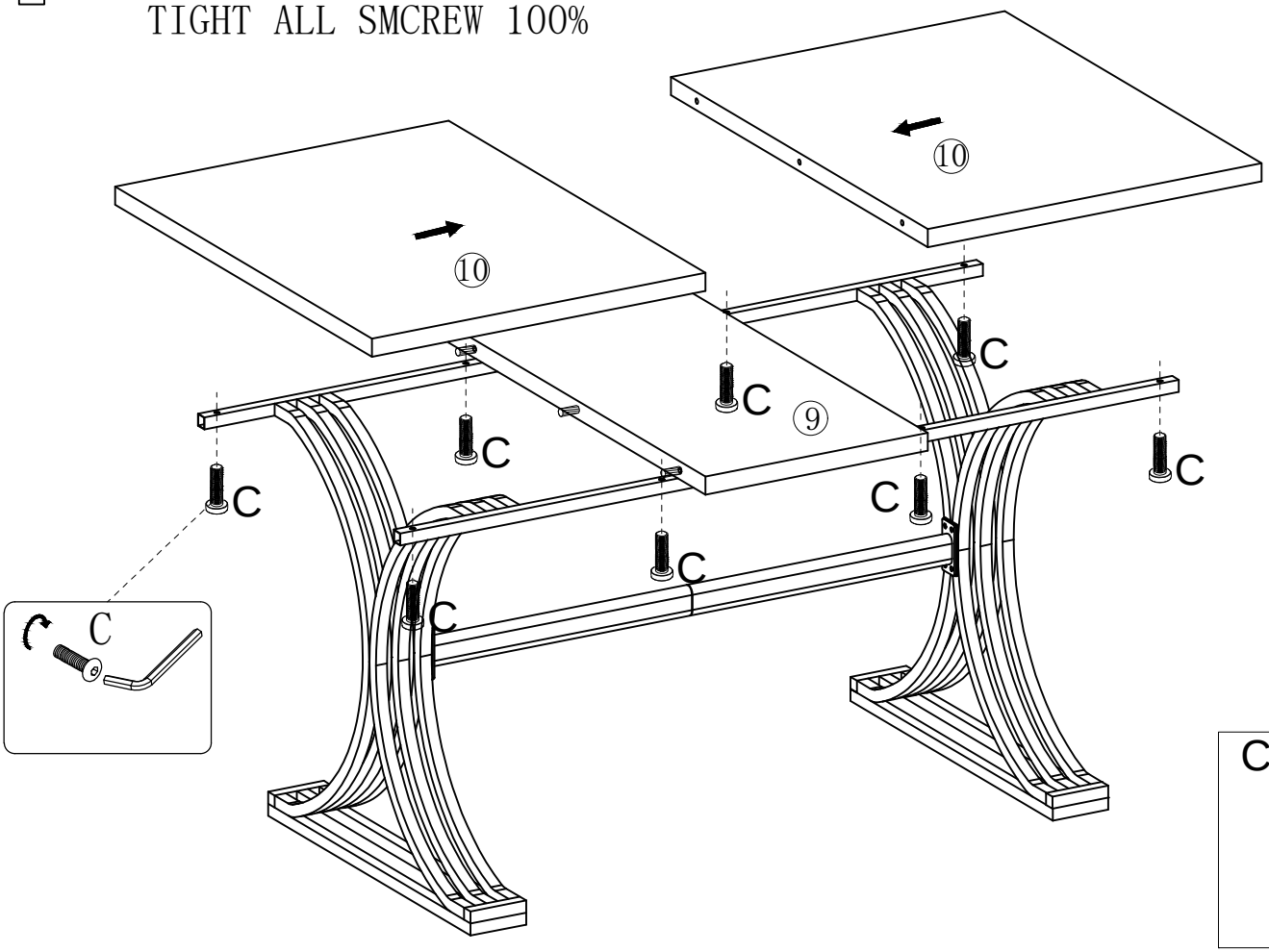

C M6×30mm

×8

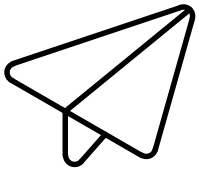

No heartburn, when we handle the return

Our way

- support@tribesigns.com
- Replacement/Refund
- You

Their way

- Re-package item
- Schedule pick-up
- Track package
- Replacement
- You

Contact our customer service team



support@tribesigns.com
www.tribesigns.com



1-424-220-6888