SKU #1013131885
Model #HD27BINBPS

USE AND CARE GUIDE

27 GALLON TOTE RACK WITH 4 INCH CASTERS

ESTANTE DE PORTÁTIL DE 27 GALONES CON RUEDAS DE 4 PULGADAS

Questions, problems, missing parts? Before returning to the store, call Customer Service
8 a.m. – 6 p.m., EST, Monday-Thursday, 8 a.m. – 5 p.m., EST, Friday

888-449-5520

WWW.HOMEDEPOT.COM



Bins NOT Included

THANK YOU

We appreciate the trust and confidence you have placed in HDX through the purchase of this 27 Gallon Tote Rack. We strive to continually create quality products designed to enhance your home. Visit us online to see our full line of products available for your home improvement needs. Thank you for choosing HDX!

Table of Contents

Ⓔ

Table of Contents 2
Note 2
Caution Warnings 2
Specifications 2
Helpful Hints 2
Accessory Parts List 3
Planing Installation 3
Assembly 4
Assembly (continued) 5
Assembly (continued) 6
Hardware contents 7

Note

Please dispose of loose, round plastic pieces and plastic post covers. These are used to separate the shelves and the posts for shipping purposes.

NOTE: Please dispose of loose, round plastic pieces and plastic post covers. These are used to separate the shelves and the posts for shipping purpose.

Caution Warnings

1. Two adults are recommended for ease of assembly. Use care when handling.
2. Do not allow children to climb or play in or around the shelves.
3. Assembly recommended on a soft surface, such as Carpet, to avoid scratching flooring finish
4. 5 tote capacity, designed for HDX 14G and HDX 27 G Storage tote, this product holds 50 lbs per tote.
5. Do not use anything other than 27 Gallon tote. Ensure the sides of the tote are properly secured before sliding in and out.

Specifications

Product width	22 in.
Product depth	28.5 in.
Product height	69 in.

Helpful Hints

1. Carefully read all instruction and caution warnings before beginning assembly.
2. Determine shelving heights prior to assembly to avoid dismantling for adjustment.
3. When placing the plastic tapered shelves onto the posts, slide tapered sleeves up or down on the post until you feel it “snap” into the lines or grooves of the post

Accessory Parts List

Part	Description	Quantity	Part	Description	Quantity
A	Upper / Lower Shelf 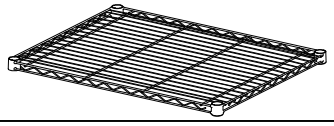	2	E	Sliding Rail 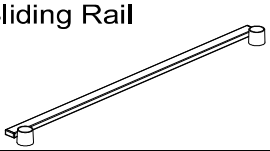	6
B	Top post 	4	F	Tie Support 	1
C	Middle post 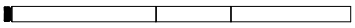	4	G	(44) Plastic tapered sleeves, (4) replacements 	48
D	Bottom post 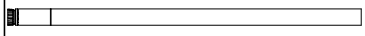	4	H	4” Casters 2-Locking 2-Non-locking 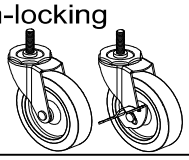	4

PLANNING INSTALLATION

Before you begin, you may choose to assemble the posts fully, but this is not required. These instructions show the post assembly.

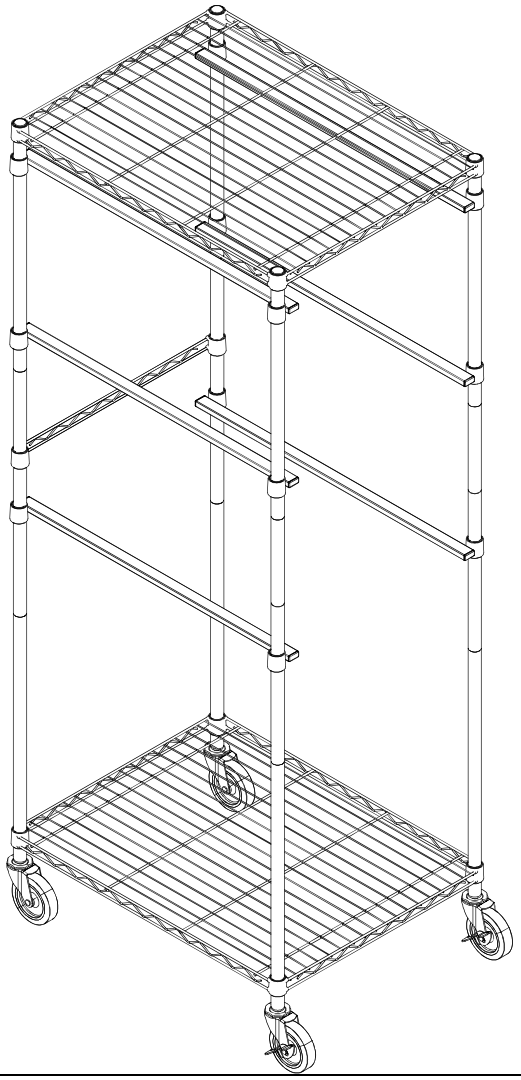

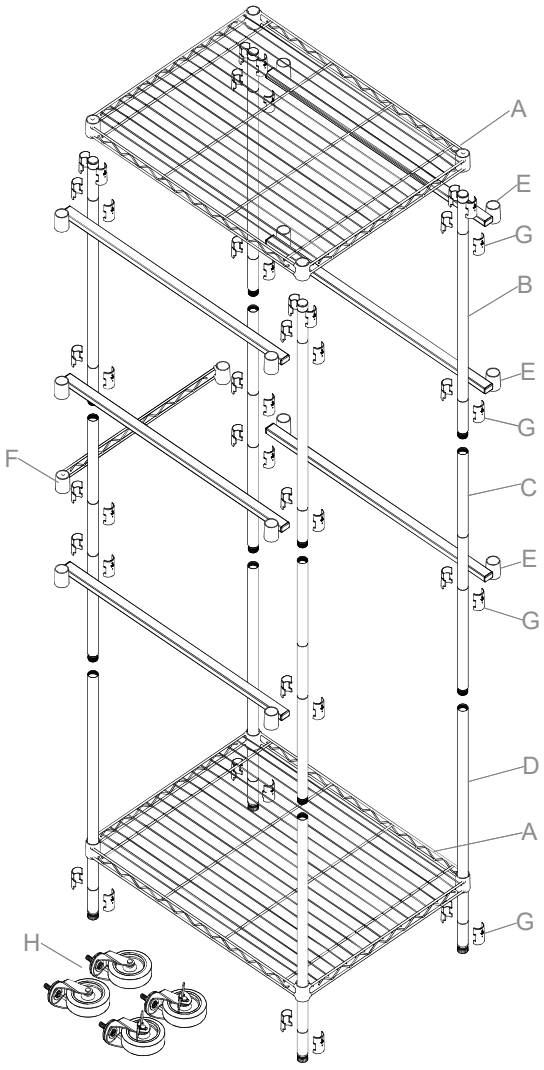

Assembly

1 Bottom Shelf Assembly

i. Locate the bottom post (D) of the bottom shelf (A).

ii. Insert eight plastic tapered sleeves (G) into the bottom post (D) groove, one in each post. Ensure tapered end is up. See arrow on lock.

iii. Place shelf on its side and slide each post with tapered sleeves through the bottom shelf until sung.

iv. After all posts are in place, positon the unit in the upright position.

v. Push down on each corner of the bottom shelf, ensuring that the shelf is in the fully locked position.

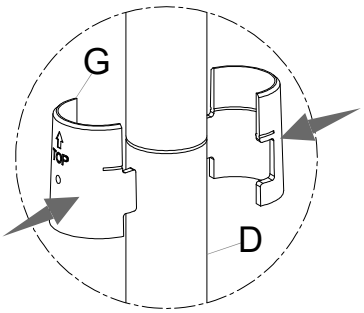

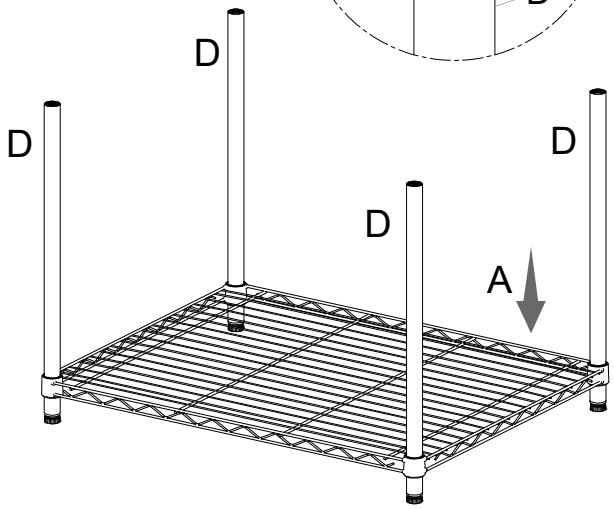

NOTE: The rubber mallet can be used to ensure the shelf is tight

2 Middle / Bottom Post Assembly

i. The middle post (C) section have the threaded post jointers are pre-installed for your convenience.

ii. Screw the posts (1 middle & 1 bottom) tightly together.

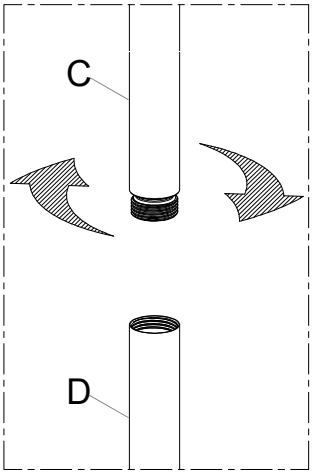

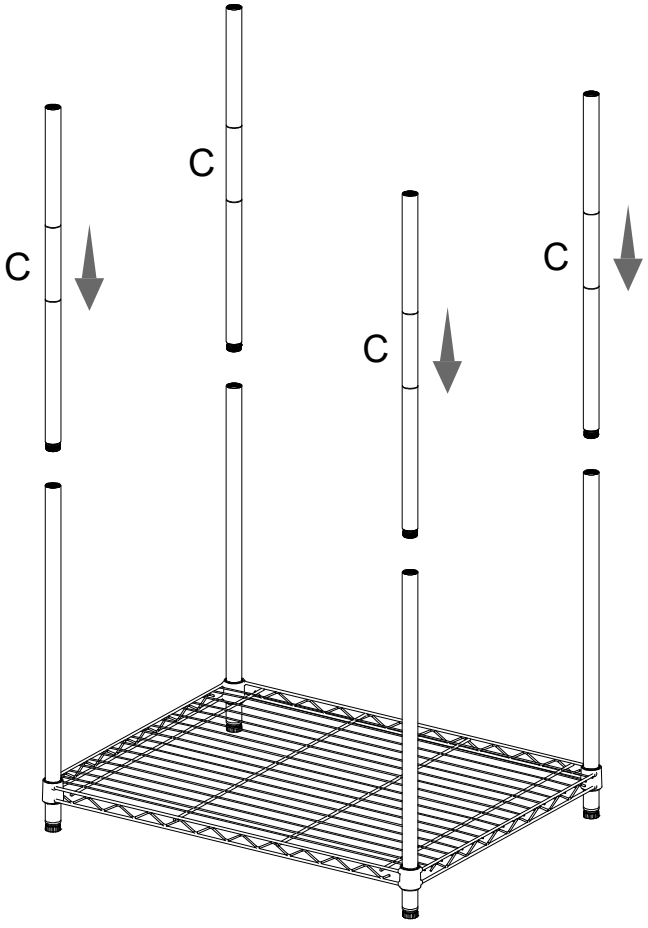

Assembly (continued) –

3 Sliding Rail assembly

i. Connect plastic tapered sleeves to the post grooves above those in step 1 and ensure they are of equal height.

ii. Place sliding rails (E) on each side and secure to a snug fit

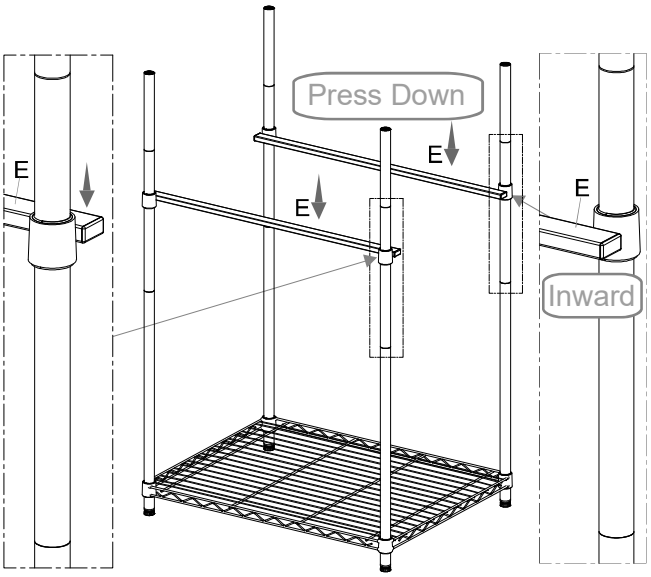

4 Tie Support assembly

i. Connect plastic tapered sleeves to the next set of post grooves.

ii. Slide tie support (F) over and secure to a snug fit.

NOTE: The two grooves at the top of the bottom-front posts are not used.

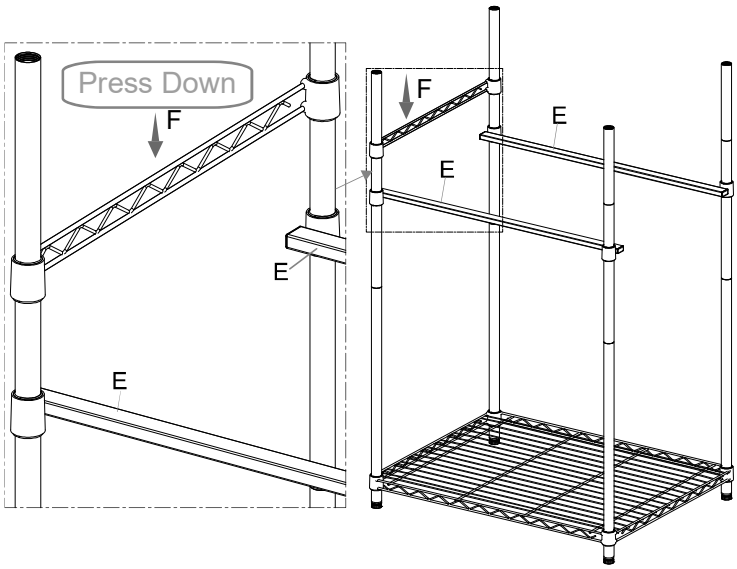

5 Assembly Top Post

i. The top post (B) section has a plastic endcap on one end and the other end has the threaded post jointers are pre-installed for your convenience.

ii. Screw the posts (1 top & 1 middle) tightly together.

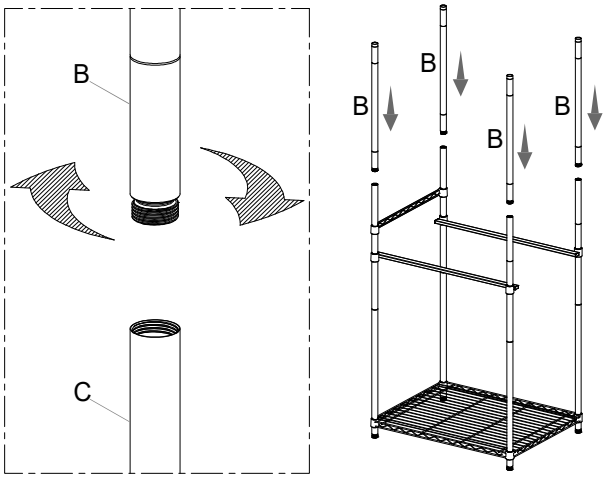

6 Sliding Rail assembly Again (Similar Step 3)

i. Connect plastic tapered sleeves to the post grooves above those in step 1 and ensure they are of equal height.

ii. Place sliding rails (E)on each side and secure to a snug fit.

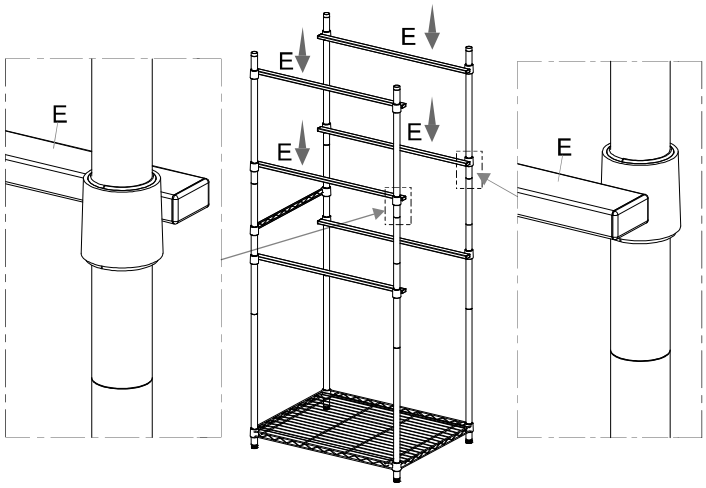

Assembly (continued) –

7 Top Shelf Assembly

i. Connect plastic tapered sleeves to the top of each post and ensure they are of equal height. Slide upper shelf over and secure to a snug fit.

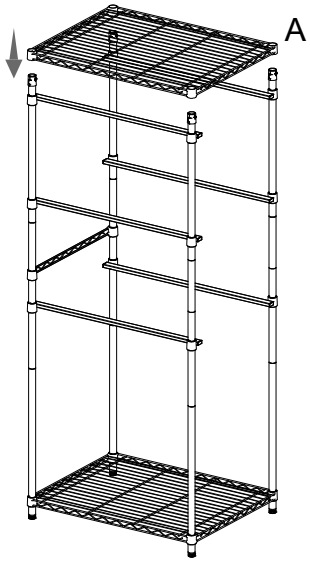

8 Leveling the unit

i. Adjust the foot levelers in or out at the bottom of the post (D) to attain proper leveling.

ii. Screw the pre-installed foot levelers clockwise or counterclockwise until the unit is level.

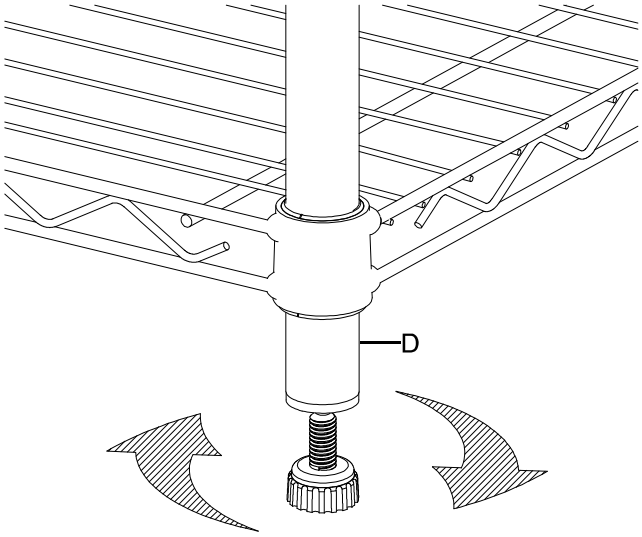

9 Caster Assembly

I Lay unit on its side. Use care to not scratch the unit. If necessary, lay the unit on a floor mat or flattened cardboard sheets. If casters are required, un-screw feet levelers from bottom poles, smooth side facing up. Screw in two locking casters (H) on one side of the unit and two non-locking casters (H) on the other side of the unit. pt.

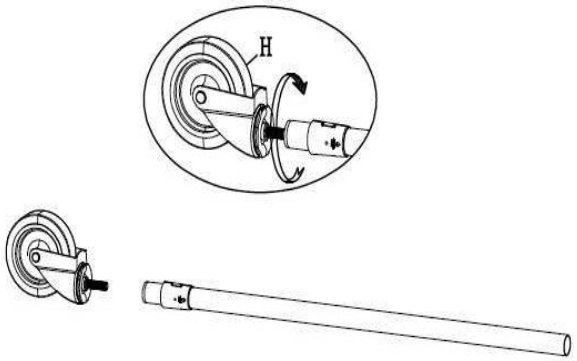

NOTICE: The tapered sleeves must be at the same height for each pole to ensure the shelf sits on the sleeves levelly.
NOTE: The post has a groove with a line marking. It can help to identify the height of the tapered sleeve in each post.

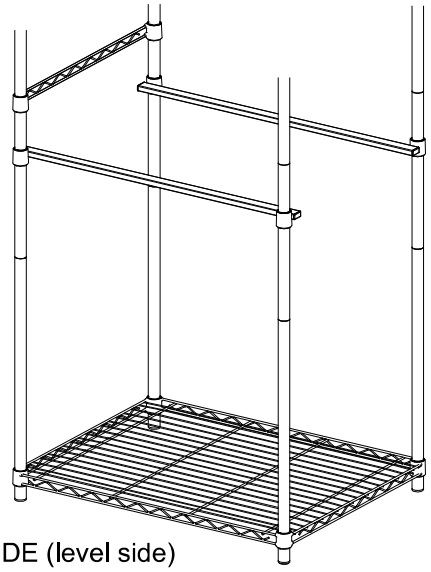

UPSIDE (level side)

HARDWARE CONTENTS

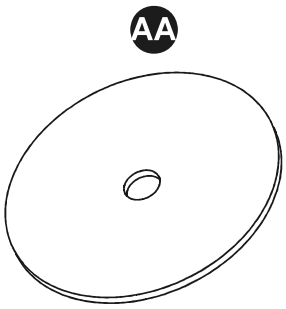

Washer
Qty. 2

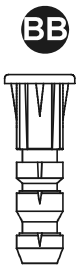

Plastic Anchor
Qty. 2



Screw
Qty. 2

To prevent the unit from tipping over, secure it to a wall in the following manner: Drill a hole in the wall using a 1/4 in. drill bit (not included). Insert the plastic anchor (BB) into the hole. Insert the screw (CC) through the washer (AA) then through the back of the top shelf wire and into the plastic anchor (BB) as shown. Be sure unit is secure and doesn't wobble or tip over.

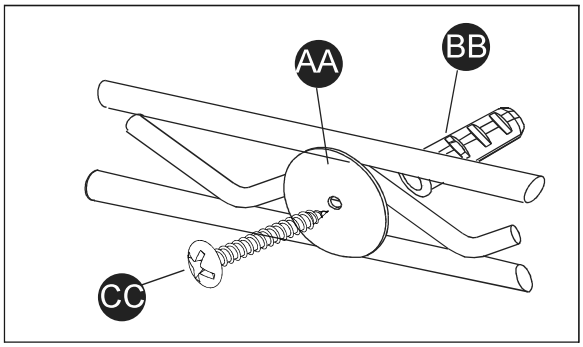

⚠WARNING

- **Unit must be placed on a level surface or leveled with included hardware (when applicable).**
- **Do not sit or stand on or allow children to climb, sit or stand on the assembled product.**
- **For safety reasons, it is imperative that this unit be mounted on the wall or floor.**
- **Unit can tip over causing severe injury or death.**
- **Do not exceed the recommended weight limits.**
- **Evenly distribute the weight on each level and always keep the heavier loads on the bottom.**
- **Before cutting, drilling or hammering into any wall or floor surface, verify the location of electrical, plumbing and gas lines. Cutting may cause serious injury.**

HDX™

Questions, problems, missing parts?
Before returning to the store call
Customer Service
8 a.m. - 6 p.m., EST, Monday-Thursday
8 a.m. - 5 p.m., EST, Friday

888-449-5520
WWW.HOMEDEPOT.COM
Retain this manual for future use.