Item Number: RBZUI2UO68P388

WARNING (To reduce the risk of fire, electric shock, or personal injury):

1. We suggest installation by a **licensed electrician**.
2. Please read the instruction carefully and save it as you may need it at a later time.
3. Before you start, **NEVER** attempt any work without shutting off the electricity until the work is done.
   - » Go to the main fuse, or circuit breaker, box in your home. Place the main power switch in the "**OFF**" position.
   - » Place the wall switch in the "**OFF**" position.
4. Mounting surface should be clean, dry, flat, strong enough and 1/4" larger than the canopy on all sides. Any gaps between the mounting surface and canopy exceeding 3/16" should be corrected as required.
5. Make sure that the ceiling or wall can stand the weight of the lamp before installation.
6. Make sure the voltage you are using is **120V**. The maximum wattage is **Type B, Max 40W** per bulb.
7. Keep the lamp away from acidic and alkaline substances in case of damaging the surface of the lamp.
8. When replacing bulbs, you should turn off or unplug the lamp and you must wait until it is cool as bulbs get hot quickly.
9. The safety instructions appearing in this manual are not meant to cover all possible conditions that may occur. It must be understood that common sense, caution and care must be used with any electrical products.

IMAGE FOR FINISHED PRODUCT:

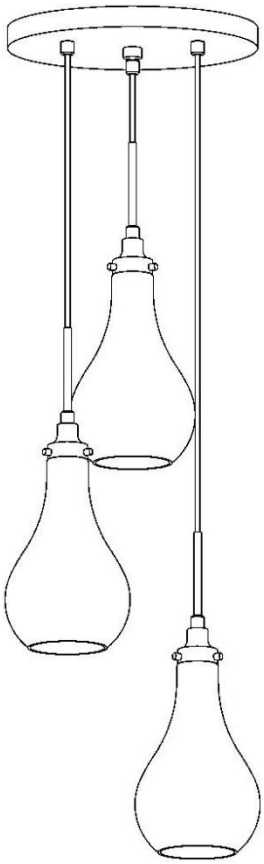

TOOLS REQUIRED (NOT INCLUDED):

Before starting assembly and installation please prepare the needed tools as below picture

		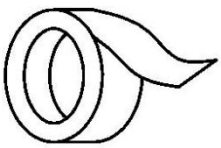	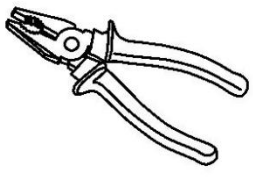	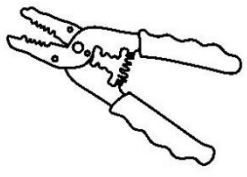
Ladder	Philips Head or Flat Blade Screwdriver	Electrical Tape	Pliers	Wire Cutter/Stripper

PARTS TYPE & QTY INCLUDING:

(C) Single bar (1)
(D) Green ground screw (1)
(E) Canopy (1)
(F) Strain relief (5)
(G) Hex nut (1)
(H) Cap nut (1)
(I) Cord (3)
(J) Socket cup (3)
(K) Screw (9)
(L) Socket (3)
(M) Glass shade (3)

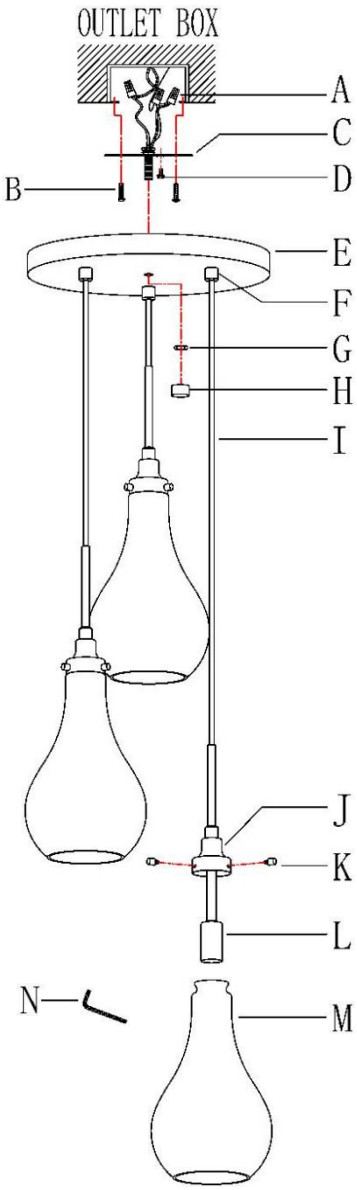

ACCESSORIES & QTY ENCLOSED:

(A) Plastic Wire Connector (3)
(B) Mounting screw (2)
(N) Allen wrench (1)

ASSEMBLY & INSTALLATION INSTRUCTIONS:

1. Carefully remove the fixture from the carton and check that all parts and accessories are included as shown in the above illustration.

2. Turn off power
Before you start the installation, NEVER attempt any work without shutting off the electricity until the work is done.

» Go to the main fuse, or circuit breaker, box in your home. Place the main power switch in the "**OFF**" position.
» Place the wall switch in the "**OFF**" position.

3 » Unscrew hex nut (G) and cap nut (H) from single bar (C).

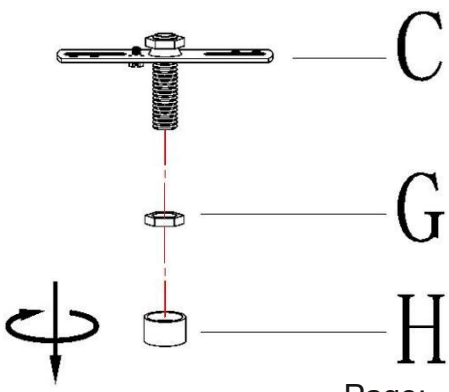

4 » Adjust the length of cords (I) to achieve the desired height of the mounted fixture.

1) Use Allen wrench (N) to unscrew the screws in strain reliefs (F), carefully pull and push cords (I) through canopy (E) and strain reliefs (F) to lengthen or shorten the length of cords (I).

2) Once the desired height of fixture is achieved, carefully tighten the screws till snug.

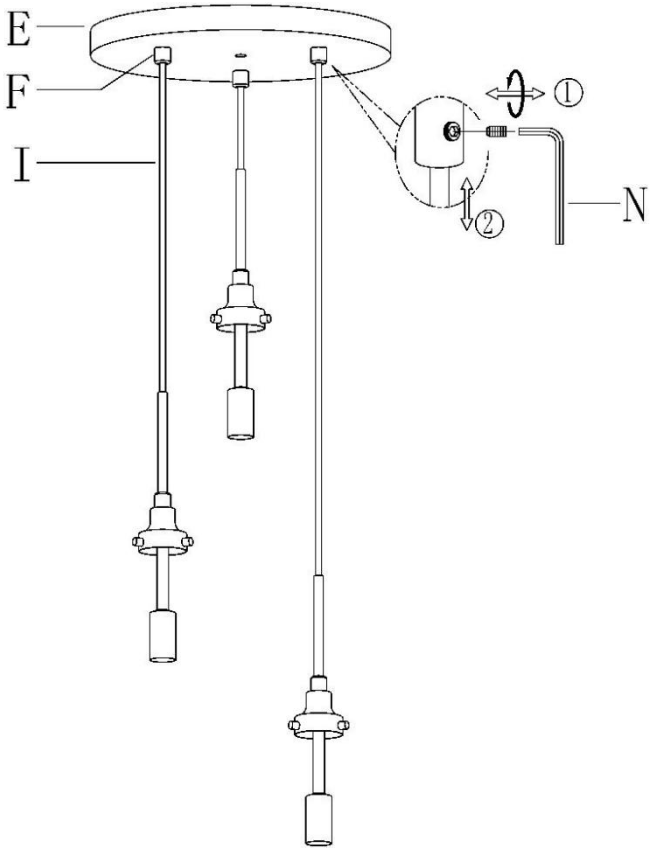

5 » If needed, shorten the extra length of the fixture wires from cord (I) so that they all are at least 6 inches (152.4 mm) long above canopy (E) within the outlet box.

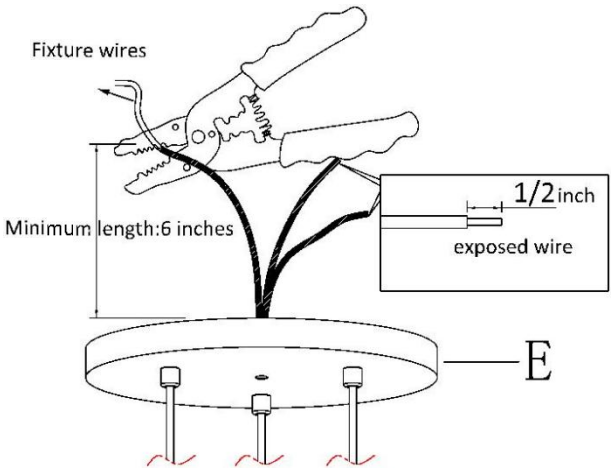

6 » Secure single bar (C) to the outlet box with mounting screws (B).

NOTE: the side of single bar (C) marked "GND" must face out.

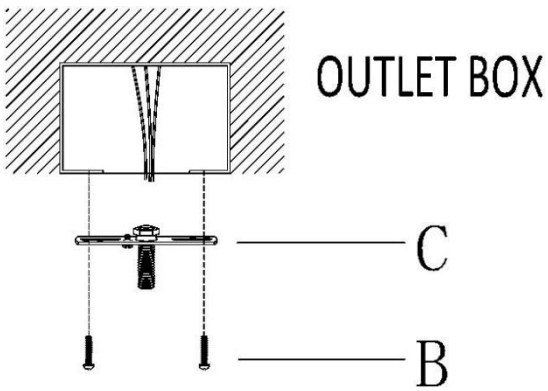

7 » Make wire connections

Connect wires as below wires connection shown. ***REFER TO THE FOLLOWING CHARTS, NEVER CONNECT OTHER WIRES TO GROUND WIRES.***

Connect ground wires according to the below chart

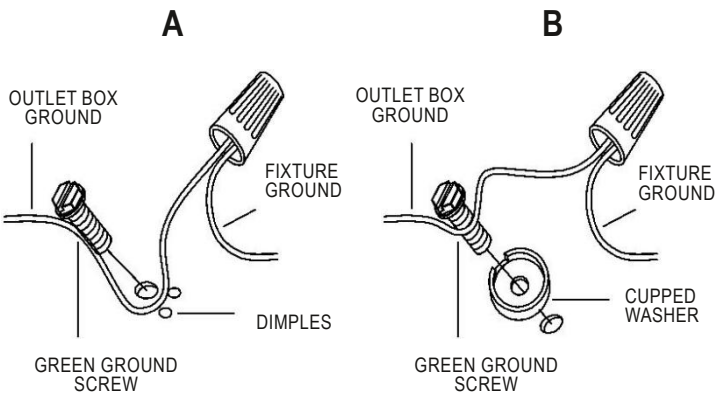

Connect wires according to the below chart

Connect Black or Red Supply Wire to:	Connect White Supply Wire to:
Black	White
*Parallel cord (round & smooth)	*Parallel cord (square & ridged)
Clear, Brown, Gold or Black without tracer	Clear, Brown, Gold or Black with tracer
Insulated wire(other than green) with copper conductor	Insulated wire(other than green) with silver conductor

* Note: When parallel wires (SPT I& SPT II) are used. The neutral wire is square shaped or ridged and the other wire will be round in shape or smooth (see illus.)

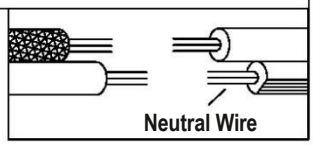

- ***Twist wires together with plastic wire connector (A) until tightly joined.***
- ***Wrap each connector with approved electrical tape for a more secure connection,***
- ***Carefully tuck all wires into the outlet box.***

8 » Raise canopy (E) to the ceiling and secure canopy (E) in place by tightening hex nut (G) and cap nut (H) onto the preassembled threaded nipple on single bar (C).

NOTE: The canopy (E) should be snug against the ceiling and cap nut (H).

If not, adjust the threaded length of the pre-assembled threaded nipple on single bar (C):

- ***Unscrew the pre-assembled hex nut.***
- ***Screw the pre-assembled threaded nipple in or out of single bar (C).***
- ***When the secure length is achieved, tighten the pre-assembled hex nut and back to step 8.***

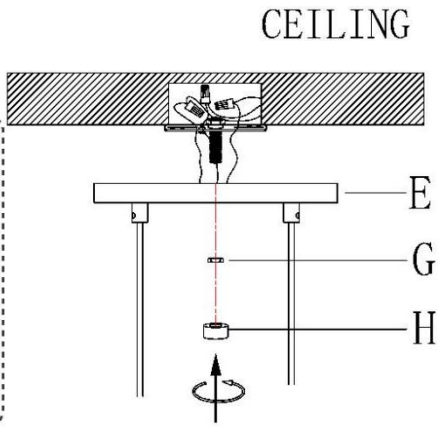

9 » 1) Install bulbs (Not included) (Please do not exceed the maximum wattage recommended on the socket.)

2) Remove screws (K) from socket cups (J).

3) Carefully align glass shades (M) and socket cups (J).

4) Secure glass shades (M) with screws (K).

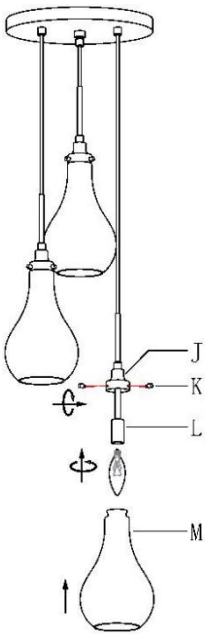

10. Check everything is already installed properly, then you could turn on the light. Enjoy!

ORDERING PARTS

Keep this sheet for future reference in case you need to order replacement parts. All parts for this fixture can be ordered from the place of purchase. Be sure to use exact wording from illustration when ordering parts.

CLEANING

To clean, wipe the fixture with a soft cloth. Clean glass with a mild cleaner (such as mild and non-abrasive soap). Do not use abrasive materials such as scouring pads or powders, steel wool or abrasive paper.