Comfort Park Ave Bench
8 FT
Assembly Instructions

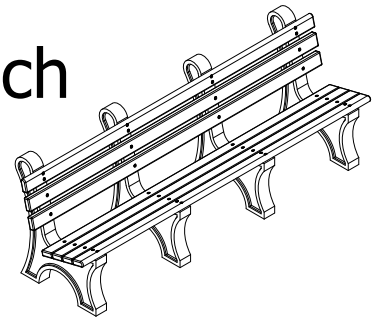

Tools for Assembly: Powered Driver, Ratchet & 7/16 Socket

Components

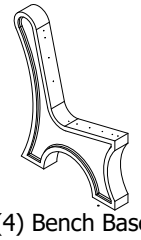

(4) Bench Bases

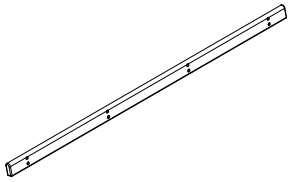

(2) Bullnose Slats

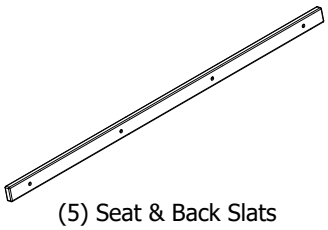

(5) Seat & Back Slats

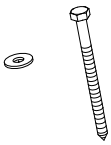

(36) Hex Lag Screws
(36) Flat Washers

Step by Step Assembly

Before you begin: Check components to verify all are included. Assembly will require two people and must be performed on a level and smooth surface. Do not overtighten hardware as damage can occur.

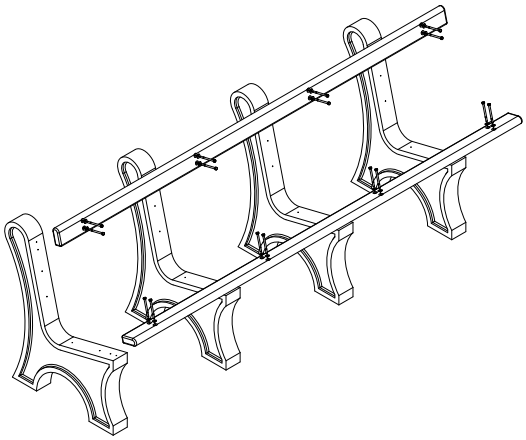

Illustration 'A'

Step 1

With two people, position bench bases upright and parallel to each other. Align the front bullnose slat (2 holes) with the pre-drilled holes in each bench base. Attach using hex lag screws and flat washers. Repeat for upper bullnose slat, See Illustration 'A'.

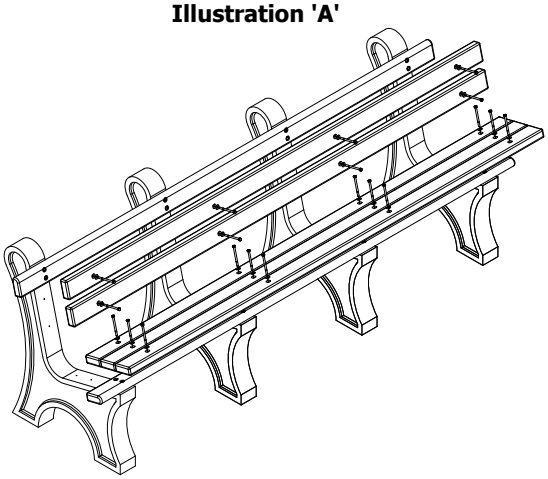

Illustration 'B'

Step 2

Align seat board holes with pre-drilled holes in bench bases, attach using hex lag screws and flat washers. Repeat for remaining seat and back slats, See illustration 'B'. Ensure all hardware is tight, but do not over-tighten.

Cleaning Tips

Frog Furnishings products are durable and designed to last a lifetime, like most things that spend the majority of time outdoors, sometimes they need a little cleaning. In most cases, all a Frog product requires is mild dish soap, a bucket of warm water and a clean cloth. Apply the soapy mixture to scrub away the dirt and then rinse with water. If you have some stubborn dirt down in the grooves and divots, mix 1 part bleach to 2 parts water, apply with your clean cloth, scrub with a soft bristle brush if needed and then rinse.

As of 08/2019