GLACIER BAY®

USE AND CARE GUIDE

APRON FRONT STAINLESS STEEL KITCHEN SINK

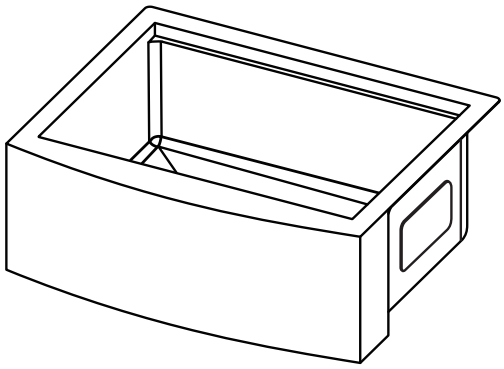

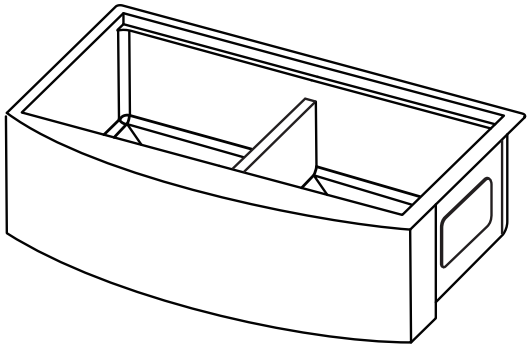

Model#ACS3322A2Q-WB
Model#ACS3322A1Q-FWB
Model#ACS3322A2Q-FWB

Questions, problems, missing parts? Before returning to the store,
call Glacier Bay Customer Service
8 a.m. – 7 p.m., EST, Monday-Friday, 9 a.m. – 6 p.m., EST, Saturday

1-855-HD-GLACIER

HOMEDEPOT.COM/GLACIERBAY

THANK YOU

We appreciate the trust and confidence you have placed in Glacier Bay through the purchase of this kitchen sink. We strive to continually create quality products designed to enhance your home. Visit us online to see our full line of products available for your home improvement needs. Thank you for choosing Glacier Bay!

Pre-Installation (continued)

PACKAGE CONTENTS

Model#	Bowls	Picture	Package Contents
ACS3322A2Q-WB	Double	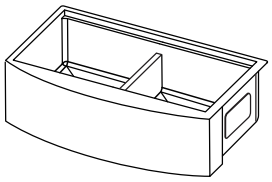	. Sink . Mounting Hardware . Strainer x2 . Bottom Grid x2 . Roll Mat . Colander . Cutting Board . Towel
ACS3322A1Q-FWB	Single	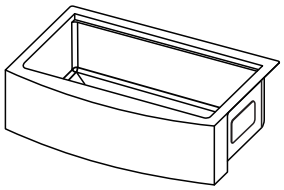	. Sink . Mounting Hardware . Strainer . Bottom Grid . Roll Mat . Colander . Cutting Board . Towel . Faucet
ACS3322A2Q-FWB	Double	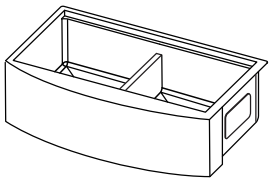	. Sink . Mounting Hardware . Strainer x2 . Bottom Grid x2 . Roll Mat . Colander . Cutting Board . Towel . Faucet

Pre-Installation (continued)

PACKAGE CONTENTS

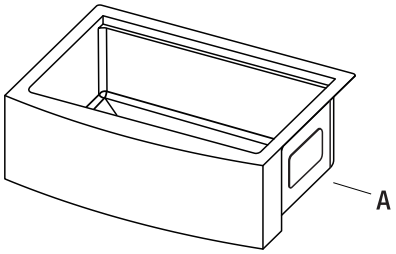

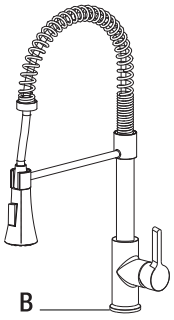

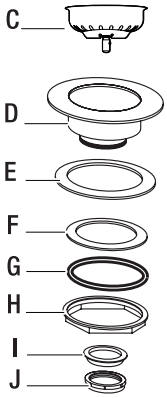

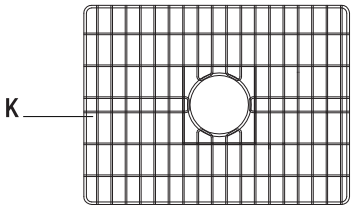

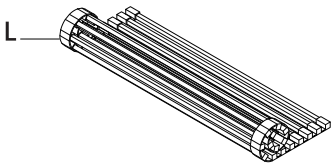

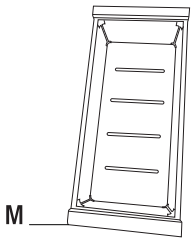

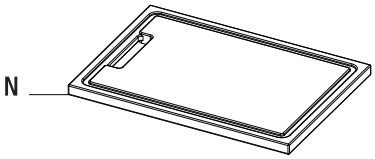

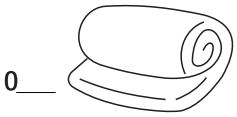

Part	Description
A	Sink
B	Faucet
C	Stainer basket
D	Stainer bowl
E	Stainer ring
F	Paper washer
G	Rubber washer
H	Locknut
I	Plastic joint
J	Connecting nut
K	Bottom grid
L	Roll mat
M	Colander
N	Cutting board
O	Towel

GLACIER BAY®

Questions, problems, missing parts? Before returning to the store,
call Glacier Bay Customer Service
8 a.m. – 7 p.m., EST, Monday-Friday, 9 a.m. – 6 p.m., EST, Saturday

1-855-HD-GLACIER

HOMEDEPOT.COM/GLACIERBAY

Retain this manual for future use.