WARRANTY

WHAT IS COVERED

We warrant the product to be free from defects in material or workmanship for a period of one year from the date of original retail purchase. The word “defects” is defined as imperfections that impair the use of the product. Defects resulting from misuse, abuse or customer negligence will void this warranty.

WHAT IS NOT COVERED

This warranty does not cover commercial use, hardware, acts of nature, fire, freezing and abusive use. This warranty does not cover defects due to alteration or accidents. This warranty does not cover scratches, scuffs or other cosmetic damages that may result from normal use of the product.

CARE INSTRUCTIONS

Thank you for choosing northbeam™ BERLIN BISTRO WINE RACK. With a little care and maintainance, the northbeam™ BERLIN BISTRO WINE RACK will provide you with comfort and enjoyment for many years to come!

- To clean panels, use clean water on a damp cloth.
- When assembling northbeam™ BERLIN BISTRO WINE RACK, please handle all the panels and/or hardware with care to avoid any possibilities of damages and/or injuries.

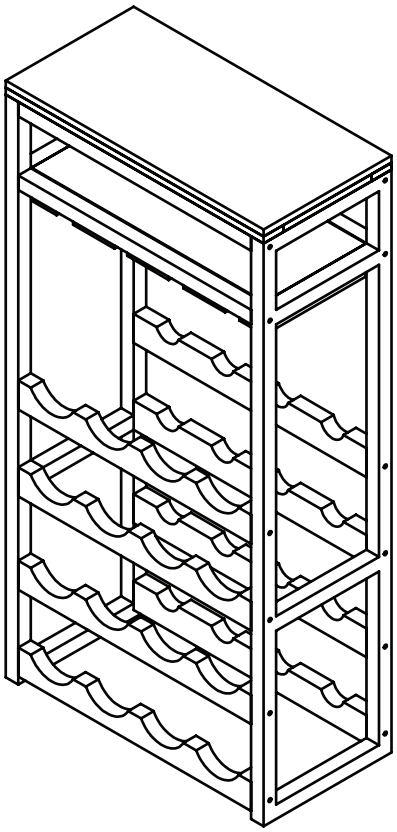

NOTE: Please read all instructions carefully before starting assembly.
Also, we recommend that the unit is fully assembled on a level surface.
Two people are recommended to assemble this product.
DO NOT over torque screws and bolts.

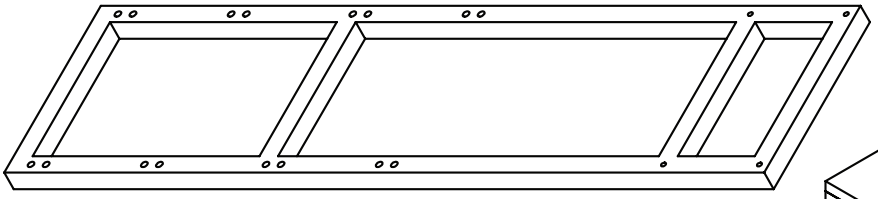

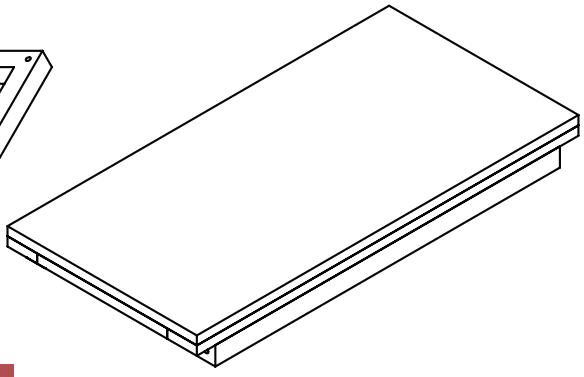

1 LEGS X **2PCS**

2 UPPER PANEL X **1PC**

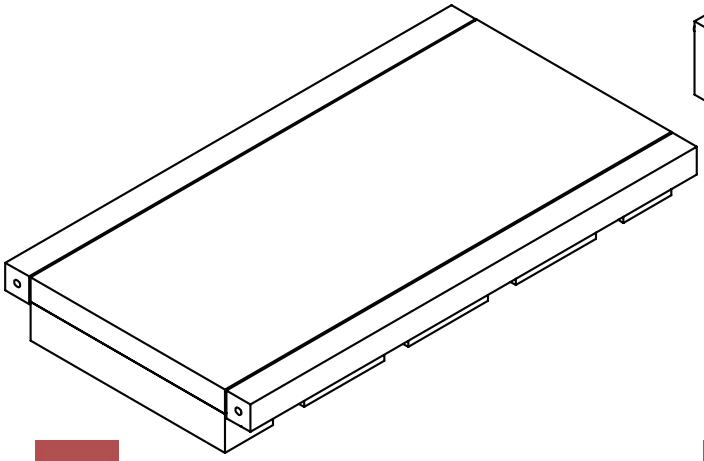

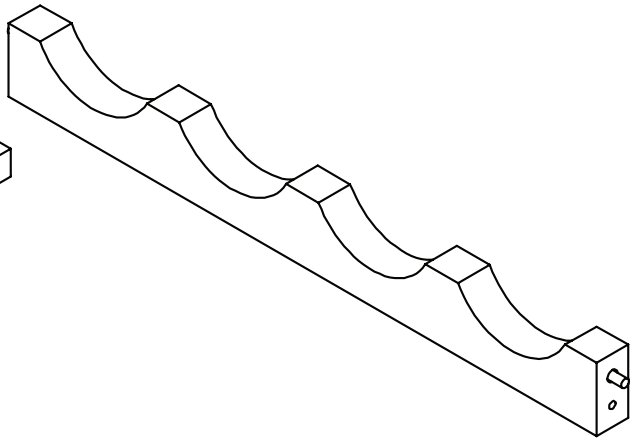

3 MIDDLE PANEL X **1PC**

4 BACK CROSS BARS X **4PCS**

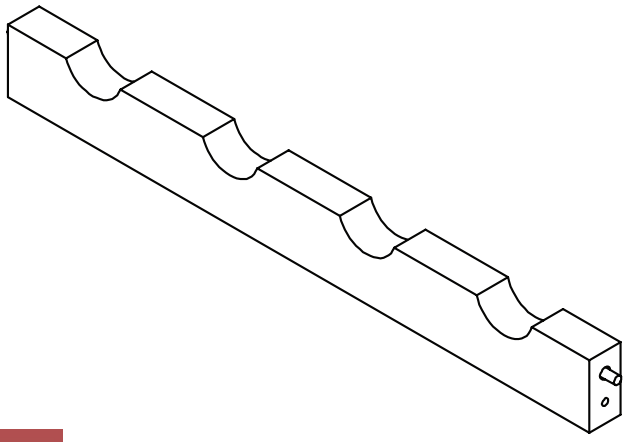

5 FRONT CROSS BARS X **4PCS**

NOTE: Please read all instructions carefully before starting assembly.
Also, we recommend that the unit is fully assembled on a level surface.
Two people are recommended to assemble this product.
DO NOT over torque screws and bolts.

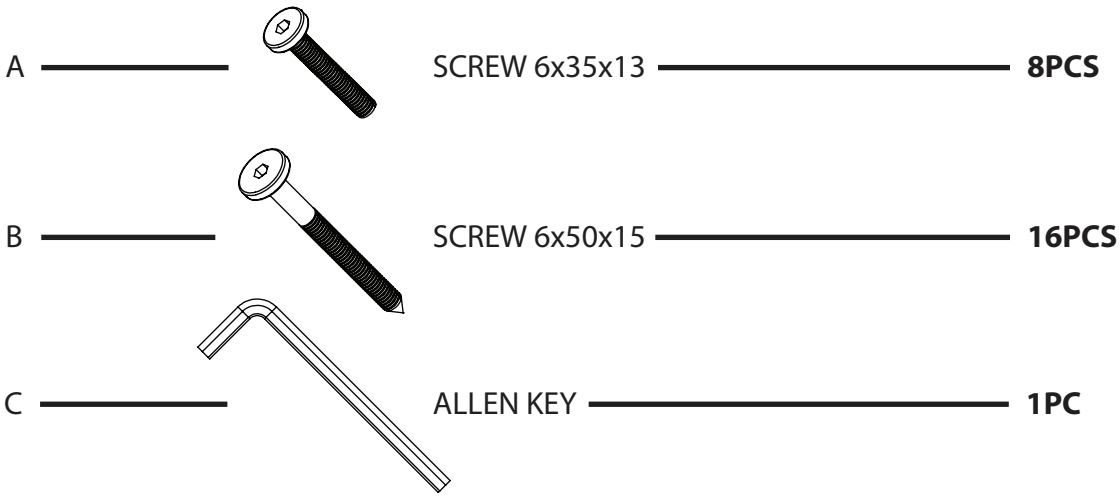

NOTE: Please read all instructions carefully before starting assembly.
Also, we recommend that the unit is fully assembled on a level surface.
Two people are recommended to assemble this product.
DO NOT over torque screws and bolts.

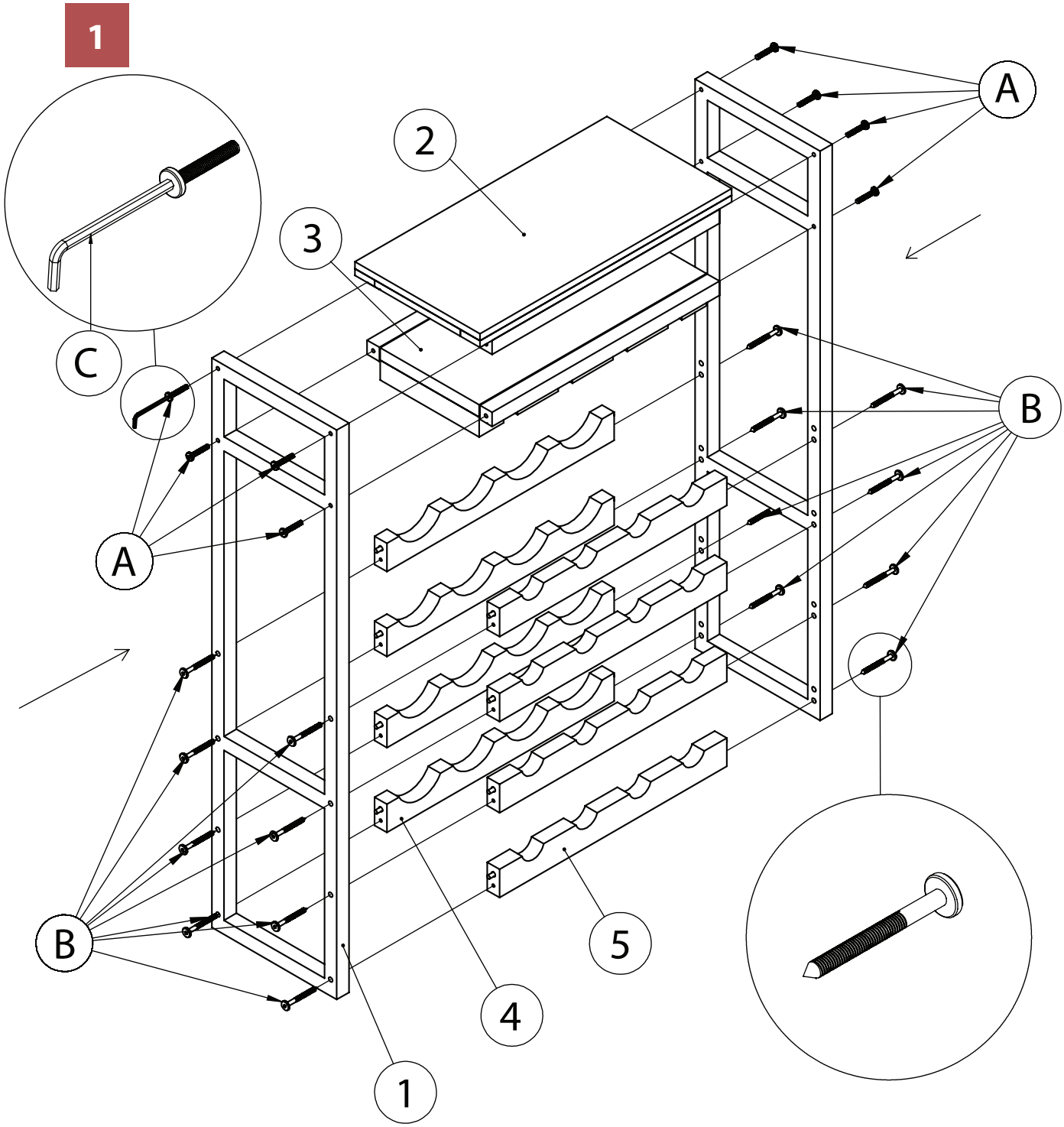

NOTE: Please read all instructions carefully before starting assembly.
Also, we recommend that the unit is fully assembled on a level surface.
Two people are recommended to assemble this product.
DO NOT over torque screws and bolts.

2

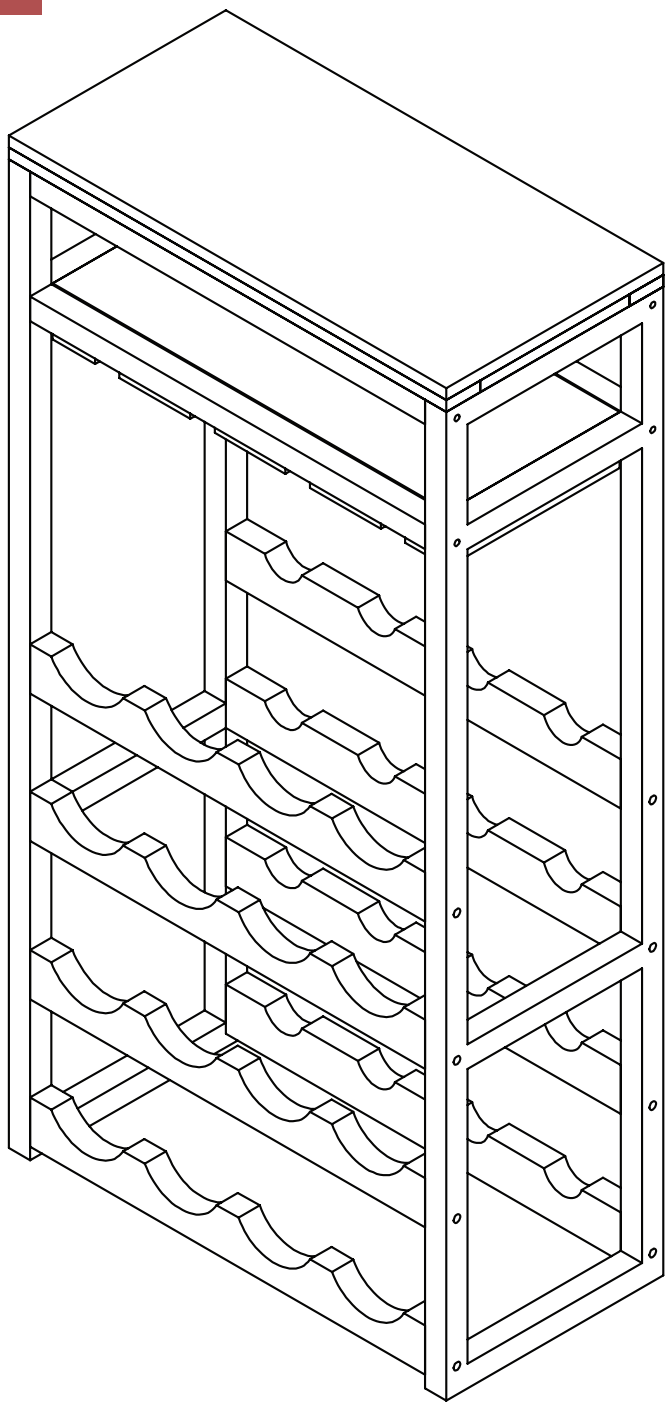

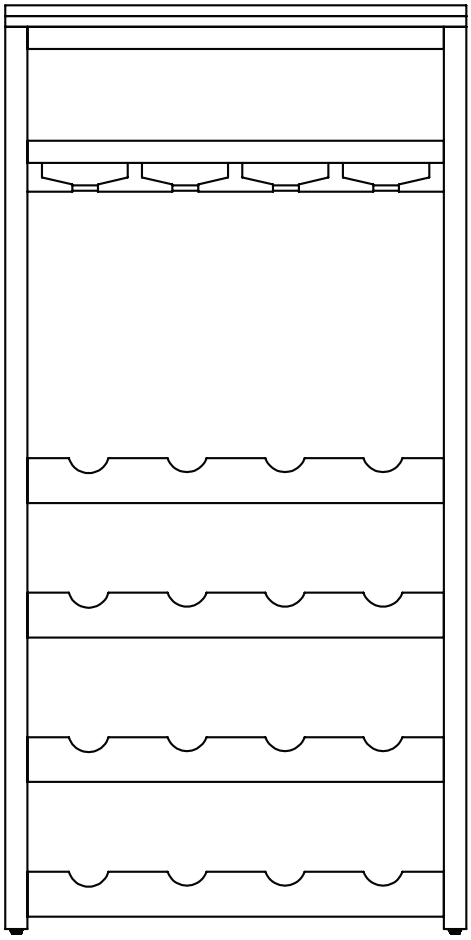

NOTE: Please read all instructions carefully before starting assembly.
Also, we recommend that the unit is fully assembled on a level surface.
Two people are recommended to assemble this product.
DO NOT over torque screws and bolts.

Please check contents before assembly. If any items are missing or damaged, do not take the unit back to the store. Call (775) 629-5029 or email: service@merryproducts.com for customer service and we will save you time by correcting any problems directly for you.

NOTE: Please read all instructions carefully before starting assembly. Also, we recommend that the unit is fully assembled on a level surface. Two people are recommended to assemble this product. DO NOT over torque screws and bolts.