WOODBRIDGE®

B0033/BTS1610
B0031 BTS1607

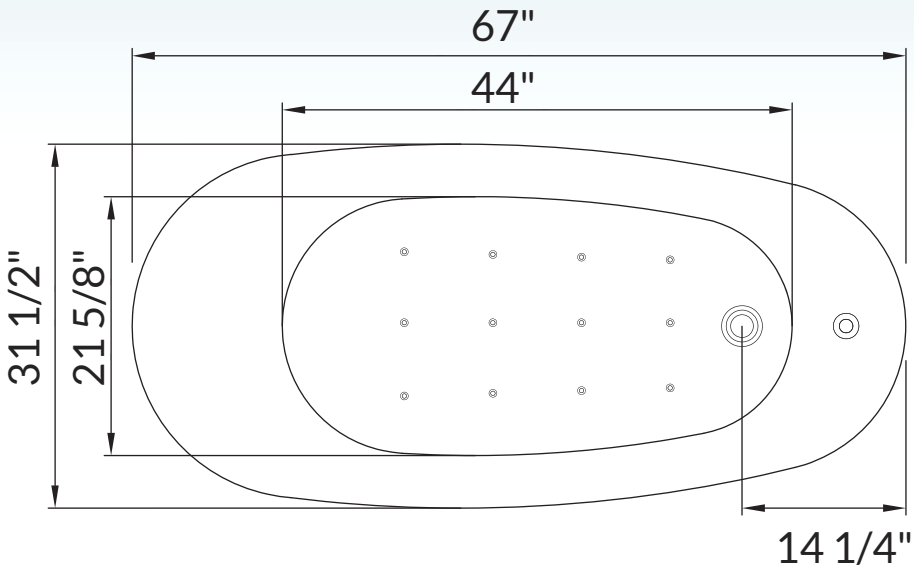

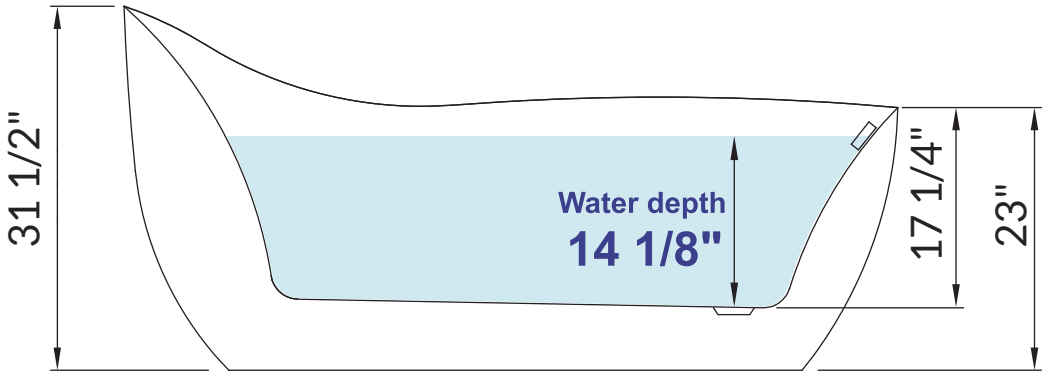

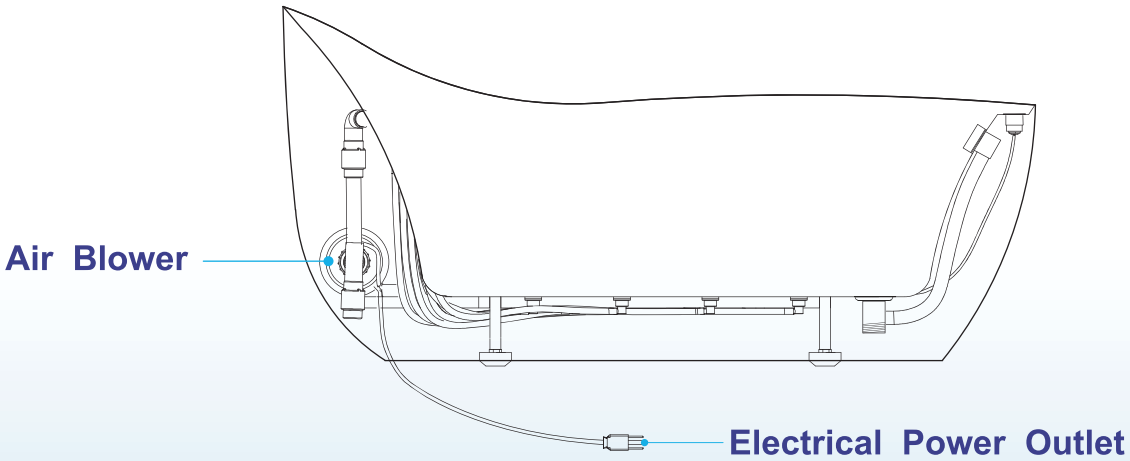

IMPORTANT INFORMATION

- Measurements are ± 1/2" and subject to change without notice
- Specifications & Configurations are subject to change without notice
- Please measure tub on-site before installation
- Please note that installer(s) must be certified or warranty will be voided
- Measurements herein supersede all others published prior to purblication date shown below
- Before ordering or installing, please consider future access to equipment