EUHOMY

CIM004-150
COMMERCIAL ICE MAKER

User Manual

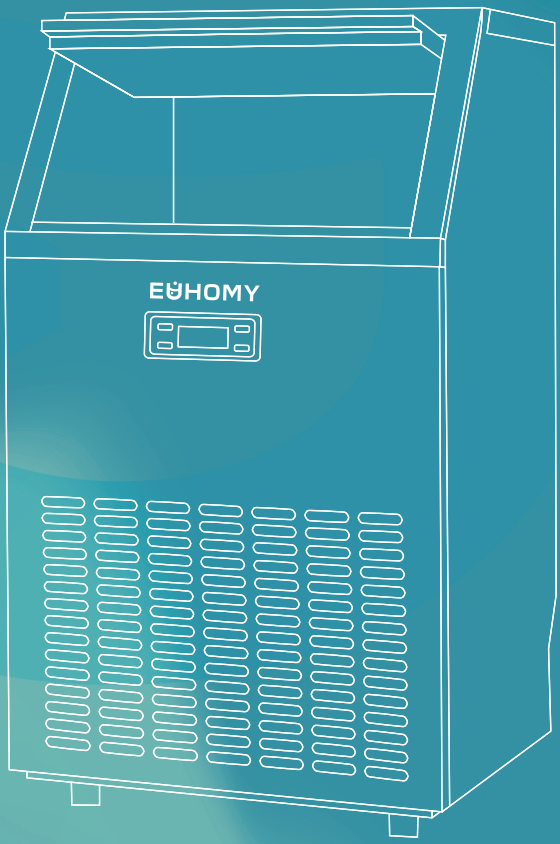

support@euhomy.com https://euhomy.com 1-833-362-2655(US)

THANK YOU

for purchasing the Euhomy ice maker

Scan the QR code using a mobile device

ACTIVATE YOUR WARRANTY

https://euhomy.com/pages/activate-warranty

RECORD THIS INFORMATION

Model Number *CIM004-150*

Serial Number _____

Date of Purchase _____

Store of Purchase _____
(Keep receipt)

TIP

Check the back or side of the machine for the serial number on the nameplate.

For ice maker, it's usually on the bottom or side. If you can't find it, don't worry — it won't affect your warranty registration.

CUSTOMER SERVICE

1-833-362-2655(US)

support@euhomy.com

https://euhomy.com

JOIN US

euhomyofficial

EuhomyOfficial

Euhomy_global

euhomy

SCAN HERE to share tips, get support,and connect with fellow enthusiasts!

Contents

Important Safety Instructions	01
Key Components And Structure	04
Detailed Component Descriptions	05
Getting To Know Your Ice Maker	06
Installation Guide	08
Cleaning Your Ice Maker before Using For the First Time	11
How To Operate The Ice Maker	12
Preparing Your Ice Maker For Long-Term Storage Or Relocation	14
Clean Your Ice Maker	15
FAQs	17
Troubleshooting	20
Specifications	22
Warranty Policy	23

IMPORTANT SAFETY INSTRUCTIONS

Read and review the instructions to understand the operation and use of the product.

Indicates the presence of a hazard that can cause personal injury, death, or substantial property damage if the warning included with this symbol is ignored.

Avoid contact with hot surfaces. Always use hand protection to avoid burns.

For indoor and household use only.

⚠ WARNINGS

Failure to follow these instructions could result in electric shock, fire or burn hazard, which could cause property damage, personal injury, or death. When using electrical appliances, basic safety precautions should always be followed, including the following:

1. This appliance can be used by persons with reduced physical, sensory, or mental capabilities or lack of experience and knowledge if they have been given supervision or instruction concerning use of the appliance in a safe way and understand the hazards involved.

2. Keep the appliance and its cord out of reach of children. **DO NOT** allow the appliance to be used by children. Close supervision is necessary when used near children.

3. Children should not play with the appliance.

4. The ice maker must be installed according to the installation instructions provided before use. Ensure the appliance is placed on a stable, leveled surface. **DO NOT** place or store anything on top of the product when in use.

5. To prevent fire, **DO NOT** place the appliance on or near a gas or electric hob.

6. **DO NOT** use an extension cord. A short power-supply cord is used to reduce the risk of children less than 8 years grabbing the cord or becoming entangled and to reduce the risk of people tripping over a longer cord. Additionally, the use of extension cords is not recommended, as it may cause overheating and fire hazards. If necessary, use a cord with a minimum rating of 14 AWG and 1875 watts.

7. To protect against electrical shock, **DO NOT** immerse the cord, plugs, or main unit housing in water or other liquid.

8. Regularly inspect the appliance and power cord. **DO NOT** use the appliance if there is damage to the power cord or plug. If the appliance malfunctions or has been damaged in any way, immediately stop use and call Customer Service.

9. Disconnect the appliance from the power supply when not in use for an extended period or before cleaning and servicing.

10. ALWAYS ensure the appliance is properly assembled before use.

11. This appliance is for household use only. **DO NOT** use this appliance for anything other than its intended use. **DO NOT** use it in moving vehicles or boats. **DO NOT** use it outdoors. Misuse may cause injury.

12. Cleaning and user maintenance should not be carried out by children.

13. To disconnect, turn any control to OFF, then unplug it from the socket when not in use and before cleaning. Allow the appliance to cool before cleaning, disassembly, putting in or taking off parts, and storing it.

14. Please refer to the Cleaning & Maintenance section for regular maintenance of the appliance.

15. If the appliance requires servicing, consult a certified technician. **DO NOT** attempt to repair it yourself.

16. If the supply cord is damaged, it must be replaced by the manufacturer, its service agent, or a similarly qualified person to avoid a hazard.

17. **DO NOT** use the appliance outdoors or expose it to direct sunlight. Maintain at least 25 cm of clearance at the back of the appliance for proper ventilation.

18. Tipping the appliance may cause abnormal noise, water leakage, or improper ice production.

19. If the appliance is brought indoors from cold weather, allow it to warm to room temperature for several hours before plugging it in.

20. Use only water to make ice cubes. **DO NOT** use any other liquids.

21. **DO NOT** clean the appliance with flammable fluids, as fumes may create a fire or explosion hazard.

22. Keep ventilation openings in the appliance enclosure or built-in structure free of obstruction.

23. **DO NOT** damage the refrigerant circuit. If the refrigerant tubing is punctured, consult factory-authorized personnel for servicing.

24. This appliance must be earthed and connected to a 110-120V/60Hz power supply according to the nameplate.

25. **DO NOT** store explosive substances, such as aerosol cans with flammable propellant, in or near the appliance.

⚠ Risk of Fire or Explosion-Flammable Refrigerant Used

Dispose of the appliance following federal or local regulations. Follow all handling instructions to ensure safe disposal.

26. **DO NOT** use mechanical devices to defrost the machine.

27. **DO NOT** puncture refrigerant tubing.

28. Servicing must be performed by trained personnel only.

29. The ice maker should comply with the safety standards for refrigeration systems (ASHRAE15) and should not be installed in corridors or hallways of public buildings.

30. Clean and maintain the appliance regularly according to the Cleaning & Maintenance section of this manual.

KEY COMPONENTS AND STRUCTURE

① **Top cover**
② **Ice-Taking Door**
③ **Ice-Making & Water reservoir Assembly**
Includes the ice-making evaporator, water reservoir, water pump, and various detecting components.
④ **Front Panel**
⑤ **Operation Panel**
⑥ **Air Outlet**
Ensure smooth air circulation. Hot air will be released from this outlet during operation.
⑦ **Water Draining Port for Water Output**
Typically sealed with a cap. To drain water, remove the cap and connect the provided grey drain pipe.
⑧ **Water Inlet Port for Water Supply**
Connect the water supply pipe to this port.

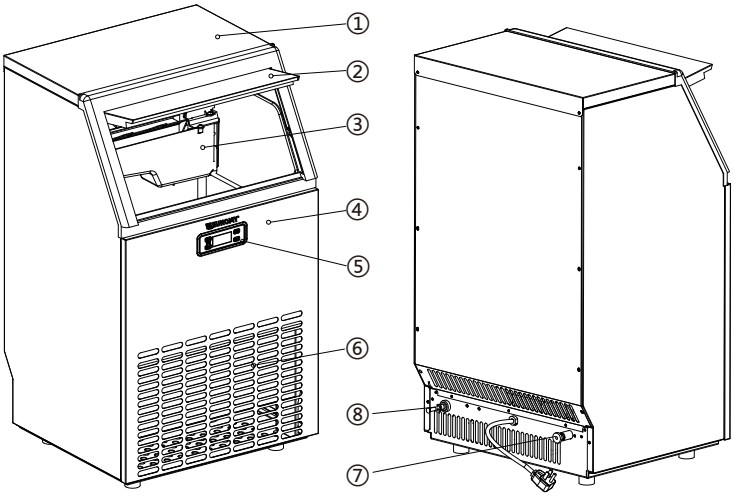

Accessories

1 x Grey Water Drain Pipe (2 meters long)
1 x White Water Supply Pipe (6.35 mm diameter and 3 meters long)
1 x Water Quick Connector (4 Ways to 2 Ways)
1 x Rubber Gasket 1 x Blue Hose Clamp 1x Ice Scoop

DETAILED COMPONENT DESCRIPTIONS

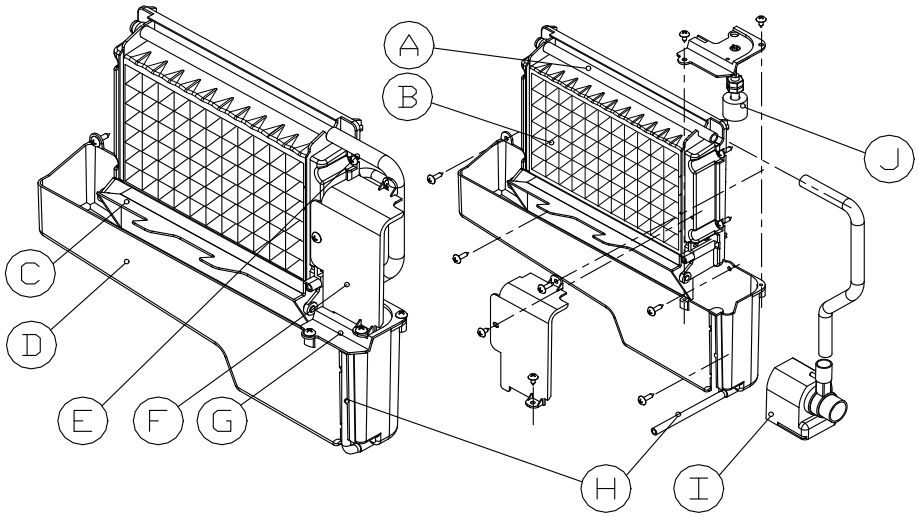

A. Water Dividing Pipe

Equipped with nine small holes through which water flows. If no water flows out, the pipe can be disassembled and cleaned.

B. Evaporator (Ice-Making Module)

C. Ice Full Detecting Board

Detects whether the inner cabinet is full of ice and whether the ice-harvest process is complete. A magnet inside the hole on the right side of the ice-blocking plate helps it return to its original position.

D. Water Reservoir

E. Water Supplying Pipe

F. Cover Board on the Right Side of the Evaporator

G. Water Level Switch Installing Plate

H. Water Drainpipe of the Water Reservoir

When the unit is making ice, this pipe should be clamped into the slot on the water reservoir wall. For draining, the pipe should be removed from the slot.

I. Water Pump

J. Water Level Detecting Switch

GETTING TO KNOW YOUR ICE MAKER

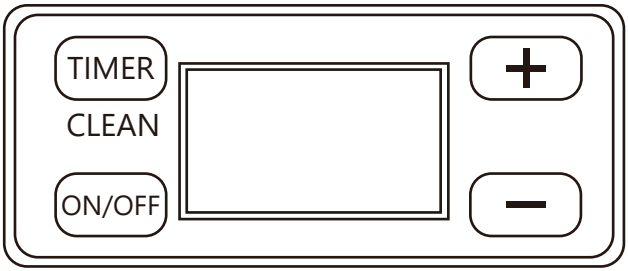

"TIMER/CLEAN" Button

Press Once: Access the Timer Setting program.
Press Twice: Close the Timer Setting.
Press and Hold (5+ Seconds): Start the Cleaning program.

"ON/OFF" Button

Press once to turn on the machine when it is off.
Press once to turn off the machine when it is making ice or running in cleaning mode.
If a timer is set, press once to cancel the timer setting.
During the ice-forming process, press and hold for 5 seconds to force the ice-harvesting process.

"+" and "-" Buttons

Adjust Ice-Making Time: Press to increase or decrease by 1 minute per press.
Adjust Timer Delay: Press to increase or decrease by 1 hour per press.
Switch Temperature Units: Press and hold the "+" or "-" buttons for 5 seconds to toggle between Fahrenheit (℉) and Celsius (℃).

LCD Display Guide

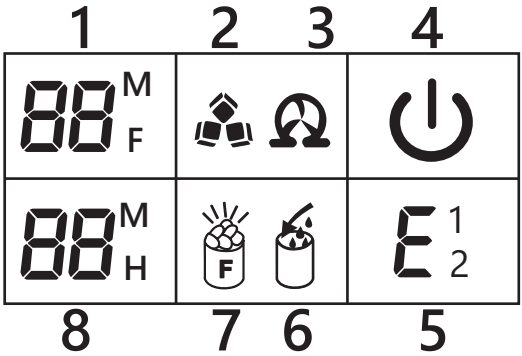

1. **Environmental Temperature**
   • The panel shows the ice-making time countdown in minutes (displayed as **"M"**) and the environmental temperature in Fahrenheit (displayed as **"F"**).

2. **Ice-Making and Deicing Symbol**
   • When the symbol rotates, the machine is making ice.
   • When the symbol keep light, the ice bin is full, and the machine is stopping the process.

3. **Automatic Self-Cleaning Symbol**
   • Indicates the machine is in self-cleaning mode.

4. **Power On/Off Symbol**
   • The symbol lights up when the machine is on. If it flashes, the machine is in standby mode.

5. **Error Code Display**
   • *E1:* Environmental temperature sensor is damaged.
   • *E2:* Ice-making malfunction or refrigerant leak detected.

6. **Water Flow and Water Shortage Symbol**
   • A flashing arrow indicates water is flowing into the machine.
   • A steady symbol indicates a water shortage.

7. **Ice Full Alarm**
   • Alerts when the ice bin is full. Removing ice shortly resumes ice-making; prolonged inactivity stops ice-making and melts the ice to extend product lifespan.

8. **Settings Display**
   • **H (Timer):** 1-24H. In standby, press Timer and **"+"** to set start delay (e.g., "1H" = starts in 1 hour). During ice-making, press Timer and **"+"** to set stop delay (e.g., "1H" = stops in 1 hour).
   • **M (Ice Thickness):** Adjust with **"+"** and **"-"** ("-6" = thinnest, "0" = default, "+6" = thickest).

1. Setup the Ice Maker

A. Unpack and Inspect

Remove all exterior and interior packaging. Confirm all accessories are included: instruction manual, ice scoop, white water inlet pipe, 4-way to 2-way water quick connector, water draining pipe, etc. If anything is missing, contact our customer service (Email support@euhomy.com or call us at +1-833-362-2655(US)).

B. Prepare the Ice Maker

Remove any tape securing the door, inner cabinet, and ice scoop. Clean the inner cabinet and ice scoop with a damp cloth.

C. Position the Ice Maker

Place the unit on a level, flat surface away from direct sunlight and heat sources (e.g., stove, furnace, radiator). Ensure a clearance of at least **25 cm (10 inches)** at the air outlet and **5 cm (2 inches)** between the left/right sides and the wall.

D. Allow Refrigerant to Settle

If the unit was tipped during shipping or transportation, let it sit upright for 24 hours to allow the refrigerant to settle before plugging it in.

E. Plug Accessibility

Position the appliance so that the plug is easily accessible.

Side View (inch)

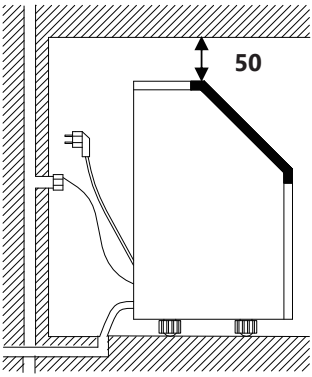

TIPS

1. This ice maker is not designed for outdoor use. Maintain the room temperature and inlet water temperature as specified to ensure optimal performance.
2. Ensure unobstructed ventilation at the front of the unit, with at least **25cm (10 inches)** of clearance. Allow **5 cm (2 inches)** of space at the back, top, and sides for proper air circulation. **DO NOT** place any objects on top of the ice maker.
3. Follow the recommended spacing dimensions for adequate ventilation and to allow the unit to be pulled forward for servicing.
4. The ideal ambient temperature is between 50°F and 90°F. Operating outside this range may affect performance or ice-making efficiency.
5. A continuous water supply with a pressure of 1-8 bar is required. The water temperature should be between 41°F and 77 °F for best results.

2. Connecting the Water Supply Hose

A. Prepare the Water Inlet Port

Locate the water inlet port for water supply at the back of the unit (marked as "B" in the illustration). Remove the clipper attached to the port by using one hand to press the outer circle of the port.

B. Attach the Water Hose

Insert one end of the white water hose firmly into the water inlet port, ensuring it is secure. Reattach the clipper to lock the hose in place. Your water supply connection is now complete.

3. Connecting the Water Drain Pipe

A. Prepare the Water Drainage Port

Locate the black-colored drainage cap (marked as "A" in the illustration). Remove it carefully.
*Please ensure the drain pipe lower than the water drainage port.

B. Attach the Drain Pipe

Connect the provided grey drainage pipe to the exposed drainage port. Ensure the other end of the pipe is securely connected to your main water drainage system.

Unit Back View

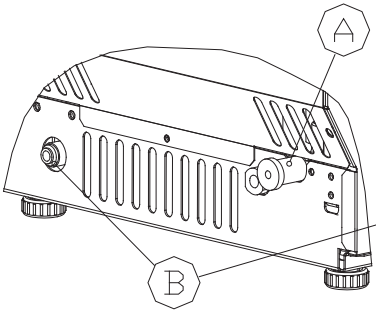

STEP 1: Remove the tape first

Water inlet port on the unit back

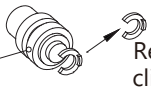

Remove the clipper first

STEP 2: Insert the water hose

Then install back the clipper

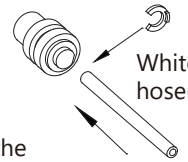

White water hose(accessory)

First insert the water hose inward completely

4. Connecting the Water Hose to the Faucet

A. Install the Quick-Connector

Attach the supplied quick-connector to the water faucet by screwing it on tightly.

B. Connect the Water Hose

Remove the clipper from the quick-connector. Insert the free end of the water supply hose into the quick-connector port until it fits securely. Reattach the clipper to lock the connection in place.

Important: Ensure the water pressure of the main supply system is between **0.04 MPa and 0.6 MPa** for proper operation.

**The drain pipes must all be lower than the drain outlet, and the length of the drain pipes can be appropriately cut according to usage.*

STEP 1:Qucik-connector and the water faucet

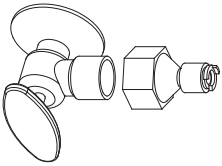

STEP 2:Screw the qucik-connector on the water faucet by the screw thread, and remove the clipper

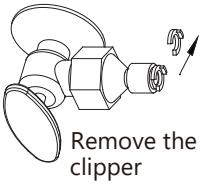

Remove the clipper

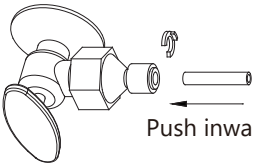

Push inwards

STEP 4:Install back the clipper

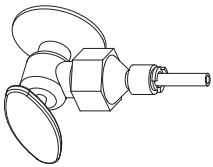

STEP 3:Insert the water hose completely

CLEANING YOUR ICE MAKER BEFORE USING FOR THE FIRST TIME

* We highly recommend using our cleaning solution for product maintenance.

Initial Cleaning

Use a diluted detergent, warm water, and a soft cloth to clean the ice maker.
Thoroughly clean all inner parts that come into contact with water.

Draining and Rinsing

Pull the water drainpipe of the water reservoir (indicated as "H" in the above illustration) to drain the clean water from the reservoir.

Clean the inner ice-storing cabinet and all inner parts until they are completely clean.

Drain the water from the water drain port located at the back of the unit (indicated as "7" in the above illustration).

Reassembly

Reinstall the water drainpipe of the water reservoir and unit’s water drain port.
Failure to do so may result in the unit not making ice properly.

Discard the First Batch of Ice

After cleaning, it is recommended to discard the ice cubes made during the first ice-making cycle.

Final Step

Dry both the interior and exterior of the ice maker with a clean, soft cloth.

HOW TO OPERATE THE ICE MAKER

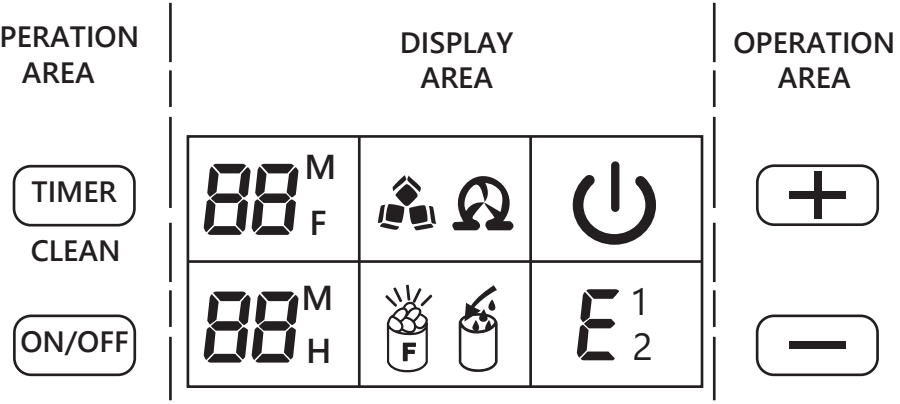

1. Starting Up the Unit

- Plug in the power supply, and the ⏻ symbol ⏻ will flash in the display window. Press the **ON/OFF** button to start the machine.
- The machine will begin making ice when the external pipe adds water to the reservoir, reaching the standard level via the electromagnetic water valve.
- The symbol ⏻ will stay lit, and the symbol will rotate.
- Ambient temperature is displayed in the upper-left corner of the display (e.g., 80F for 80°F).
- A flashing number (e.g., 10M) indicates the remaining time (10 minutes) for the current ice-making cycle.

2. Ice-Making Process

After every cycle:

- The machine enters the deicing process. The symbol flashes, and the external pipe adds water to the reservoir via the electromagnetic valve.
- The arrow on the symbol will flash until the water reaches the standard level.
- Once the standard level is met, the symbol extinguishes, and the unit enters the next cycle.

If water does not reach the required level:

- The symbol lights up, and the unit stops working.
- After a water shortage, restart the unit manually, or it will restart automatically after 15 minutes.
- Each cycle takes approximately 11–20 minutes, depending on the ambient and water temperature.
- The first cycle may take longer but will not exceed 30 minutes.

3. Adjusting Ice Thickness

- Use the **"+"** and **"–"** buttons on the control panel:
- **"+"** Button: Adds 1 minute to the ice-making time, making thicker ice.
- **"–"** Button: Reduces 1 minute from the ice-making time, making thinner ice.
- Default setting is **"0".** Restarting the machine resets it to default.

4. Ice Full Indicator

• When the symbol lights up, the machine will stop operating.
• Remove the ice to resume operation. Once the ice shield detects the ice has dropped, it will automatically reset and start a new ice-making cycle.

5. Shutting Down the Unit

• Press the **ON/OFF** button briefly to stop ice-making and enter standby mode.
• Hold the **ON/OFF** button for 5 seconds to initiate the deicing process, which helps remove ice from the plate.

6. Timer Settings

Range: 1–24 hours.
Modes:
• Time Shutdown: Set the unit to shut off after a specified duration.
• Time On: Set the unit to start automatically from standby mode.
How to Set Timer:
• Press the TIMER button (default is 1H).
• Use the **"+"** or **"–"** buttons to adjust the time in 1-hour increments.
• After 5 seconds, the display stops flashing, and the timer is set.
How to Cancel Timer:
• Press the **TIMER** button for two times, and the display will clear.

7. Automatic Self-Cleaning Program

Default Cleaning Time: 20 minutes.
How to Start Self-Cleaning:
• Connect water pipes and plug in the power supply.
• Hold the **TIMER/CLEAN** button for more than 5 seconds.
• The Cleaning symbol rotates, and the countdown begins (e.g., 20M).
• The **"CLEAN"** light remains on, with the water pump running for 8 minutes and pausing for 3 minutes in cycles.
How to Cancel Self-Cleaning:
• The program ends automatically after 20 minutes.
• Press **ON/OFF** to cancel manually during cleaning.

8. Switching Temperature Units (℉ to ℃)

• Hold the **"+"** or **"-"** button for more than 5 seconds to toggle between Fahrenheit (**℉**) and Celsius (**℃**).

PREPARING YOUR ICE MAKER FOR LONG-TERM STORAGE OR RELOCATION

If your ice maker will not be used for an extended period or if it needs to be moved to a different location, it's essential to prepare it correctly. Follow these steps:

Step 1: Drain All Water

Remove All Ice: Empty the ice storage bin.
Power Off: Unplug the ice maker from the power source.
Turn Off Water Supply: Shut off the water supply to the ice maker.
Disconnect Water Line: Disconnect the water line connected to the ice maker.
Drain Water Tank: Locate the water reservoir drain and empty it completely.
Drain Water Pump: Drain any remaining water from the water pump and drain pipe.
Leave Door Open: Prop the door open to allow for air circulation and to prevent mold.

Step 2: Clean and Maintain

Unplug Before Cleaning: Always unplug the ice maker before cleaning.
Avoid Harsh Chemicals: Do not use alcohol or harsh cleaning agents, as they can damage the ice maker.
Clean Condenser Coil: Clean the condenser coil at least once a year to ensure optimal performance.
Deep Clean Before Storage: If the ice maker has been sitting idle for a long time, give it a thorough cleaning before using it again.

Step 3: Store Properly

Dry Completely: Ensure the ice maker is completely dry before storing.
Cover: Use a plastic bag to cover the ice maker, protecting it from dust.

Daily Use Tips

Ice Only: Use the ice storage bin exclusively for ice. Avoid storing other items like bottles or cans.

Mild Detergent: When cleaning the exterior, use a mild detergent and warm water. Avoid abrasive cleaners.

Stainless Steel Care: If your ice maker has stainless steel components, clean them with a stainless steel cleaner and a soft cloth.

CLEAN YOUR ICE MAKER

General Cleaning

1. Clean the door and cabinet using our cleaning solution for optimal maintenance.
2. Avoid using solvent-based or abrasive cleaners.
3. Use a soft sponge to clean, then rinse thoroughly with clean water.
4. Wipe dry with a soft, clean towel to prevent water spots.
5. Stainless steel models can discolor when exposed to chlorine gas.

Cleaning the Ice Storage Bin

1. **Disconnect power:** Unplug the ice maker from the power source.
2. **Clean the bin:** Wipe down the inside of the bin with our cleaning solution.
3. **Rinse:** Thoroughly rinse the bin with clean, cold water.
4. **Reconnect power:** Plug the ice maker back in.

Cleaning the Ice Making Parts

1. **Disconnect power:** Unplug the ice maker.

2. **Clean the water reservoir and other parts:** Clean the water reservoir, water pump, and other internal parts. Pay special attention to the water dividing pipe on the evaporator. If water is not flowing through this pipe or the flow is very weak, carefully clean each small hole on the pipe to remove any blockages.

3. **Clean the evaporator:** If there is ice on the surface of the evaporator that won't fall off easily, turn on the ice maker and press the **"ON/OFF"** button for more than 5 seconds. This will melt the ice. Once the ice has melted, turn off the ice maker and unplug it. Clean the surface of the evaporator.

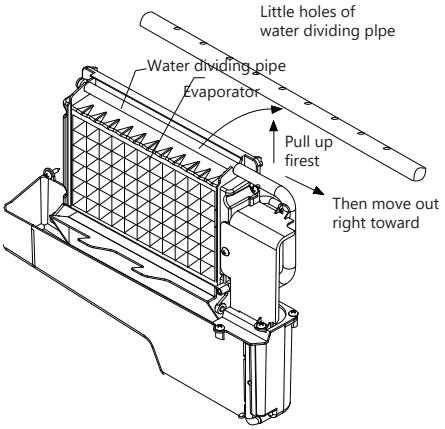

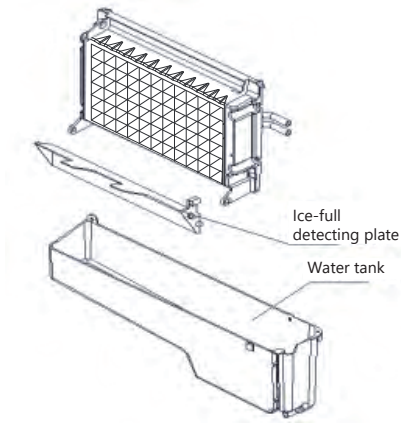

Weekly Cleaning

Clean the ice shovel, ice bin, water reservoir, ice-full detecting plate, and the surface of the evaporator every week. Follow the detailed cleaning instructions provided in the manual.

Semi-Monthly Cleaning

Every 6 months, deep clean all parts that come into contact with water or ice, including the ice storage bin, water reservoir, door, evaporator, water pump, and silicone tube.
It is recommended to have a professional technician perform this cleaning.

Note:

1. Avoid harsh chemicals: Do not use harsh chemicals or abrasive cleaners on any part of the ice maker. These can damage the surface and affect the taste of the ice.

2. Regular cleaning: For optimal performance, clean your ice maker regularly.
By following these simple steps, you can keep your ice maker clean and hygienic, ensuring that you always have a supply of fresh, clean ice.

	When the unit is taken out of service, its disposal and the handling of its materials must comply with national regulations.

FAQs

1. How often should I clean my ice maker?

To ensure optimal performance, clean your ice maker at least once a week, depending on usage. Regular cleaning prevents scale buildup, which can block the pump and cause the machine to malfunction.

2. How do I clean the ice maker?

General Maintenance

•In standby mode, press and hold the "TIMER/CLEAN" button for 5 seconds to activate the Cleaning Mode.

•After draining the water, return the drainage hose (on the right side of the water reservoir) to its normal position. Repeat cleaning if needed.Normally Cleaning

Deep Cleaning

• Turn off the water supply, drain the water reservoir, and return the drainage hose to its original position.

• Dilute the cleaning solution as instructed, then pour it into the water reservoir up to the **"MAX"** level.

• In standby mode, press and hold the **"TIMER/CLEAN"** button for 5 seconds to activate the Cleaning Mode.

• Once finished, drain the solution, refill the reservoir with fresh water, and run a few cleaning cycles. Drain again to ensure no residue remains. Discard the first batch of ice to ensure no cleaning solution residue remains.

3. Why do the ice cubes come out as a solid sheet instead of dropping as individual cubes?

We apologize if our product did not meet your expectations. The ice maker is designed to create ice in sheets rather than individually to enhance the efficiency of the ice-making process. We recommend reducing the ice-making time if the sheets are too thick or using the provided scoop to break the ice apart.

4. Why do my ice cubes melt quickly?

The ice maker does not have a refrigeration function. High ambient temperatures, especially in summer, can accelerate melting.

• Close the lid to maintain the internal temperature.

• Place a fan near the machine to disperse heat.

• For long-term storage, transfer ice cubes to a refrigerator.

5. Why is the ice maker white instead of stainless steel?

The machine is made of stainless steel but comes with a white protective film to prevent scratches and fingerprints. If you prefer the stainless steel appearance, simply peel off the protective film.

6. Why are my ice cubes cloudy?

Cloudy ice cubes often result from impure water. Use drinking water or distilled water for clearer ice. If the water quality is consistently poor, consider installing a water filter kit.

7. Can I put milk or juice in the water reservoir?

No, we strongly advise against this. High concentrations of milk or juice can clog the pump and shorten its lifespan. Additionally, milk proteins may calcify and react with the machine's internal PU water pipe, potentially causing damage.

8. Why is my ice too thick and difficult to release from the tray?

This may happen if the ice-making time is too long or if the room temperature is very low. To adjust ice thickness:

• Use the “+” and “-” buttons on the control panel.

• The number in the bottom-left corner of the display indicates the set ice-making time (default is 0).

• Press “+” to increase the time in 1-minute increments for thicker ice or “-” to reduce it for thinner ice.

9. Why does the ice cubes have a plastic smell?

The ice cube itself has no taste. If you think there is a plastic smell, try to clean the inside of the machine with neutral nickel-protecting cleaner,then run a few cycles, and finally rinse with distilled water. Discard the first batch of ice to ensure no cleaning solution residue remains.

10. Why is there noise in the operation of my machine?

There is a faint sound when the machine is running. Closing the lid can reduce the noise. If the water pump makes a noise during use, it is recommended to press and hold the **‘TIMER/CLEAN’** button for five seconds in standby mode to start self-cleaning mode first, and then turn on the machine to observe whether or not the noise disappears.

11. Why is water leaking from the machine?

Leaks may occur if the PUA tube inside the machine became disconnected during transport. Here's what to check:

• Ensure the drain pipe is connected. The machine uses gravity drainage and includes a black drain plug at the port to prevent dust. For first-time use, move the plug and connect the drain pipe. Afterward, keep it connected at all times to maintain smooth drainage.

• If needed, remove the back cover to reconnect the tube manually.

• If you need assistance, contact the Euhomy team for a step-by-step video guide.

12. Will the melted ice water in the ice basket be recycled?

For hygiene and safety reasons, the melted ice that falls into the ice basket will be naturally drained by gravity. However, the water in the reservoir above the ice basket will be recycled to the evaporator until new ice is formed, so that no water is wasted.

For further support, feel free to reach out to the Euhomy support team!

For further support, feel free to reach out to the Euhomy support team!

1-833-362-2655

support@euhomy.com

https://euhomy.com

TROUBLESHOOTING

Problem	Possible Cause	Solution
" " indicator is on.	No water supply.	Check the main water supply pressure or check the water supply hose is blocked or not, adding the water pressure or cleaning the hose necessary.
	Floating ball of the water level detecting switch is blocked, can't be raised up.	Clean the water reservoir and the water level detecting switch.
	Water flows out from the water reservoir.	Place the unit on the level position, not on the slope.
	Water flows out from the water drainpipe of the water reservoir.	Pull out the pipe and install back to the slot of the water reservoir properly.
Water pump is working, but no water flow out from the water dividing pipe.	The little holes on the water dividing pipe is blocked.	Clean these little holes.
Water pump is not working.	The water pump is blocked or broken.	Clean the water pump or contact the after-sales team to replace the pump.
" " indicator is on.	The ice storage bin is full of ice cubes.	Remove the ice cubes in time within a short time, the symbol will disappear, and ice making will start again.
Ice making cycle is normal, but there is no ice cube produced.	The temperature of Ambient, or water in water reservoir is too high.	Move to the place with temperature lower than 90 degrees Fahrenheit and \\change to the low tempera-ture water.
	Insufficient refrigerant.	Please contact the after-sales team to replace the item.
	Cooling system tube is clogged.	Please contact the after-sales team to replace the item.

Ice cube is very thin.	Ambient temperature is too high.	Place in a cool place.
	Air circulation around the unit is not good.	Keep the vents unobstructed.
Ice cube is too thick.	Ambient temperature is too low.	Please press the **ON/OFF** button for more than 5 seconds until you hear the sound of the machine dropping ice. It takes 3-5 minutes for the ice cubes to fall. Reduce the ice making time before the next ice making.
Ice cube shape is irregular.	Water quality is not good, the water reservoir is very dirty and the ice cubes do not fill the grid.	Change the water supply, or clean the water reservoir regularly.
	The little holes on the water dividing pipe is some blocked or the holes are not facing downward and aligned with the evaporator.	Clean and adjust the angle of the water distribution pipe. Make sure each hole is facing downward, and adjust the water pressure.
The transparency of the ice cube is not very good.	Water quality is not good.	Change the water supply, or use the water filter to soften or filter the water.
It stops automatically after only two rounds, and the E2 code is displayed.	The ice baffle plate cannot feel the ice falling for two consecutive rounds.	Please contact our customer service team directly at support@euhomy.com.
No response after power on.	Power not connected or the machine is faulty.	We recommend trying to plug the ice machine into a different outlet to see if it works Please contact our customer service team directly at support@euhomy.com.

SPECIFICATIONS

Specification	Value
SKU	CIM004-150BS-USEH
Model	CIM004-150
Refrigerant	R290 1.76Oz/50g
Voltage/Frequency	115V/60HZ
Rated Ice-Making Power/Current	2.7A
Product Dimensions	17.6*15.7*31.3 inches
Net/Gross Weight	62.83/70.42 lbs

WARRANTY POLICY

Euhomy is dedicated to delivering top-notch products and outstanding customer service. We back our products 100% and are here to support you every step of the way.

To activate your warranty, please visit **https://euhomy.com**
To request customer service, feel free to contact us anytime!

For further support, feel free to reach out to the Euhomy support team!

1-833-362-2655(US) support@euhomy.com https://euhomy.com

Business Time: Mon to Fri, 9 AM- 6 PM (ET)

Euhomy 1-Year Limited Warranty

The One-Year (1) Limited Warranty is valid for purchases from this website or official Euhomy purchase channels such as Amazon, TikTok, and Walmart. It covers the original owner and product only, and it isn't transferable. For purchases made through unauthorized resellers, we recommend you contact them directly. Euhomy guarantees the unit is free of material and workmanship defects for one year from the purchase date, as long as it's used under normal household conditions and maintained per the User Manual. This is subject to certain conditions and exclusions as follows:

What is covered?

If the original unit or non-wearable parts are found defective, as determined by Euhomy, we will arrange repair or replace it within one year from the purchase date. If you receive a replacement unit, the warranty lasts for the remainder of the original warranty.

What is not covered?

(a) Normal wear and tear on the unit or parts, as well as any parts lost or damaged due to human factors after delivery; replacement parts are available for purchase. Feel free to contact us using the methods provided below.

(b) Damage from misuse, mishandling, accidents, or not following the operating instructions.

(c) Damage caused by exposure to liquids other than water or foreign substances.

(d) Repairs or modifications not performed by Euhomy.

(e) Use in commercial settings or non-household environments (except for commercial models).

How to get service?

If your appliance isn't working properly or if you need any assistance, we offer several ways for you to get in touch with us.

You can reach us by calling **1-833-362-2655** or emailing **support@euhomy.com** directly. For specific product categories, we also offer potential upgrades to enhance your warranty to our VIP service.Our phone lines are open from **Mon to Fri, 9 AM - 6 PM (ET)**, and we normally respond to emails and forms within **24 business hours**. To help us assist you better, we recommend that you register your product online at **1-833-362-2655** and have the appliance with you when you call us. If you reach out via email, sometimes our emails might end up in your spam folder, so please check there to make sure you don’t miss our response. The proof of purchase will be needed when you request a warranty service.
In addition to our one-year warranty, we offer lifetime technical support. After the warranty expires, you can arrange for service at an additional cost.

Feel free to contact us anytime with any issues.

EUHOMY

Live the *cool life*

support@euhomy.com https://euhomy.com 1-833-362-2655(US)