RULES FOR SAFE OPERATION

To help ensure safe operation, please take a moment to learn the machine's applications and limitations, as well as potential hazards. General® International disclaims any real or implied warranty and hold itself harmless for any injury that may result from the improper use of it's equipment.

1. Do not operate the drill press when tired, distracted, or under the effects of drugs, alcohol or any medication that impairs reflexes or alertness.

2. The working area should be well lit, clean and free of debris.

3. Keep children and visitors at a safe distance when the drill press is in operation ; do not permit them to operate the drill press.

4. Childproof and tamper proof your shop and all-machinery with locks, master electrical switches and switch keys, to prevent unauthorized or unsupervised use.

5. Stay alert! Give your work your undivided attention. Even a momentary distraction can lead to serious injury.

6. Fine particulate dust is a carcinogen that can be hazardous to health. Work in a well-ventilated area and whenever possible use a dust collector and wear eye, ear and respiratory protection devices.

7. Do not wear loose clothing, gloves, bracelets, necklaces or other jewelry while the drill press is in operation.

8. Be sure that adjusting wrenches, tools, drinks and other clutter are removed from the machine and/or the table surface before operating.

9. Keep hands well away from the drill bit and all moving parts. Use a hold-down or clamp to secure the stock, and use a brush, not hands, to clear away chips and dust.

10. Be sure that the drill bit is securely installed in the chuck before operation.

11. Be sure the drill bit has gained full operating speed before beginning to drill. Always use a clean, properly sharpened bit. Dirty or dull bits are unsafe and can lead to accidents. Use suitable work piece support if the work piece does not have a flat surface.

12. Do not push or force the bit into the stock. The drill will perform better and more safely when working at the rate feed for which it was designed.

13. Avoid working from awkward or off balance positions. Do not overreach and keep both feet on floor.

14. Keep guards in place and in working order. If a guard must be removed for maintenance or cleaning be sure it is properly re-attached before using the tool again.

15. Never leave the machine unattended while it is running or with the power on.

16. Use of parts and accessories NOT recommended by GENERAL® INTERNATIONAL may result in equipment malfunction or risk of injury.

17. Never stand on machinery. Serious injury could result if the tool is tipped over or if the drill bit is unintentionally contacted.

18. Always disconnect the tool from the power source before servicing or changing accessories such as bits, or before performing any maintenance, cleaning, or if the machine will be left unattended.

19. Make sure that the switch is in the "OFF" position before plugging in the power cord.

20. Make sure the tool is properly grounded. If equipped with a 3-prong plug, it should be used with a three-pole receptacle. Never remove the third prong.

21. Do not use this drill press for other than its intended use. If used for other purposes, GENERAL® INTERNATIONAL disclaims any real implied warranty and holds itvself harmless for any injury, which may result from that use.

ELECTRICAL REQUIREMENTS

BEFORE CONNECTING THE MACHINE TO THE POWER SOURCE, VERIFY THAT THE VOLTAGE OF YOUR POWER SUPPLY CORRESPONDS WITH THE VOLTAGE SPECIFIED ON THE MOTOR I.D. NAMEPLATE. A POWER SOURCE WITH GREATER VOLTAGE THAN NEEDED CAN RESULT IN SERIOUS INJURY TO THE USER AS WELL AS DAMAGE TO THE MACHINE. IF IN DOUBT, CONTACT A QUALIFIED ELECTRICIAN BEFORE CONNECTING TO THE POWER SOURCE.

THIS TOOL IS FOR INDOOR USE ONLY. DO NOT EXPOSE TO RAIN OR USE IN WET OR DAMP LOCATIONS.

Note: voltage requirements and amperage draw for M2 & M3 3-phase motors may not be fully described in this manual. For complete electrical requirements refer to the motor I.D. name plate on the machine. If in doubt consult a licensed qualified electrician before proceeding.

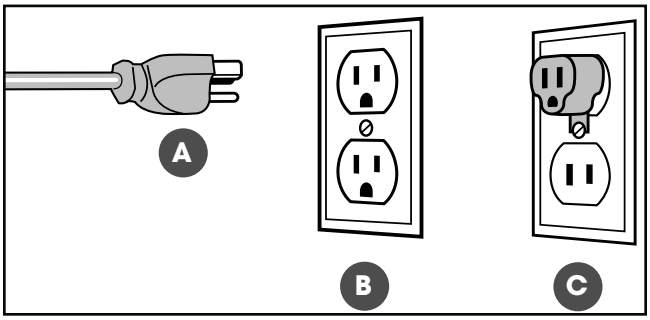

ELECTRICAL CONNECTIONS

In the event of an electrical malfunction or short circuit, grounding reduces the risk of electric shock. The motor of this machine is wired for 110 V single phase operation and is equipped with a 3-conductor cord and a 3-prong grounding plug **A** to fit a grounded type receptacle **B**.

Do not remove the 3rd prong (grounding pin) to make it fit into an old 2-hole wall socket or extension cord. If an adaptor plug is used **C**, it must be attached to the metal screw of the receptacle.

Note: The use of an adaptor plug is illegal in some areas. Check your local codes. If you have any doubts or if the supplied plug does not correspond to your electrical outlet, consult a qualified eletrician before proceeding.

CIRCUIT CAPACITY

Make sure that the wires in your circuit are capable of handling the amperage draw from your machine, as well as any other machines that could be operating on the same circuit.

If you are unsure, consult a qualified electrician. If the circuit breaker trips or the fuse blows regularly, your machine may be operating on a circuit that is close to its amperage draw capacity. However, if an unusual amperage draw does not exist and a power failure still occurs, contact a qualified technician or our service department.

EXTENSION CORDS

If you find it necessary to use an extension cord with your machine, use only 3-wire extension cords that have 3-prong grounding plug and a matching 3-pole receptacle that accepts the tool's plug.

Repair or replace a damaged extension cord or plug immediately.

Make sure the cord rating is suitable for the amperage listed on the motor I.D. plate. An undersized cord will cause a drop in line voltage resulting in loss of power and overheating.

The accompanying chart shows the correct size extension cord to be used based on cord length and motor I.D. plate amp rating. If in doubt, use the next heavier gauge. The smaller the number, the heavier the gauge.

TABLE - MINIMUM GAUGE FOR CORD

AMPERE RATING	TOTAL LENGTH OF CORD IN FEET				
	110 VOLTS	25 FEET	50 FEET	100 FEET	150 FEET
	220 VOLTS	50 FEET	100 FEET	200 FEET	300 FEET
	AWG				
< 5	------->	18	16	16	14
6 TO 10	------->	18	16	14	12
10 TO 12	------->	16	16	14	12
12 TO 16	------->	14	12	* NR	* NR

* NR = Not Recommended

IDENTIFICATION OF MAIN PARTS AND COMPONENTS

FRONT VIEW

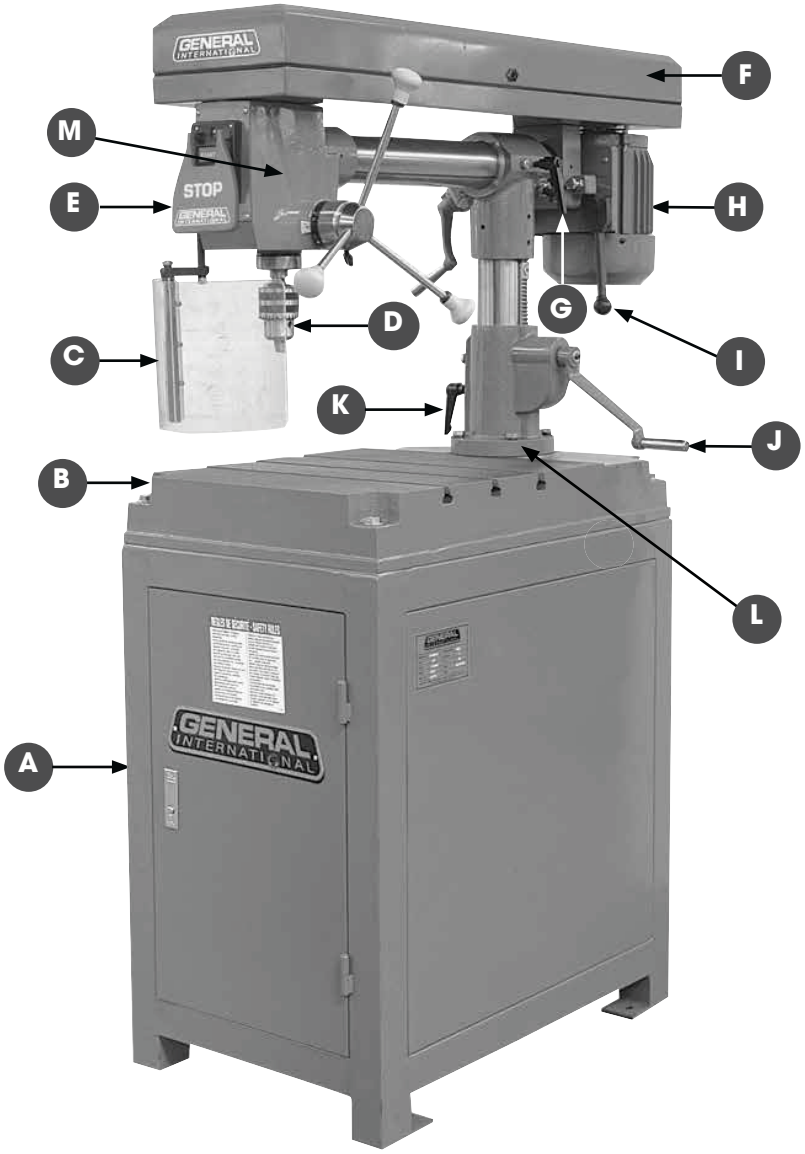

A. BASE CABINET
B. TABLE
C. CHUCK GUARD
D. CHUCK
E. SWITCH
F. BELT/PULLEY COVER
G. HEAD TILT LOCKING LEVER
H. MOTOR
I. BELT ADJUSTMENT HANDLE
J. HEIGHT ADJUSTMENT HANDLE
K. HEAD PIVOT LOCKING LEVER
L. COLUMN SUPPORT BRACKET
M. HEADSTOCK

INSTALLATION

PLACEMENT WITHIN THE SHOP

This machine should be installed and operated only on a solid, flat and stable floor that is able to support the weight of the machine (506 lbs - 230 kg) and the operator. Using the dimensions shown as a guideline, plan for placement within your shop that will allow the operator to work unencumbered and unobstructed by foot traffic (either passing shop visitors or other shop workers) or other tools or machinery.

ESTABLISHING A SAFETY ZONE

For shops with frequent visitors or multiple operators, it is advisable to establish a safety zone around shop machinery. A clearly defined "no-go" zone on the floor around each machine can help avoid accidents that could cause injury to either the operator or the shop visitor.

It is advisable to take a few moments to either paint (using non-slip paint) or using tape, define on the floor the limits or perimeter of each machines safety zone. Take steps to ensure that all operators and shop visitors are aware that these areas are off limits whenever a machine is running for everyone but the individual operating the unit.

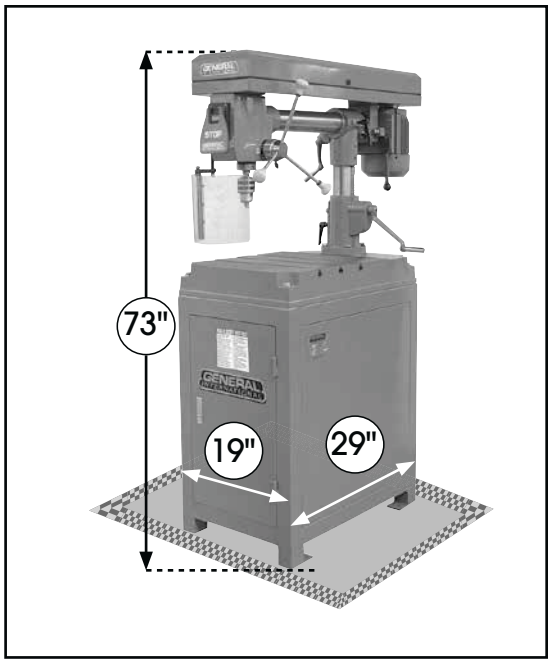

ASSEMBLY INSTRUCTIONS

BEFORE STARTING THE ASSEMBLY, MAKE SURE THAT THE SWITCH IS IN THE "OFF" POSITION AND THAT THE POWER CORD IS UNPLUGGED. DO NOT PLUG IN OR TURN ON THE MACHINE UNTIL YOU HAVE COMPLETED THE ASSEMBLY AND INSTALLATION STEPS DESCRIBED IN THIS SECTION OF THE MANUAL.

INSTALLING CHUCK GUARD ON HEADSTOCK

TO REDUCE THE RISK OF SERIOUS INJURY, ALWAYS COVER THE CHUCK AND DRILL BIT WITH THE CHUCK GUARD WHEN USING THE DRILL PRESS.

NOTE: THE SEE-THROUGH SWING-AWAY CHUCK GUARD IS EQUIPPED WITH A SAFETY INTERLOCK THAT AUTOMATICALLY SHUTS OFF THE MACHINE WHEN THE CHUCK GUARD IS OPENED. TO TURN ON OR RUN THE DRILL PRESS, MAKE SURE THAT THE CHUCK GUARD IS PROPERLY CLOSED.

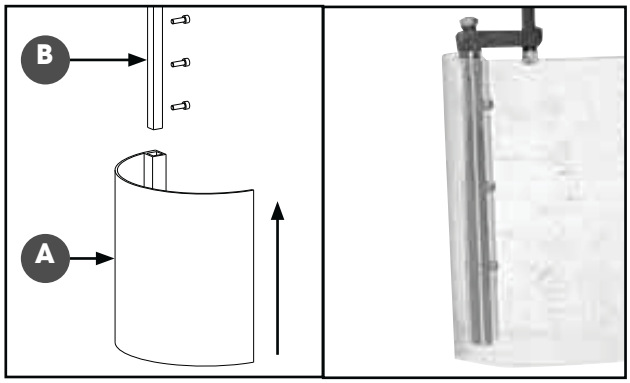

1. Assemble the plexiglass cover **A** and the shaft **B** as shown using the supplied screws.

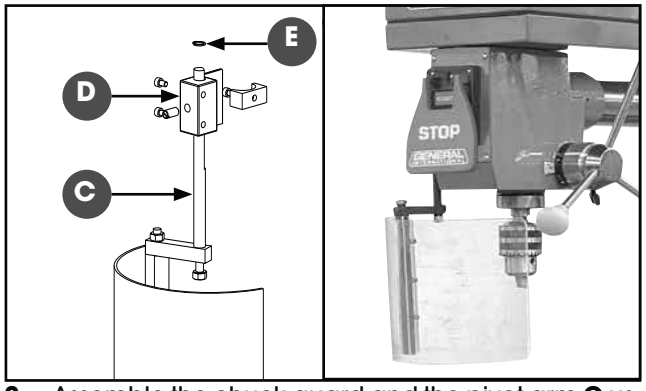

2. Assemble the chuck guard and the pivot arm **C** using the screws supplied. Then fit the pivot arm onto the bracket **D** using the supplied "E" ring **E** and screw the bracket **D** on the drill.

INSTALLING THE CHUCK

MAKE SURE THAT THE SWITCH IS IN THE "OFF" POSITION BEFORE INSTALLING THE CHUCK AND ARBOR.

1. Slide the arbor **B** into the quill assembly **C** flat end first.
2. Slide the chuck **A** onto the tapered end of the arbor **B** and using the feed handle, lower the quill assembly against the table to secure the chuck.

Important: To avoid damaging the chuck place a piece of wood on the table.

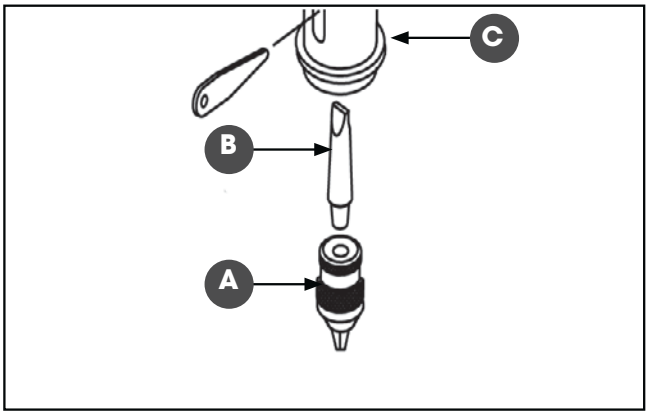

REMOVING THE CHUCK AND ARBOR

MAKE SURE THAT THE SWITCH IS IN THE "OFF" POSITION BEFORE REMOVING THE CHUCK AND ARBOR.

1. Turn "OFF" and disconnect the drill from the power source.
2. Using the feed handle, lower the quill assembly **E**.
3. Insert the drift key **D** all the way into the quill assembly and while holding onto the chuck, tap gently on the key with a hammer or rubber mallet to loosen and remove the arbor and chuck.

Note: It may be necessary to rotate the quill in order to be able to get the tool all the way through E.

4. While holding onto the chuck to prevent damage, raise the quill assembly **E**. The arbor and chuck should fall out.

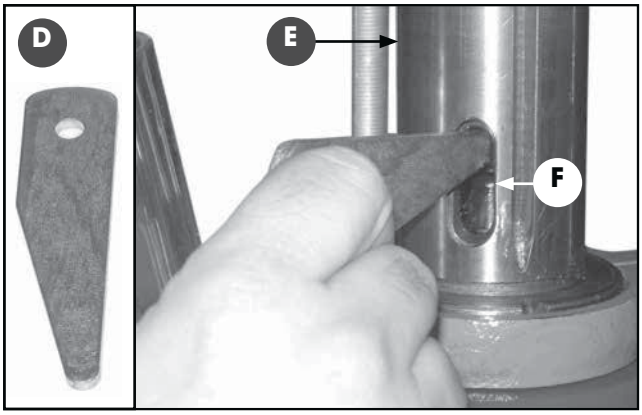

BASIC ADJUSTMENTS & CONTROLS

CONNECTING TO A POWER SOURCE

TO REDUCE THE RISK OF SHOCK OR FIRE DO NOT OPERATE THE UNIT WITH A DAMAGED POWER CORD OR PLUG. REPLACE DAMAGED CORD OR PLUG IMMEDIATELY.

Once the assembly steps have been completed, uncoil the power cord and plug into an appropriate outlet.

Refer back to the section entitled "Electrical Requirements" and make sure all requirements and grounding instructions are followed.

When drilling operations have been completed turn off and unplug the drill from the power source.

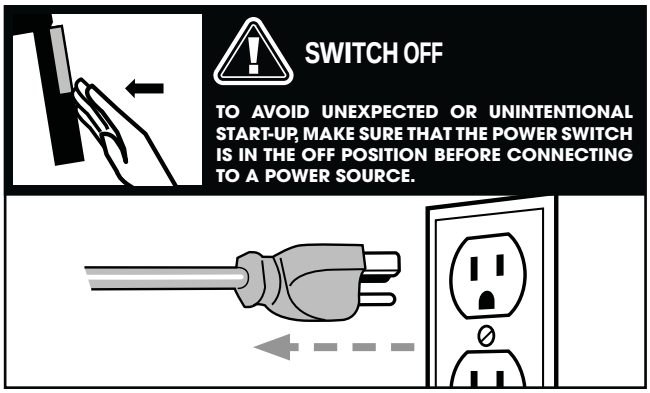

ON/OFF POWER SWITCH

This drill model is equipped with an ON/OFF power switch panel.

To start/stop the machine:

1. Pull up the cover **1**

2. Press the green start button **2**.

3. To stop the machine, press the red panel **3**.

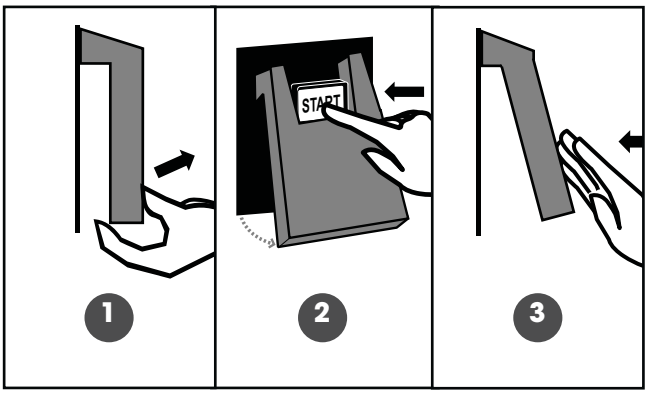

HEADSTOCK LONGITUDINAL ADJUSTMENT

TO AVOID UNINTENTIONAL START-UP, MAKE SURE THAT THE POWER SWITCH IS IN THE "OFF" BEFORE MAKING ANY ADJUSTMENTS.

1. Loosen the lock lever **A**.

2. Turn the handle **B** until the headstock is at the desired position.

3. Retighten lock lever **A** before using the drill.

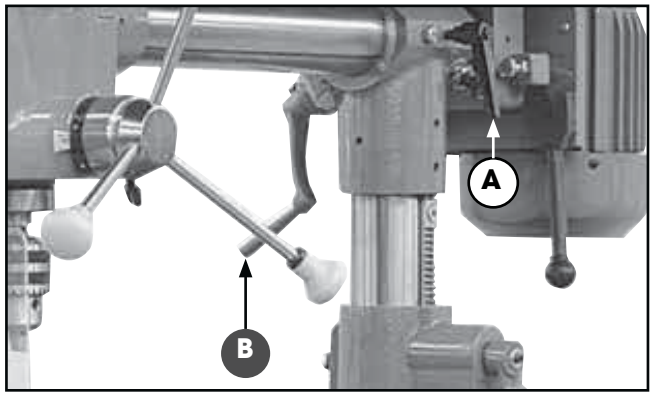

HEADSTOCK TILT ADJUSTMENT

1. Loosen the head tilt lock lever **E.**

2. Pull out the lock pin **D** and manually tilt the head to the desired angle using the scale **C** as a reference.

3. Retighten the lock lever **E** before starting the machine.

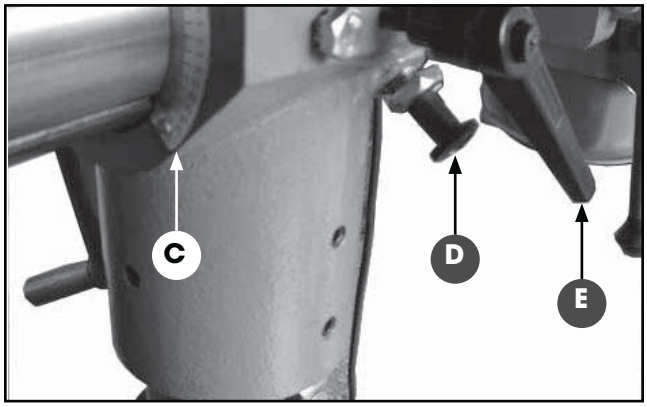

DEPTH STOP ADJUSTMENT

1. Loosen the lock knob **F**.

2. Use the feed handle to lower the chuck to the desired drilling depth.

3. With the chuck held at the desired depth, tighten the lock knob **F** to lock the depth stop in place.

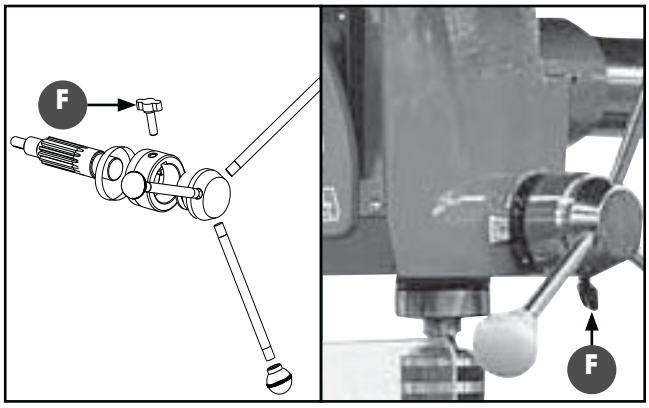

HEADSTOCK HEIGHT ADJUSTMENT

TO AVOID UNINTENTIONAL START-UP, MAKE SURE THAT THE POWER SWITCH IS IN THE "OFF" BEFORE MAKING ANY ADJUSTMENTS.

1. Loosen the lock lever **A.**
2. Turn the crank handle **B** until the headstock is at the desired height.
3. Retighten the lock lever **A** before using the drill.

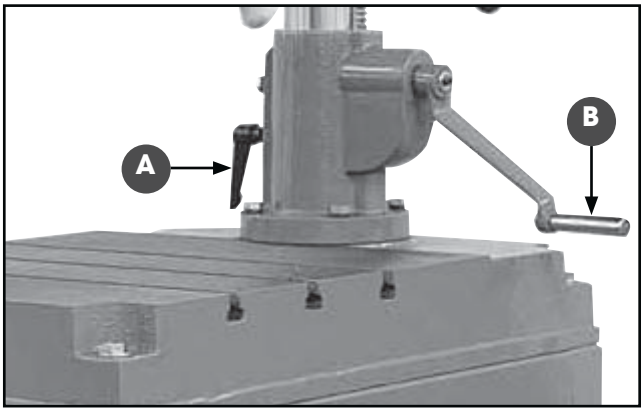

CHANGING SPEEDS

DISCONNECT THE DRILL PRESS FROM THE POWER SOURCE. MAKE SURE THE DRILL PRESS HAS COME TO A COMPLETE STOP BEFORE CHANGING SPEEDS.

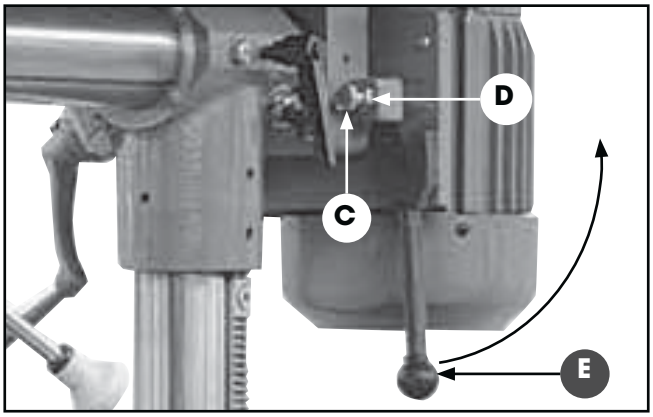

1. Pull the tension lever **E** up to loosen the drive belt.
2. Open the pulley cover and position the belts as per the speed selection chart located inside the pulley cover and shown below.
3. Close the pulley cover and retension the lever **E.**

Note: If the belt tension is too tight or too loose after changing speeds, loosen the jam nut D and adjust the tension bolt C in or out, as needed. Then retighten nut D.

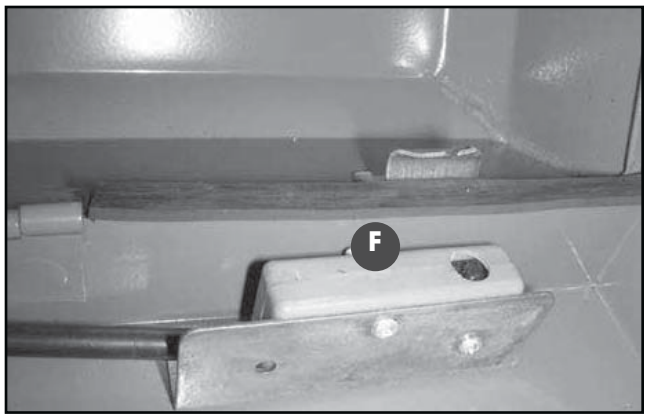

Note: the pulley cover is equiped with a safety interlock F which automatically shuts off the machine when opened. To turn on the drill, make sure the cover is properly closed.

SPEED SELECTION CHART

SPINDLE SPEED

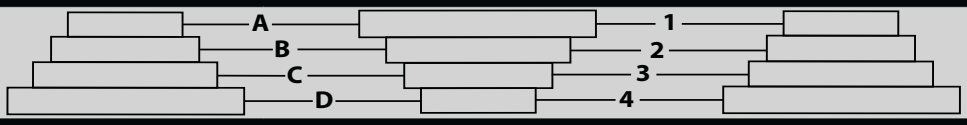

BELT	SPEED (RPM)
A-3	3725
B-3	2660
A-2	1795
D-3	990
B-1	780
C-2	655
D-2	465
C-1	405
D-1	290

SPEED SELECTION GUIDELINES

THE FOLLOWING TABLE CAN BE USED AS A GUIDLINE FOR SELECTING SPEEDS BASED ON BIT SIZE & BIT MATERIAL.					
BIT SIZE	BIT MATERIAL				
	CAST STEEL	TOOL STEEL	CAST IRON	MILD STEEL	ALUM. & COPPER
	CUTTING SPEED				
	40 FT/MIN (12 M/MIN)	60 FT/MIN (18 M/MIN)	80 FT/MIN (24 M/MIN)	100 FT/MIN (30 M/MIN)	200 FT/MIN (60 M/MIN)
DIAMETER	REVOLUTIONS PER MINUTE				
1/16" (2 mm)	1910 - 2445 RPM	2865 - 3665 RPM	3820 - 4890 RPM	4775 - 6110 RPM	9550 - 12225 RPM
1/8" (3 mm)	1220 -1275 RPM	1835 -1910 RPM	2445 - 2545 RPM	3055 - 3185 RPM	6110 - 6365 RPM
3/16" (5 mm)	765 - 815 RPM	1145 - 1220 RPM	1530 - 1630 RPM	1910 - 2035 RPM	3820 - 4075 RPM
1/4" (6 mm)	610 RPM	915 - 955 RPM	1220 - 1275 RPM	1530 - 1590 RPM	3055 - 3180 RPM
5/16" (8 mm)	480 - 490 RPM	715 - 735 RPM	955 - 980 RPM	1195 - 1220 RPM	2390 - 2445 RPM
3/8" (10 mm)	380 - 405 RPM	570 - 610 RPM	765 - 815 RPM	955 - 1020 RPM	1910 - 2035 RPM
7/16" (11 mm)	350 RPM	520 - 525 RPM	700 RPM M/MIN)	870 RPM	1740 - 1745 RPM
1/2" (13 mm)	300 - 305 RPM	440- 460 RPM	590 - 610 RPM	735 - 765 RPM	1470 - 1530 RPM
5/8" (16 mm)	240 - 245 RPM	360 - 365 RPM	480 - 490 RPM	600 - 610 RPM	1200 - 1220 RPM
3/4" (19 mm)	190 - 205 RPM	285 - 305 RPM	380 - 405 RPM	480 - 510 RPM	955 - 1200 RPM

** The information in this chart is supplied as a general guideline only. Your results may vary depending on drill bit material, as well as their quality and sharpness. For best results always follow any speed recommendations supplied with the drill bits being used.*

CHECKLIST BEFORE STARTING

VERIFY THE FOLLOWING CHECK POINTS BEFORE TURNING ON THE DRILL PRESS. FAILURE TO COMPLY CAN RESULT IN SERIOUS INJURIES.

1. Make sure the pulley cover is closed.
2. Check that the chuck is installed properly.
3. Make sure the chuck guard is properly installed and closed.
4. Check to make sure that nothing obstructs the quill from rotating freely.
5. When first starting the drill press check for shaking or vibration and make sure the machine is running smoothly.

BASIC OPERATIONS

DRILLING

ALWAYS USE HOLD-DOWNS OR CLAMPS TO SECURE THE WORKPIECE. THE WORKPIECE SHOULD NEVER BE HELD ONLY BY HAND. TAKE CARE TO USE CLEAN, SHARP BITS.

1. When drilling flat work, place the workpiece on a wooden base and clamp it down against the table.
2. For drilling in wood, machine spur bits are generally preferred.
3. Do not use hand bits, which have a screw tip. At drill press speeds these bits rotate into the workpiece so rapidly that they lift the workpiece off the table and spin it around.

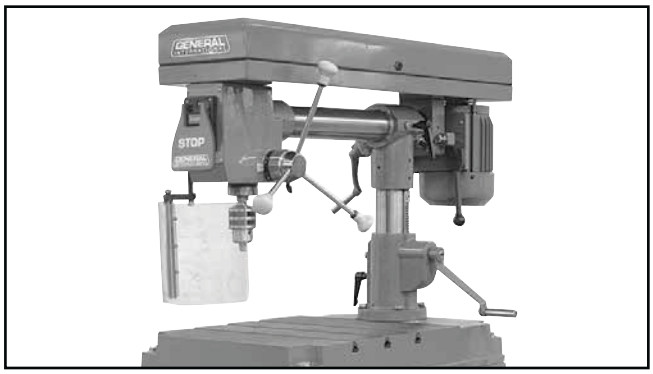

INSTALLING A DRILL BIT

TO AVOID UNINTENTIONAL START-UP, MAKE SURE THAT THE POWER SWITCH IS IN THE "OFF".

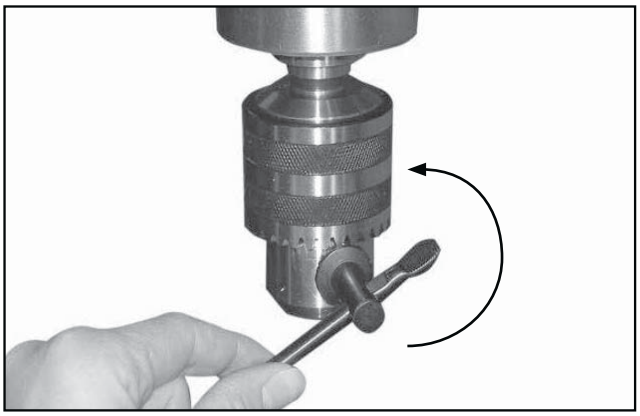

1. Open the chuck guard (not shown). Insert the chuck key and turn counterclockwise to open the chuck jaws.

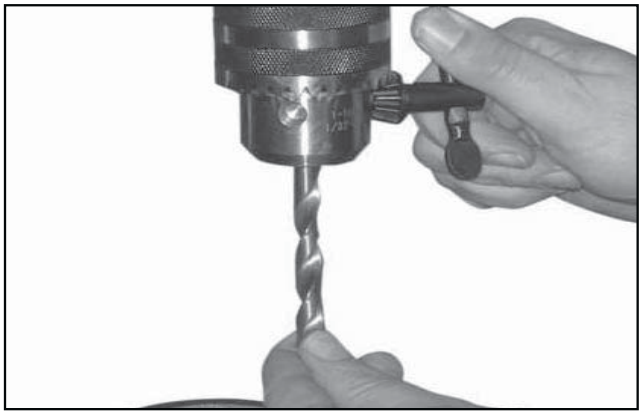

2. Insert a drill bit and turn the chuck key clockwise to close the chuck on the bit.

MAINTENANCE

LUBRICATION

Keep the unit clean and free of dust and debris. Painted surfaces can be wiped with a damp rag.

Periodically lubricate all sliding or moving parts including the column, rack and the quill shown (use any all purpose grease, available at any hardware store).

Note: Bearings in the quill and the V-belt pulley are sealed, permanently lubricated and maintenance free.

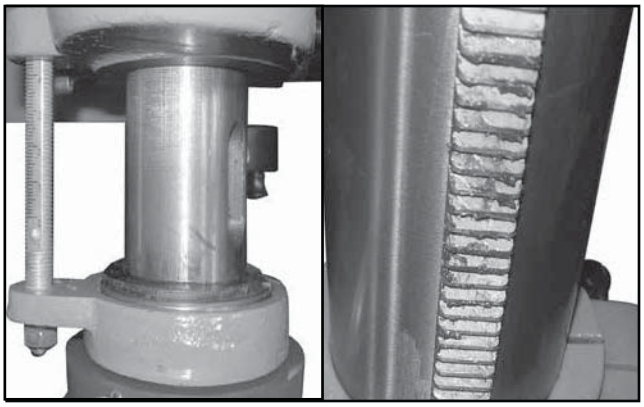

NOTES

TROUBLE SHOOTING

Note: The information in this chart is supplied as a general guideline only.

PROBLEM	PROBABLE CAUSE	POSSIBLE REPAIR
NOISY OPERATION	- Improper belt tension - Dry spindle - Loose spindle pulley - Loose motor pulley	- Adjust tension belt - Lubricate spindle - Check pulley and tighten if nec essary - Tighten pulley set screws
DRILL BIT BURNS	- Improper speed - Chips in the hole - Dull driil bit - Feeding too slow - Bit not lubricated	- Change speed - Clean frequently - Change or sharpen bit - Increase down feed speed - Lubricate drill bit
EXCESSIVE DRILL BIT RUN OUT	- Bent drill bit - Damaged bearings - Drill bit improperly installed - Chuck improperly installed	- Change the drill bit - Replace bearings - Install drill bit properly - Install chuck properly
DRILL BIT GRIPS IN THE WORKPIECE	- Excessive feed pressure - Improper belt tension	- Support work piece or clamp it - Adjust belt tension
QUILL RETURNS TOO SLOW OR TOO FAST	- Spring improperly adjusted - Dust on the quill assembly	- Adjust spring tension - Clean the quill assembly
WORKPIECE MOVES	- Workpiece not clamped down	- Clamp the workpiece to the table
DRILL BIT VEERS OFF HOLE	- Hard grain in wood - Bent drill bit	- Lubricate drill bit - Replace drill bit - Use slower feed speed
WOOD SPLINTERS ON UNDERSIDE (TEAROUT)	- No backing material under the workpiece	- Use backing material