Shower Base

INSTALLATION INSTRUCTIONS

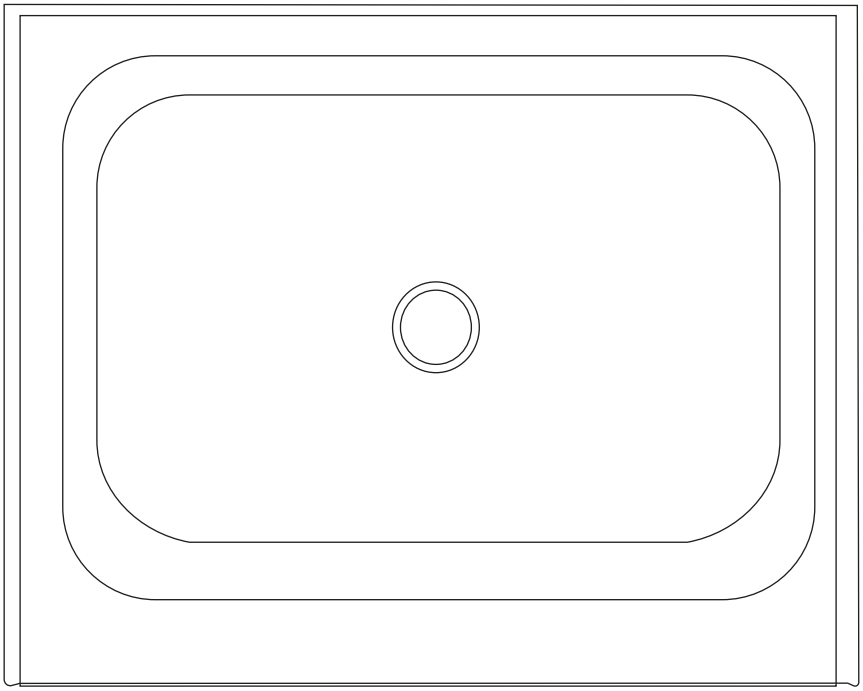

@SwissMadison
#WellMadeForever

PRIOR TO INSTALLATION:

- Inspect shower base to ensure no damages have occurred while in shipping.
- Observe all plumbing and building codes in accordance with your state and local requirements.
- All dimensions are nominal! Be sure to measure your shower base prior to installation.
- The step-by-step guidelines in the installation instructions are a general reference. Should there be any discrepancies, Swiss Madison cannot be held liable. It is recommended to install all Swiss Madison products by hiring a licensed professional.
- Read installation and maintenance instructions thoroughly before installing. Be sure to use proper tools and always wear proper personal safety accessories for your protection.
- Two people are recommended to handle and install this product.
- Make sure all wood studs and supports are properly installed.
- Verify all the necessary plumbing is installed by a certified plumber.
- Floor drain and trap are not included.
- Do not use drywall screws to secure flanges to wall studs. Product damage will occur and will void the warranty. Entire bottom support must be in contact with a flat, level surface.

If you have any questions or concerns please contact us:
1-434-623-4766
info@swissmadison.com

SUGGESTED TOOLS & MATERIALS:

Safety Glasses

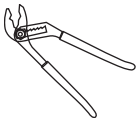
Pliers

Pencil

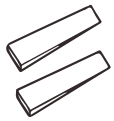
Shims

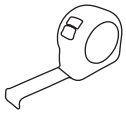
Tape Measure

Plastic Film

Wrench

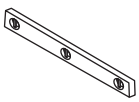
Level

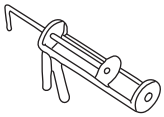
Caulk Gun

Screwdriver

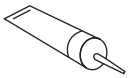
Sealant (1 tube)

1. Rough-In

· Rough plumbing must be pre-installed by a licensed plumber before shower base installation.
· If floor drain-hole installation is needed, contact a licensed plumber.
· Dimensions given during roughing-in are crucial for a proper installation.

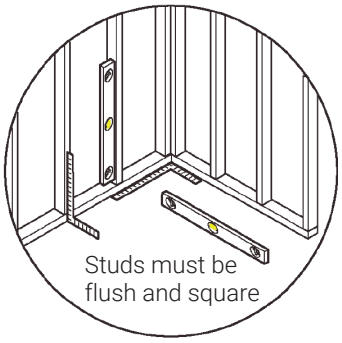

Stud opening tolerance is
+1/4" and -1

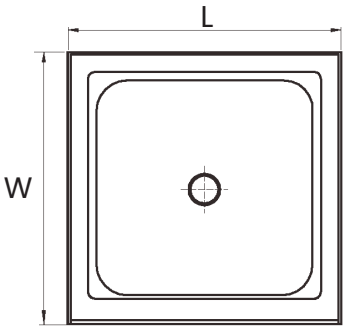

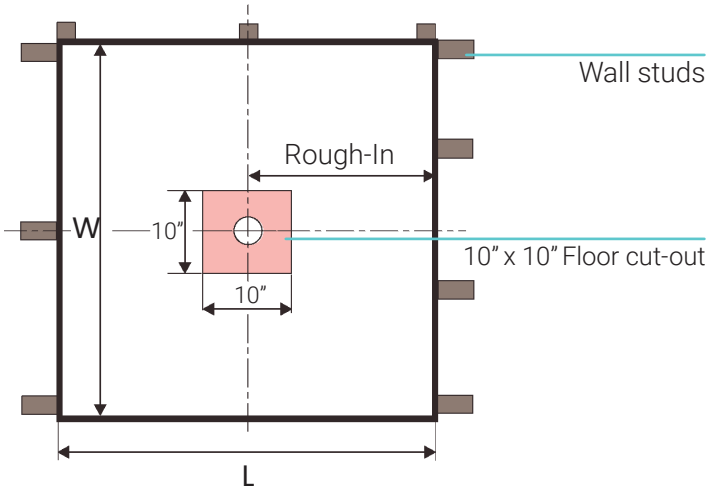

2. Level the Floor

· A) Verify that the shower base is level using the "level" tool on all four sides.
· If the shower base is level proceed to step B.
· If shower base is not level use shims or mortar compound to adjust accordingly. Verify with a level.
· B) Mark drain hole on floor. All in floor plumbing must be installed by a licensed plumber.

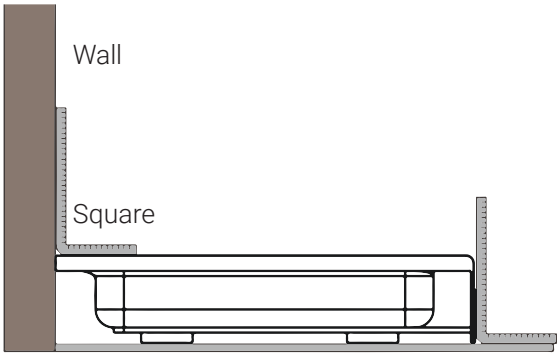

Bottom Support

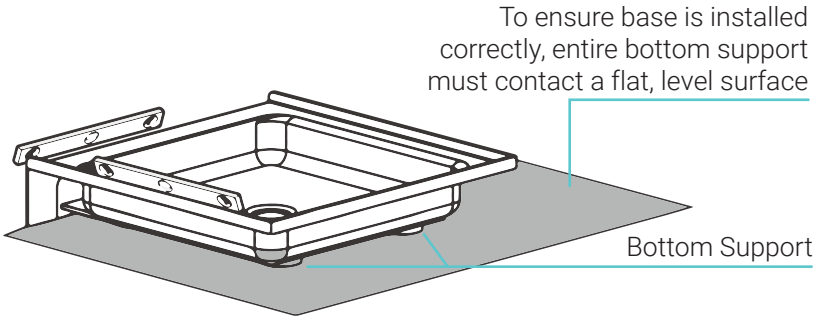

3. Pre-Attach Drain

- Do not discard cardboard ring.
- Remove shower base from dry fit.
- Thread silicone or plumbers putty under drain lip, so when inserted excess sealant will squeeze out from between drain and shower base floor creating an air tight seal.
- Flip shower pan upside down: Add rubber ring then cardboard ring and lastly screw on the plastic ring.
- While holding the bottom of the shower drain in place with split-joint pliers, use shower wrench to tighten the plastic ring until drain sits flush with the shower base floor.
- Use rubbing alcohol and a towel to remove all excess silicone/plumbers putty from around drain lip.

4. Install Shower Base

- Re-insert shower pan into shower cavity making sure that the shower base drain and floor rough-in are aligned.
- Before laying down shower base, fill shower cavity with expanding foam in snake formation. Leave 6-8 inches from end of shower area empty if expanding foam.
- Re-insert shower pan into shower cavity leaving 1/8" (use shims) between wood studs and shower base on all sides.
- Verify shower base is level using level tool on all 4 sides.
  NOTE: Expanding foam generally settles within 10-15 minutes.
- Place drop cloth in bathtub and stand inside the shower base to press it to the floor when securing to the wall studs.

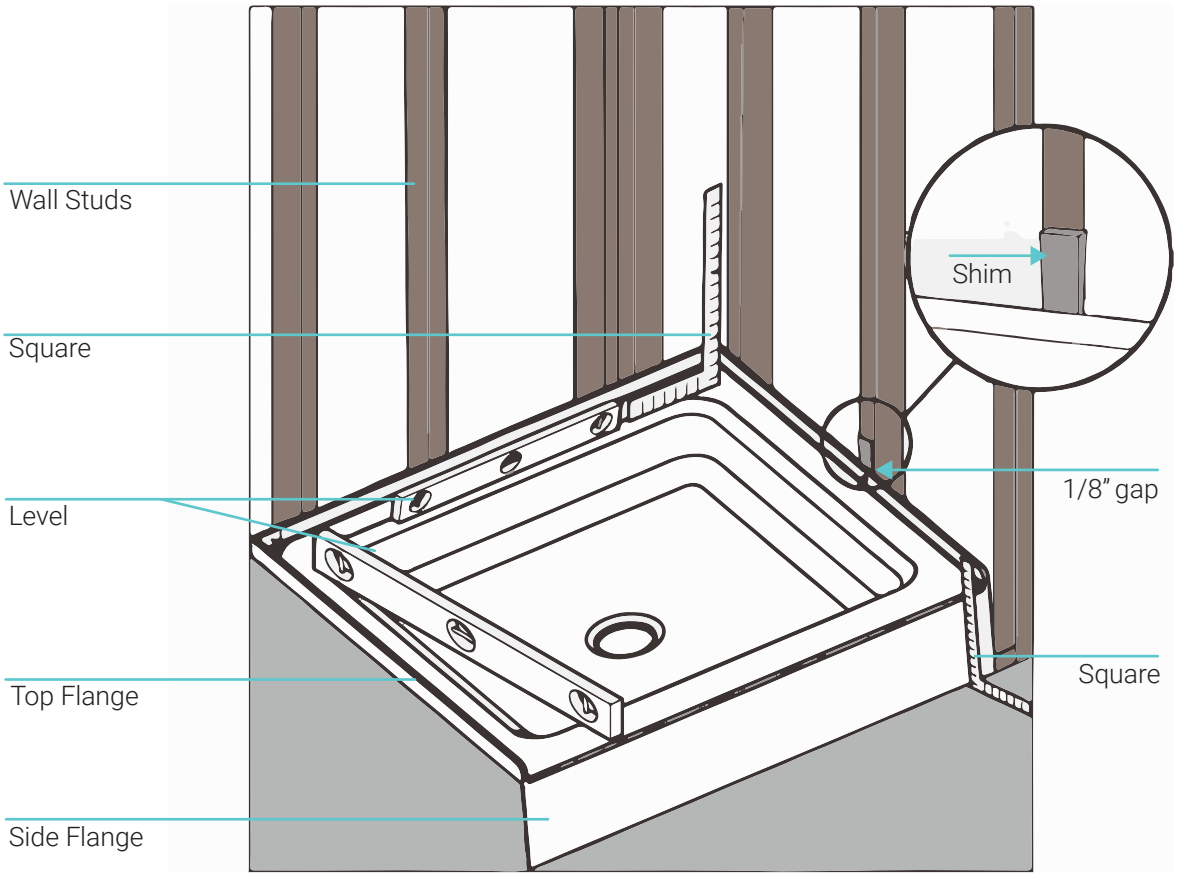

1-434-MADISON
(623-4766)
19 Stults Road
Dayton, NJ 08810
www.swissmadison.com

ONE YEAR LIMITED WARRANTY

Swiss Madison® products are made with quality materials and excellent craftsmanship to provide our customers with beautiful, durable, long-lasting products. Should there be any defects in materials or craftsmanship under regular use that are discovered within the first year of installation, Swiss Madison® will provide replacement parts at no charge, or at its discretion, replace any product or part of the product that is deemed defective, under normal installation, use, service or maintenance. This warranty applies only to the original purchaser. Proof of purchase will be required in the instance of a claim.

Swiss Madison® recommends all installations of Swiss Madison® products to be conducted by a licensed, professional plumber or contractor. Swiss Madison® will not be held responsible for any damage or product failure due to improper installation, misuse, or failure to utilize a licensed professional for installation. Swiss Madison® is not responsible for any installation or removal costs.

This One Year Limited Warranty Will Be Voided If:

- The installation recommendations were not followed by the installer
- The product has been moved from its initial place of installation
- The product has in any way been modified from its packaged state
- The product has been subjected to improper maintenance, abuse, misuse, excessive use of chemicals, accidents, or other damages, etc.

Swiss Madison® makes no implication that its products comply with any local building or plumbing codes. It is the consumer's responsibility and obligation to determine local code compliance prior to and during installation. This warranty extends only to the original purchaser and first consumer.

Swiss Madison® is not responsible for any special, incidental or consequential damages associated with the installation, replacement, return or use of the original purchaser's product. This includes, but is not limited to: freight costs, labor, travel time, lost profit, home damages and other contingent liabilities and costs (including, without limitation, costs associated with 'professionals' or 'experts', investigations, audits, analyses, attorneys and any other professional/hired services).

The Swiss Madison® warranty is a comprehensive and explicit limit of liability. All items not disclosed within the warranty are not addressable within the responsibility of Swiss Madison®. Certain states have variances regarding implied warranties; in those situations, we remain fully compliant.

If you have any questions or concerns, please contact us directly at 1-434-MADISON (623-4766)

WARNING: Contents of your order may contain sharp and possibly other harmful pieces and may cause hazard to children and adults. Swiss Madison® is not responsible in any way for personal damages.