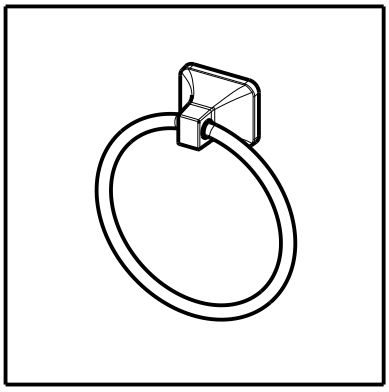

ACCESSORIES

- Futura™ Bath Collection
- Towel Ring

Submitted Model No.: _____

Specific Features: _____

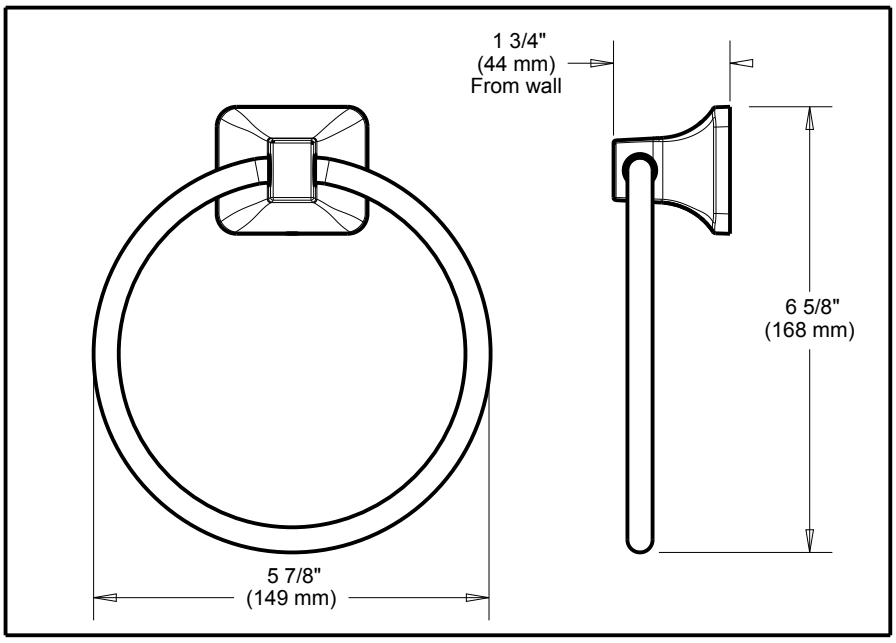

STANDARD SPECIFICATIONS:

- Wood blocking is preferable behind all wall surfaces. If wood blocking is not available, the following fasteners are suggested: Tile/Masonry-Plastic or lead Anchors Plaster/drywall-Toggle bolts.
- Mounting hardware and mounting template included with product.

WARRANTY

- Limited Lifetime Warranty to the original consumer purchaser to be free from defects in material and workmanship.
- Limited Lifetime Warranty for usage in all industrial, commercial and business applications.

Liberty Hardware reserves the right (1) to make changes in specifications and materials, and (2) to change or discontinue models, both without notice or obligation. Dimensions are for reference only. See current full-line price book or www.libertyhardware.com for finish options and product availability.