INSTALLATION INSTRUCTIONS

OUTDOOR WALL LIGHT

READ AND FILLOW SAFETY INFORMATION

Turn off the main power at the circuit breaker before installing and servicing the fixture to prevent possible injury from electric shock.
All electrical connections must be in accordance with local and National Electrical Code (N.E.C.) standards. If you are unfamiliar with proper electrical wiring connections, obtain the services of a qualified electrician.

INSTALLATION & ASSEMBLEY

Remove the fixture and the mounting package from the box and make sure that no parts are missing by referencing the illustrations on the installation instructions.

1. Place the mounting wall plate(3) over the outlet box(1), align the mounting slots of the wall plate with holes of the outlet box as shown. Use a level to ensure the wall plate(3) is straight.
2. Mark the location of the keyhole slots of the wall plate on the wall. Drill a ¼" holes at the narrow end of each keyhole slot marking on the wall. Carefully hammer a wall anchor into each drilled hole.
3. *Pull the supply wires (4 &5) and house ground wire (6) out from the outlet box (1) before* attaching wall plate to outlet box.Make electrical connections, connect the black fixture black wire (10) to the black supply wire (5) and the white fixture wire (9) to the white supply wire (4) using wire nut (7). Connect the fixture ground wire (11) to the supply ground wire (6) together using wire nut (7). Wrap all wire connections with electrical tape to ensure secure connection.

4. Place the fixture base (13) over the mounting wall plate (3) and secure it to the wall plate by using four Waterproof rubber（8）and fixture screws (12) .

5.This outdoor lantern has been permanently installed a photocell(18) switch,photocell turns lantern ON at dusk and automatically turns OFF at dawn,Note:don't cover the photocell switch at anytime.

6. Installation complete, restore power at the circuit breaker and turn light switch on to activate this fixture.

7.After installing the fixture, caulk upper 2/3 of wire connection enclosure to mounting surface. Leave bottom 1/3 un-caulked for drainage of any water that might leak into the enclosure. The manufacturer recommends a non-drying exterior caulking material. A good example is a clear silicone rubber sealant for exterior use.

Care and maintenance – Use dry and clean cloth to wipe the surface of the fixture

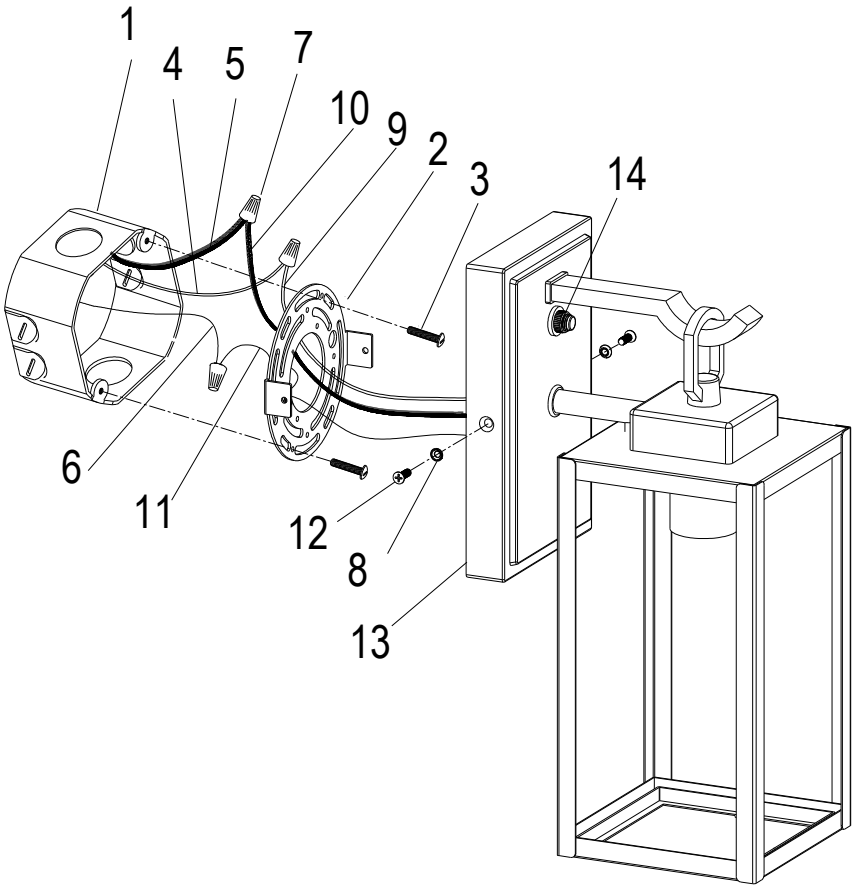

1.OUTLET BOX (EXCLUDED)
2. OUTLET BOX SCREWS
3. MOUNTING WALL PLATE
4. WHITE SUPPLY WIRE
5. BLACK SUPPLY WIRE
6. HOUSE GROUND WIRE
7. WIRE NUTS
8. Waterproof rubber
9. WHITE FIXTURE WIRE
10. BLACK FIXTURE WIRE
11. FIXTURE GROUND WIRE
12.FIXTURE SCREWS
13. FIXTURE BASE
14.PHOTOCELL