OWNER'S MANUAL

English 341 PO

IMPORTANT SAFETY RULES

Read, understand, and follow all instructions carefully before installing and using this product.

SX1500

Krystal Clear™ Sand Filter Pump
Certified Model Number SF90110-2



For illustrative purposes only.

Don't forget to try these other fine Intex products: pools, pool accessories, inflatable pools and in-home toys, airbeds and boats available at fine retailers or visit our website.
Due to a policy of continuous product improvement, Intex reserves the right to change specifications and appearance, which may result in updates to the instruction manual without notice.

INTEX®

IMPORTANT!
DO NOT RETURN PRODUCT TO STORE

To purchase parts and accessories or to obtain non-technical assistance, Visit

www.intexcorp.com

For technical assistance, missing parts or warranty claims call (for U.S. and Canadian Residents):

1-310-549-8235

Monday through Friday, 8:30am to 5:00pm Pacific Time

341-*PO-R0-2607

TABLE OF CONTENTS

Warnings..... **3**

Parts References..... **4-6**

Setup Instructions..... **7-14**

Product Specifications..... **9**

Operating Instructions..... **15-17**

Intex Pools Operating Time Table..... **18**

Non-Intex Pools Operating Time Table..... **19**

Maintenance..... **20**

Long Term Storage..... **20**

Troubleshooting Guide..... **21**

Common Pool Problems..... **22**

General Aquatic Safety..... **23**

Limited Warranty..... **24**

IMPORTANT SAFETY RULES

Read, Understand and Follow All Instructions Carefully Before Installing and Using this Product.

READ AND FOLLOW ALL INSTRUCTIONS

⚠ WARNING

- To reduce the risk of injury, do not permit children to use this product. Always supervise children and those with disabilities.
- Children must stay away from this product and electrical cord(s).
- Assembly and disassembly by adults only.
- Risk of electric shock. Connect only to a grounding type receptacle, this product is provided with a ground-fault circuit interrupter. If replacement of the plug or cord is needed, use only identical replacement parts.
- Always unplug this product from the electrical outlet before removing, cleaning, servicing or making any adjustment to the product.
- The unit is provided with a ground-fault circuit interrupter (GFCI). To test the GFCI, push the test button. The GFCI should interrupt power. Push the reset button, power should be restored. If the GFCI fails to operate in this manner. The GFCI is defective. If the GFCI interrupts power to the pump without the test button being pushed, a ground current is flowing, indicating the possibility of an electric shock. Do not use this pump. Disconnect the pump and have the problem corrected by a qualified service representative before using.
- Do not bury the electrical cord. Locate the cord where it will not be damaged by lawn mowers, hedge trimmers and other equipment.
- To reduce the risk of electric shock, replace damaged cord immediately. Use a qualified electrician to replace the cord.
- To reduce the risk of electric shock, do not use extension cords, timers, plug adaptors or converter plugs to connect unit to electric supply; provide a properly located outlet.
- Do not attempt to plug in or unplug this product while standing in water or when your hands are wet.
- Do not use an appliance leakage current interrupter (ALCI) in place of a GFCI since the ALCI will not protect people.
- Position this product away from pool, so as to prevent children from climbing on it and access the pool.
- Make sure the electrical parameters indicated on the product correspond to the local mains voltage before you connect the unit.
- To reduce the risk of entrapment hazard, never enter the pool if suction strainer component is loose, broken, cracked, damaged or missing. Replace loose, broken, damaged, cracked or missing suction strainer components immediately.
- Never play or swim near suction fittings. Your body or hair may be trapped causing permanent injury or drowning.
- To prevent equipment damage and risk of injury, always turn pump off before changing the filter control valve position.
- Never operate this product above the maximum working pressure stated on the filter tank.
- Hazardous Pressure. Improper tank valve cover assembly could cause the valve cover to blow off and cause serious injury, property damage or death.
- This product is intended to be used only for the purposes described in the manual!

FAILURE TO FOLLOW THESE WARNINGS MAY RESULT IN PROPERTY DAMAGE, ELECTRIC SHOCK, ENTANGLEMENT OR OTHER SERIOUS INJURY OR DEATH.

⚠ CAUTION

This product is for use with storable pools only. Do not use with permanently-installed pools. A storable pool is constructed so that it is capable of being readily disassembled for storage and reassembled to its original integrity. A permanently-installed pool is constructed in or on the ground or in a building such that it cannot be readily disassembled for storage.

To reduce the risk of electric shock the pool must be installed no closer than 6 feet (1.8 m) from any electrical outlet. Do not place portable appliances closer than 5 feet (1.5 m) from the pool.

These product warnings, instructions and safety rules provided with the product represent some common risks of water recreation devices and do not cover all instances of risk and danger. Please use common sense and good judgement when enjoying any water activity.

PARTS REFERENCE

Before assembling your product, please take a few minutes to check the contents and become familiar with all the parts.

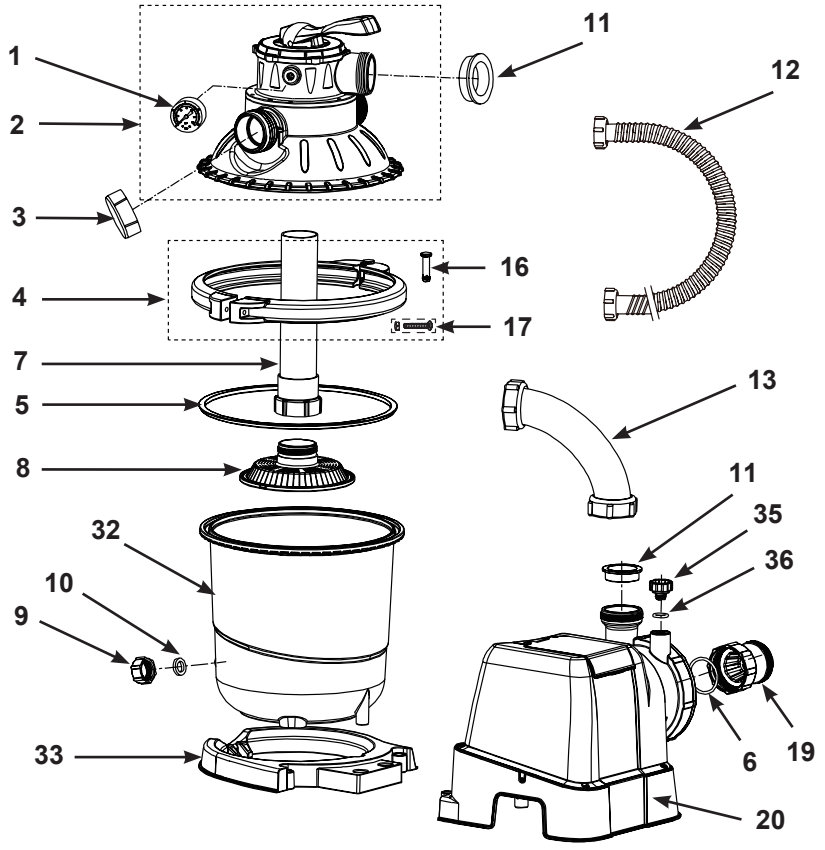

NOTE: Drawings for illustration purpose only. Actual product may vary. Not to scale. No tools are required for the assembly.

PARTS REFERENCE (continued)

Before assembling your product, please take a few minutes to check the contents and become familiar with all the parts.

If the pump was purchased individually, only these inlet fitting parts are included:

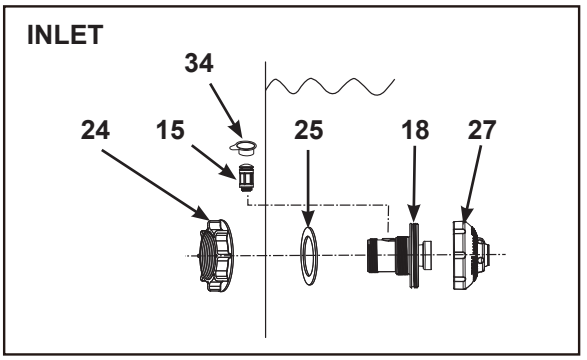

If the pump was purchased as part of a pool set with 1-1/2" (38mm) connections/ hoses, below fitting parts are included:

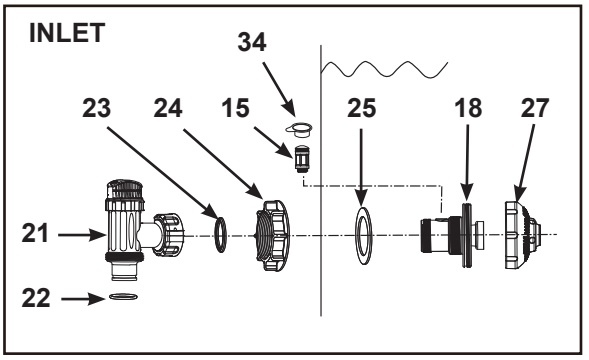

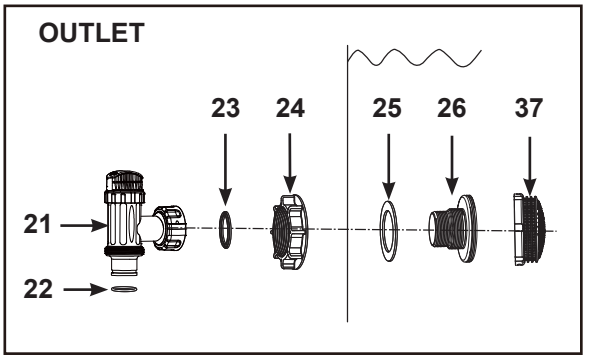

If the pump was purchased as part of a pool set with 1-1/4" (32mm) connections/ hoses, below fitting parts are included:

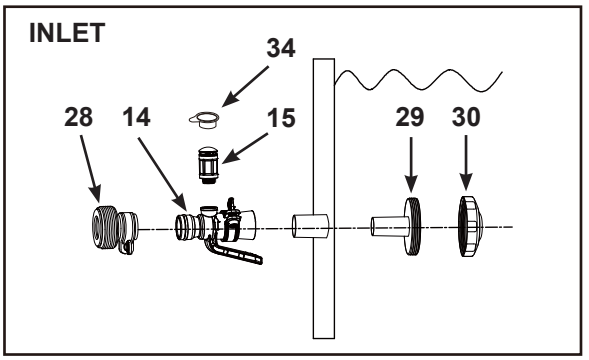

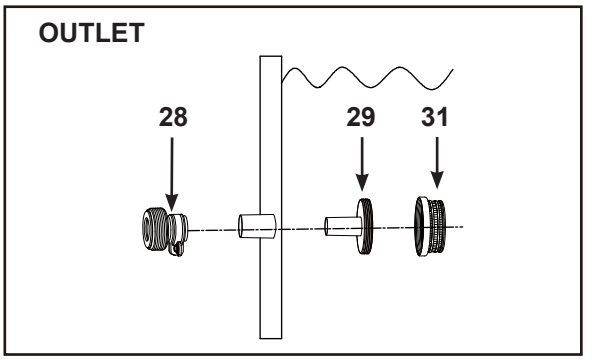

NOTE: Drawings for illustration purpose only. Actual product may vary. Not to scale.
Contact our Authorized Service Centers to order these parts if needed. When ordering parts, be sure to quote the model number and part numbers.

PARTS REFERENCE (continued)

Before assembling your product, please take a few minutes to check the contents and become familiar with all the parts.

REF. NO.	DESCRIPTION	SPARE PART NO.	QTY.		
			Individually	Pool set 1-1/2" (38mm)	Pool set 1-1/4" (32mm)
1	PRESSURE GAUGE	11720	1	1	1
2	TANK COVER & 6-WAY VALVE SET	11721B	1	1	1
3	DRAIN OUTLET COVER	11131	1	1	1
4	CLAMP ASSEMBLY	11722	1	1	1
5	TANK O-RING	11728	1	1	1
6	SAND FILTER PUMP MOTOR INLET O-RING	10712	1	1	1
7	CENTER PIPE	11729	1	1	1
8	FILTER GRID	11730	1	1	1
9	DRAIN VALVE CAP	11456	1	1	1
10	DRAIN VALVE O-RING	11385	1	1	1
11	L-SHAPE O-RING	11228	5	5	5
12	HOSE WITH NUTS	11009	2	2	2
13	SAND FILTER INTERCONNECETING HOSE	11763A	1	1	1
14	POOL INLET AIR ADAPTOR	12368	-	-	1
15	AIR JET VALVE	12363	1	1	1
16	CLAMP PIN	11726	1	1	1
17	CLAMP SCREW	11727	1	1	1
18	INLET THREADED AIR CONNECTOR	12371	1	1	-
19	TRANSPARENT LEAF TRAP	11733	1	1	1
20	PUMP MOTOR	13205EG	1	1	1
21	PLUNGER VALVE (HOSE O-RING & STEP WASHER INCLUDED)	10747	-	2	-
22	HOSE O-RING	10262	-	2	-
23	STEP WASHER	10745	-	2	-
24	STRAINER NUT	10256	1	2	-
25	FLAT STRAINER RUBBER WASHER	10255	1	2	-
26	THREADED STRAINER CONNECTOR	10744	-	1	-
27	ADJUSTABLE POOL INLET JET NOZZLE	12369	1	1	-
28	ADAPTOR B	10722	-	-	2
29	STRAINER CONNECTOR	11070	-	-	2
30	POOL INLET JET NOZZLE	13162	-	-	1
31	STRAINER GRID	11072	-	-	1
32	10" SAND FILTER PUMP TANK	12711	1	1	1
33	10" SAND FILTER PUMP TANK BASE	12715	1	1	1
34	AIR JET VALVE CAP	12373	1	1	1
35	AIR RELEASE VALVE	10725	1	1	1
36	AIR RELEASE VALVE O-RING	10264	1	1	1
37	STRAINER GRID	10253	-	1	-

When ordering parts, be sure to quote the model number and part numbers.

POOL OUTLET - STRAINER & PLUNGER VALVE SETUP (optional)

The strainer grid prevents large objects from jamming and/or damaging the filter pump. If your pool has an inflatable top ring, install the strainer, nozzle and plunger valve before inflating the pool liner top ring. The part numbers here onward refer to the parts depicted in the Parts List section of this manual. To install, do the following:

1. In a counter-clockwise motion unscrew plunger valve union from the threaded strainer connector **(26) (see drawing 1)**. Be careful not to lose the step rubber washer **(23)**. Place the plunger valve on the ground in a safe place.
2. In a counter-clockwise motion unscrew the strainer nut **(24)** from the threaded connector **(26)**. Leave the flat washer **(25)** on the connector **(26)**.
3. Install the strainer and plunger valve at the lower position of pool outlet (marked "+"). From the inside of the pool liner insert the connector **(26)** into one of the pre-cut holes with the washer remaining on the connector to be placed against the inside of the liner wall.
4. Before assembly, lubricate the threads with a petroleum jelly. With the flat side of the strainer nut **(24)** facing the outside wall of the liner in a clockwise motion screw the strainer nut **(24)** back onto the threaded connector **(26) (see drawing 2)**.
5. Finger tighten the strainer nut **(24)** onto the threaded connector **(26)**.
6. Grasp the plunger valve assembly. Make sure the step washer **(23)** is in place.
7. In a clockwise motion screw the plunger valve union back onto the threaded connector **(26) (see drawing 3)**.
8. In a clockwise motion turn the plunger valve handle to close position. Ensure the plunger valve is securely closed. This will prevent water from flowing out during filling of the pool **(see drawing 4)**.

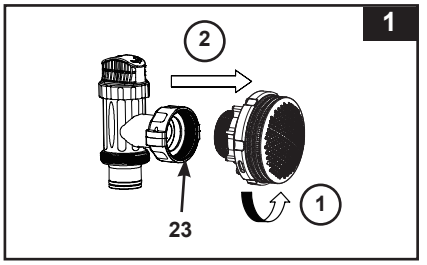

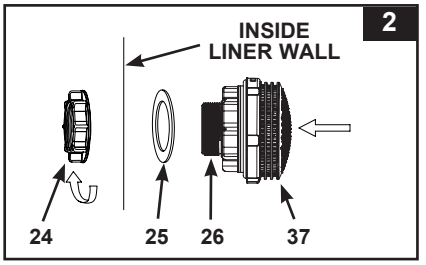

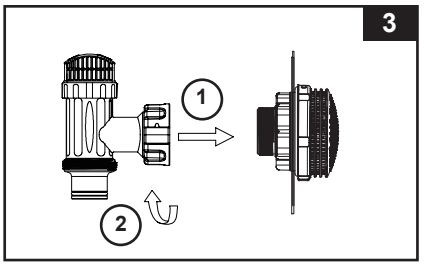

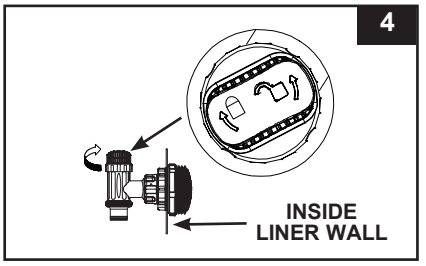

POOL INLET - NOZZLE & PLUNGER VALVE SETUP (optional)

1. In a counter-clockwise motion unscrew plunger valve union from the inlet threaded air connector **(18) (see drawing 5)**. Be careful not to lose the step rubber washer **(23)**. Place the plunger valve on the ground in a safe place.
2. In a counter-clockwise motion unscrew the strainer nut **(24)** from the inlet threaded air connector **(18)**. Leave the flat washer **(25)** on the connector **(18)**.
3. Install the nozzle and plunger valve at the upper position of pool inlet. From the inside of the pool liner insert the nozzle union **(18 & 27)** into one of the pre-cut holes with the washer remaining on the connector to be placed against the inside of the liner wall.
4. Before assembly, lubricate the threads with a petroleum jelly. Then, with the flat side of the strainer nut **(24)** facing the outside wall of the liner in a clockwise motion screw the strainer nut **(24)** back onto the inlet threaded air connector **(18) (see drawing 6)**.
5. Finger tighten the adjustable pool inlet jet nozzle **(27)** and the strainer nut **(24)** onto the inlet threaded air connector **(18)**.
6. Grasp the plunger valve assembly. Make sure the step washer **(23)** is in place.
7. Screw the air jet valve **(15)** over the inlet threaded air connector **(18)**. **NOTE:** Make sure the air jet valve is securely tighten and facing up. In a clockwise motion screw the plunger valve union back onto the inlet threaded air connector **(18) (see drawing 7)**.
8. In a clockwise motion turn the plunger valve handle to close position. Ensure the plunger valve is securely closed. This will prevent water from flowing out during filling of the pool **(see drawing 8)**.
9. Adjust the direction of nozzle head pointing away from the pool outlet for a better circulation result **(see drawing 9)**.
10. The pool liner is now ready to fill with water. Consult the above-ground-pool owner's manual for filling instructions.

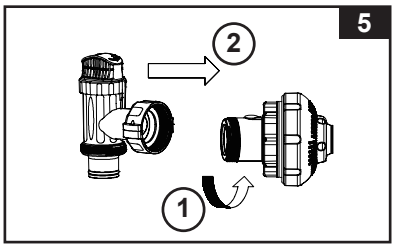

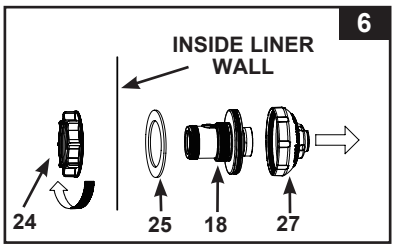

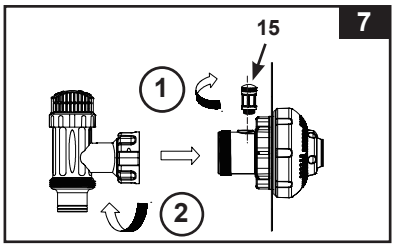

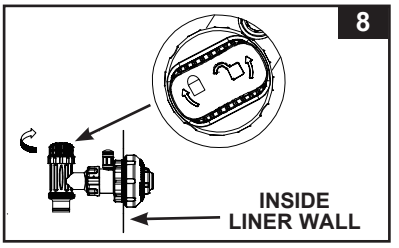

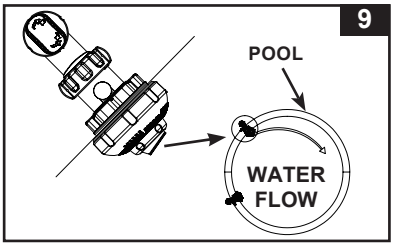

NOTE: Do not cover the air jet valve **(15)** with the valve cap **(34)** under normal situation or when the pump is operating. See Troubleshooting Guide section for more details.

PRODUCT SPECIFICATIONS

The sand filter removes suspended particles but does not sanitize your pool. Pool chemistry is a specialized area and you should consult your local pool service specialist for details.

Power:	110-120 Volt AC
Amperage:	1.2 A
Maximum working pressure:	1.4 bar (20 psi)
Effective filtering area:	0.05 m^2 (0.54 ft^2)
Maximum Flow Rate:	4000 liters/hour (1050 gallons/hour)
Recommended filtering media: (Not included)	No. 20 silica sand or glass sand. Particle size range 0.45 to 0.85 mm (0.018 to 0.033 inches). Uniformity Coefficient less than 1.75.
Recommended filtering media quantity:	No. 20 silica sand 12 Kg (26 Lbs), glass sand 8.5 Kg (18.5 Lbs), or fiber ball 350 g (0.77 Lbs).
Limited Warranty:	see "Limited Warranty"

SETUP INSTRUCTIONS

TOOLS REQUIRED: One (1) Phillips screwdriver
Pump location and mounting:

- **The system must be installed on a solid level and vibration-free base.**
- **Provide a location protected from the weather, moisture, flooding and freezing temperature.**
- **Provide adequate access, space and lighting for routine maintenance.**
- **Pump motor requires free circulation of air for cooling. Do not install the pump in a damp or non-ventilated location.**

A team of 2 or more people is recommended for setting up this product.

Leaf trap setup:

1. Make sure the pump o-ring **(6)** is in place. In a clockwise motion screw the leaf trap **(19)** onto the motor inlet **(see drawing 10)**.

Sand tank installation:

1. Place the tank support base at the selected location.
2. Place the tank on the tank support base **(see drawing 11.1)**.

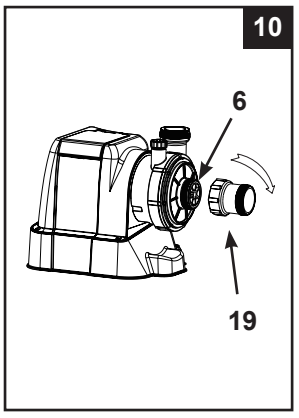

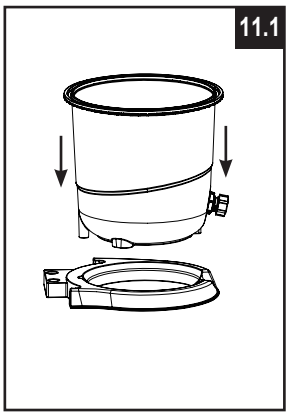

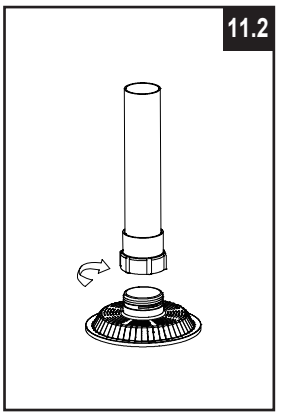

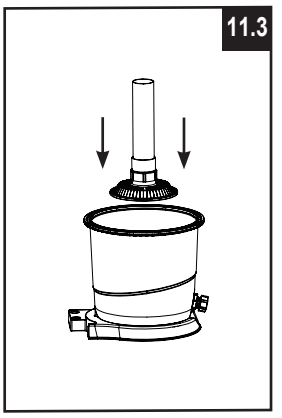

SETUP INSTRUCTIONS (continued)

3. In a clockwise motion screw the center pipe **(7)** onto the filter grid **(8)** securely by hand **(see drawing 11.2)**.
4. Vertically insert the filter grid and center pipe assembly into the tank. Ensure filter grid assembly is securely fitted to the bottom of the tank, and the center pipe is vertically centered inside the tank **(see drawing 11.3)**.

Sand loading:

IMPORTANT: Use No. 20 silica sand or glass sand with particle size range 0.45 to 0.85 mm (0.018 to 0.033 inches) and a Uniformity Coefficient less than 1.75.
Only use the filter media specified by the manufacturer.

NOTE: Before loading the tank with sand, ensure the sand filter grid and center pipe assembly is securely in place on the tank bottom, and the center pipe (7) is vertically centered inside the tank.

1. To prevent sand from falling into the center pipe top opening when pouring the sand, cover the center pipe top opening with a cup or similar object **(see drawing 12)**.
2. With one person holding the center pipe to keep it centered, pour the sand into the tank at a slow rate manually to prevent the filter grid assembly from shifting **(see drawing 13)**.

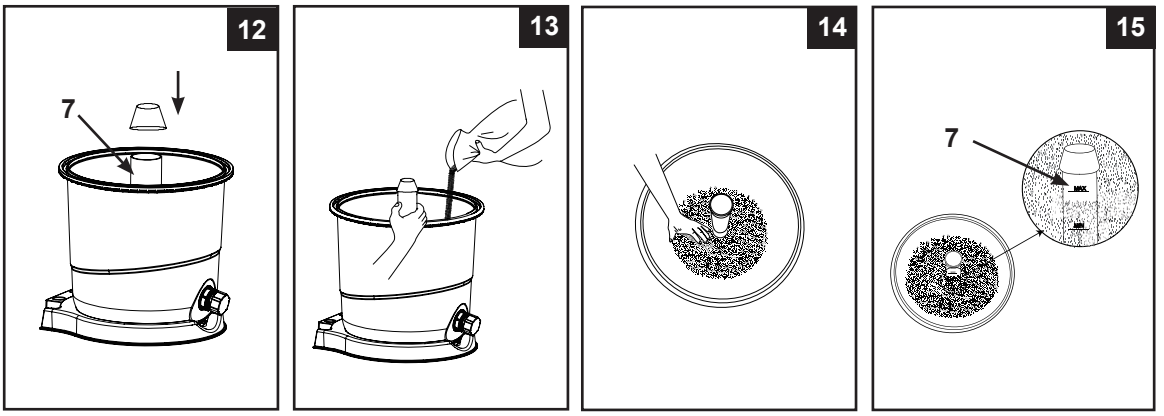

3. Fill the tank approximately half way first to evenly distribute the sand inside the tank, then fill the tank with some water to provide a cushioning effect when the remaining sand is poured in. This prevents the filter grid **(8)** from excessive shock **(see drawing 14)**.
4. Sand shall be filled between the "MAX" and "MIN" marked gauge on the center pipe. Evenly spread and level out the sand by hand **(see drawings 14 & 15)**.
5. Remove the protective cup from the center pipe top opening.
6. Wash away all sand around the top edge of the tank.

IMPORTANT: Ensure the center pipe (7) remains centered after sand loading is completed before proceeding to the next step.

SETUP INSTRUCTIONS (continued)

⚠ WARNING

Improper tank valve and clamp assembly could cause the valve and clamp to blow off and cause serious injury, property damage or death.

6-way valve installation:

1. Make sure the tank o-ring **(5)** is in place **(see drawing 16)**. **NOTE:** Ensure the tank o-ring is free of sand or debris.
2. Lower the 6-way valve cover over the tank slowly, and ensure the bypass pipe protruding underneath the 6-way valve cover fits securely into the center pipe **(7)** top opening **(see drawing 17)**. Make sure the tank o-ring is securely fitted between the top edge of the tank groove and the 6-way valve cover edge. **IMPORTANT:** Ensure the 6-way valve cover ridge is aligned with the groove on the tank rim.

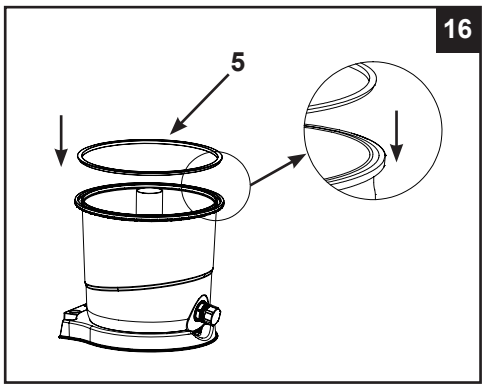

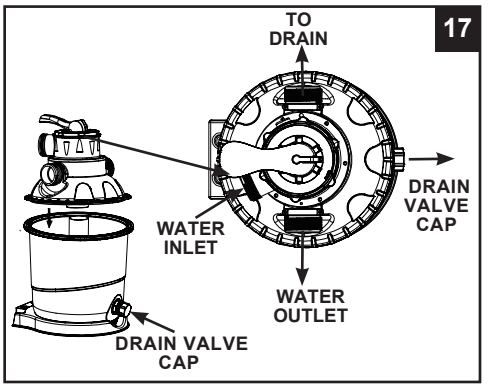

IMPORTANT: There are three hose connection ports on the 6-way valve, ensure the outlet connection (from filter to the pool) on the valve is facing towards the pool (see drawing 18).

3. Remove the screw, and install the clamp around the tank and 6-way valve flanges, then replace the screw and use a phillips screwdriver (not included) to tighten it **(see drawings 18 & 19)**.

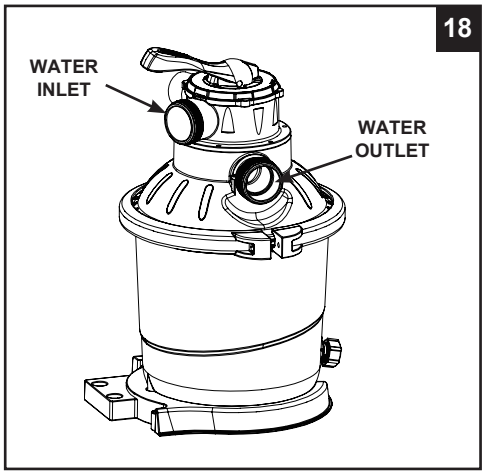

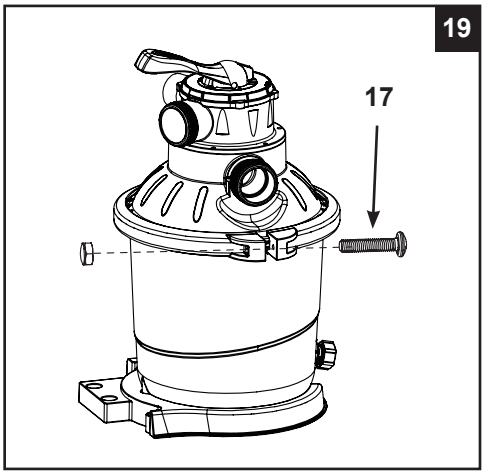

SETUP INSTRUCTIONS (continued)

Motor installation:

1. Place an L-shape o-ring **(11)** on the pump motor outlet. In a clockwise motion connect the sand filter interconnecting hose **(13)** to the pump motor outlet **(see drawing 20)**.
2. Connect the pump motor unit to the tank support base **(see drawing 21.1)**. **NOTE:** Ensure the leaf trap water inlet hose connection is facing towards the pool.
   IMPORTANT: Some countries, especially in the European community, require the product to be secured to the ground or to a base in a permanent upright position. Check your local authorities to determine if there is a regulation in your area regarding above-the-ground swimming pool filter-pumps. If yes, then the product can be mounted to a platform using the two holes located in the base. See drawing 21.2. The product can be mounted on a cement base or onto a wooden platform to prevent accidental falling over.
   - **The mounting holes are 6.4 mm in diameter and spaced 196.5 mm apart.**
   - **Use two bolts and lock nuts with a maximum of 6.4 mm in diameter.**
3. Place an L-shape o-ring **(11)** on the 6-way valve inlet connection. In a clockwise motion connect the sand filter interconnecting hose **(13)** to the 6-way valve inlet connection **(see drawing 22)**.

20

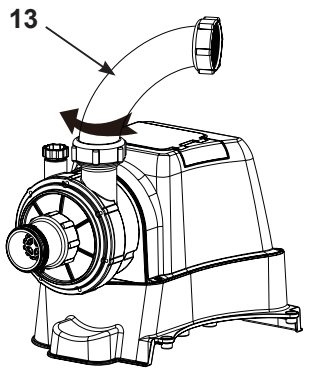

21.1

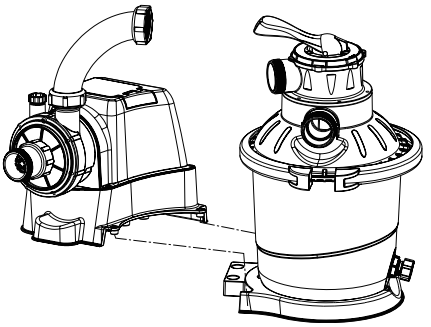

21.2

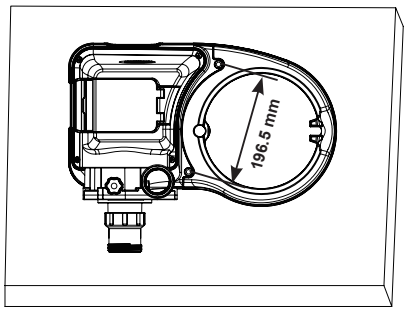

22

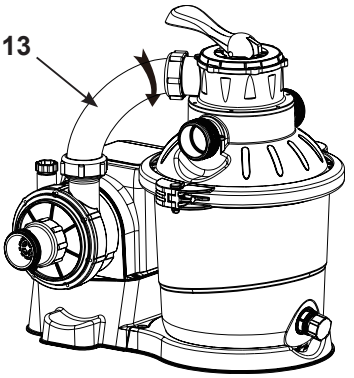

SAND FILTER PUMP HOSE CONNECTION SETUP

⚠ WARNING

- **Position this product away from the pool, so as to prevent children from climbing on it and accessing the pool.**

The 6-way valve has three hose connection ports.

1. Connect one hose **(12)** end to the pre-filter inlet and the other end of the hose to the lower connector with the strainer. Ensure the hoses are securely tightened.
2. Connect the second hose **(12)** between the 6-way valve water outlet and the upper connector with the inlet-nozzle. Ensure the hoses are securely tighten.
3. The third hose connection port (drain/waste outlet) on the 6-way valve shall be directed to a proper draining receptacle using a hose or pipe (not provided). Remove the drain cap before attaching the drain/waste hose or pipe.
4. The sand filter pump is now ready to filter the pool.

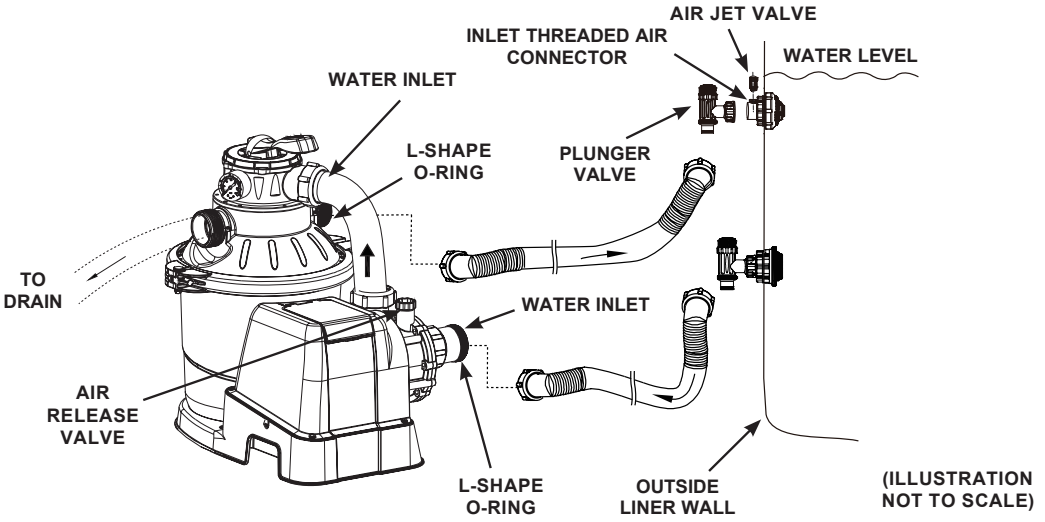

For Pools with Dual Suction Outlets Configuration:
In order to comply with the requirement of the Virginia Grahame Baker Act (for USA and Canada), your pool is designed with dual suction outlets and one inlet fittings. Parts in grey highlight on this page are supplied with the pool set package and are shown here for assembly purposes only. If this pump was purchased as part of a pool set, refer to the pool owner's manual for more details.

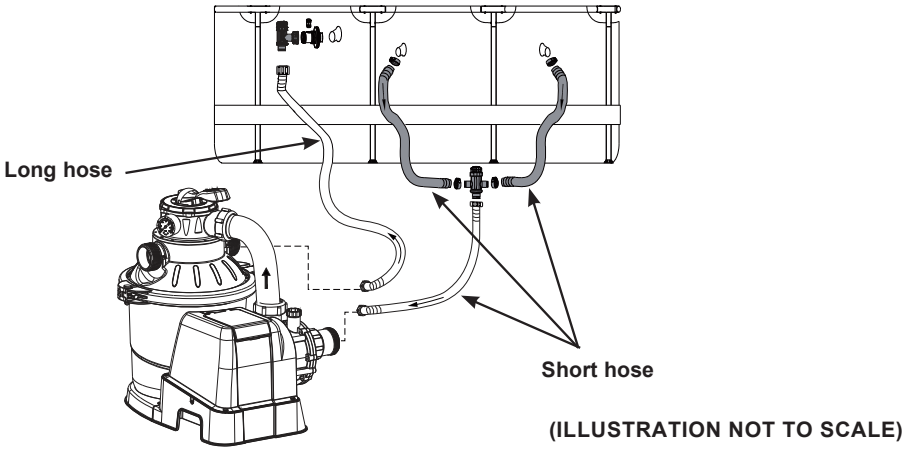

SAND FILTER PUMP HOSE CONNECTION SETUP (continued)

For NON-INTEX pool:
Connect the hose **(12)** to the pool inlet/outlet connection with a large hose clamp. Tighten securely.

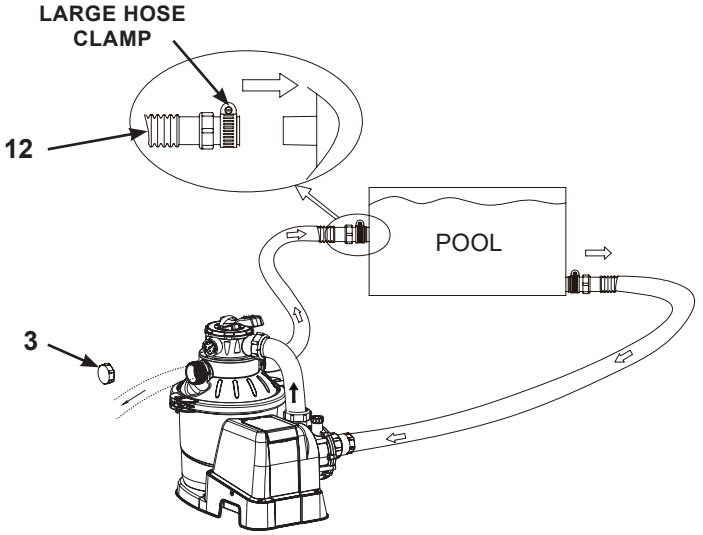

For INTEX pool with 1-1/4" (32mm) connections/hoses:
Make sure the air jet valve **(15)** is securely tighten onto the pool inlet air adaptor **(14)** and facing up.

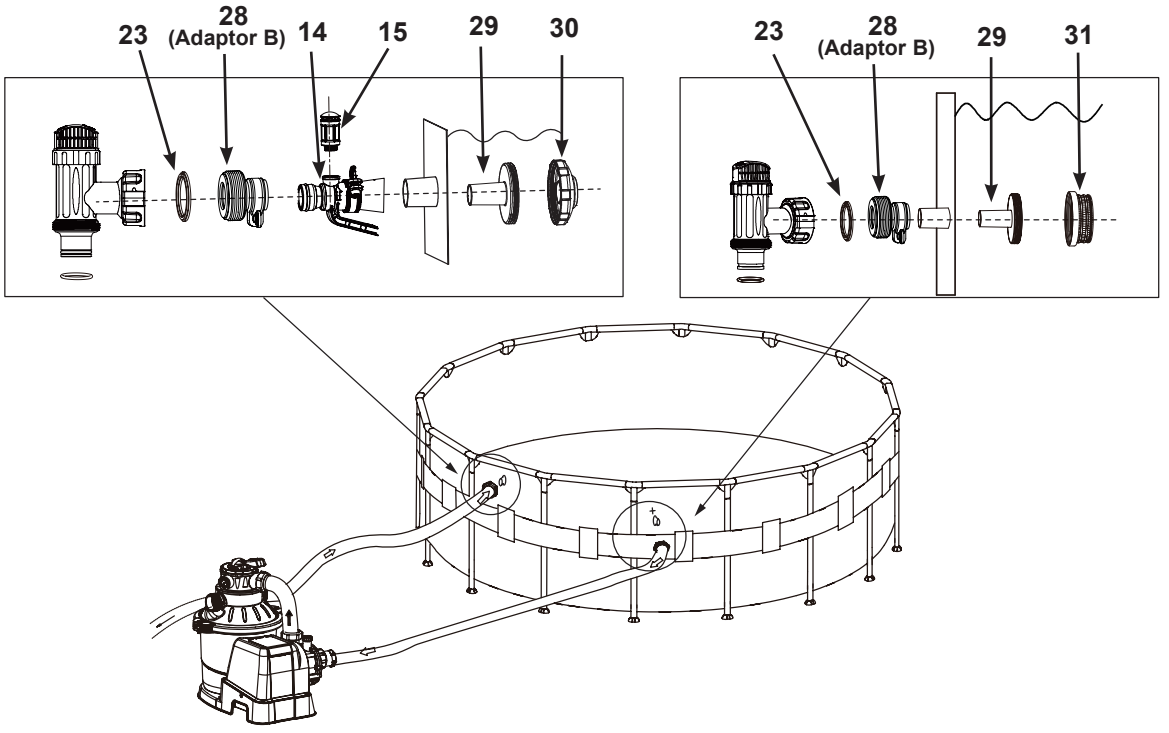

OPERATING INSTRUCTIONS

⚠ WARNING

- **Risk of electric shock. Connect this product only to a grounding type receptacle protected by a ground-fault circuit interrupter (GFCI) or residual current device (RCD). Contact a qualified electrician if you cannot verify that the receptacle is protected by a GFCI/RCD. Use a qualified electrician to install the GFCI/RCD, which has a maximum rate of 30 mA. Do not use a portable residual current device (PRCD).**
- **To reduce the risk of electric shock, do not use extension cords, timers, plug adaptors or converter plugs to connect unit to electric supply; provide a properly located outlet.**
- **Do not attempt to plug in or unplug this product while standing in water or when your hands are wet.**
- **Never operate this product above the maximum working pressure stated on the filter tank.**
- **Always switch off pump before changing the 6-way valve position.**
- **Operating this product without water flowing through the system can cause a build up of hazardous pressure which can result in an explosive situation, serious injury, property damage or death.**
- **Never test this pump with compressed air. Never operate the system with water temperature above 35°C (95°F).**

6-way valve positions and function:

Valve Position	Function	Water Flow Direction
FILTER (see drawing 23)	Normal filtration and regular vacuuming of pool	From pump through filter media to pool
BACKWASH (see drawing 24)	Reverses water flow to clean filter media	From pump through filter media to valve waste/drain outlet
RINSE (see drawing 25)	For initial startup cleaning of the sand, and leveling the sand bed after backwashing	From pump through filter media to valve waste/drain outlet
WASTE (see drawing 26)	For vacuuming directly to waste, lowering pool level or to drain the pool	From pump to valve waste/drain outlet bypassing the filter media
RECIRCULATE (see drawing 27)	For circulating water back to pool without going through the filter media	From pump through valve to pool bypassing the filter media
CLOSED (see drawing 28)	Shuts off all flow to filter and pool **"Do not use this setting with pump running"**	

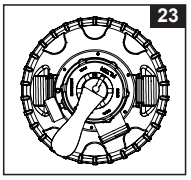

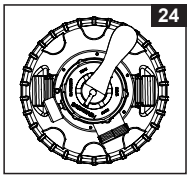

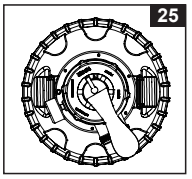

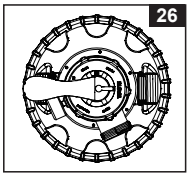

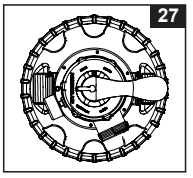

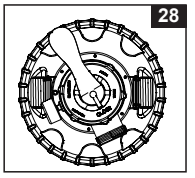

Control panel description:

ON / OFF button	LOCK / UNLOCK button	TIMER button

LED Reading	Definition
00	Stand-by mode (start-up / operating cycle finished)
01	Minimum operating hour (1 hour remaining)
02-11	Operating hours (2 – 11 hours remaining)
12	Maximum operating hours (12 hours remaining)
FP	Timer OFF (pump operating continuously)
•	Power saving mode

OPERATING INSTRUCTIONS (continued)

Initial startup and operation:
Before operating, be sure that:

- All the hoses have been connected and tightened securely, and correct amount of filter sand have been loaded.
- The entire system is connected to a grounding type receptacle protected by a ground-fault circuit interrupter (GFCI) or residual current device (RCD).

⚠ CAUTION

The filter control valve has a closed position. The pump should never be on when the valve is in the closed position. If the pump is operated with the valve closed, explosive situation could exist.

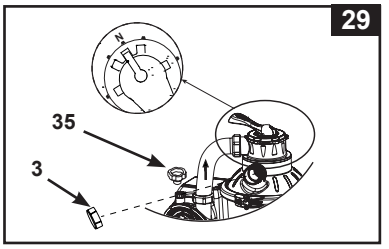

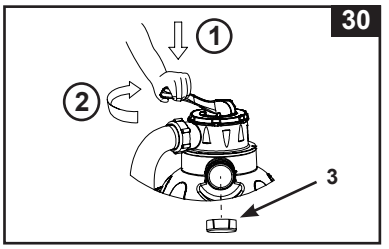

1. Turn both plunger valve handles fully counter-clockwise until they stop. This opens the valves to allow water to flow into the sand filter pump.
2. **Release air from the system -** Ensure the drain/waste outlet on the 6-way valve is not covered and directed to a proper draining receptacle, and the pump is off. Turn the 6-way valve to the "N" position and unscrew the air release valve **(35)** from the motor housing **(see drawing 29)**. When water starts flowing out of the air release valve hole, close the air release valve back.
3. **BACKWASH** - Ensure the drain/waste outlet on the 6-way valve is not covered and directed to a proper draining receptacle, and the pump is off. Depress the 6-way valve and turn it to the "**BACKWASH**" position **(see drawings 24 & 30)**.
   IMPORTANT: To prevent damage to the 6-way valve, always depress the valve handle before turning. Always switch off pump before changing the 6-way valve position.
4. Press ⏻ to switch on the system, and then press ⏲ to set the operating TIMER hours (see "Operating the system under TIMER mode or manually" section for details). Water is circulating backward through the sand media and to waste/drain outlet. Backwash until a clear flow of water is observed in the waste/drain outlet.
   NOTE: If the LED display flashes "00", the device is in stand-by mode and the pump will not operate. The initial backwash of the filter is recommended to remove any impurities or fine sand particles in the sand media.
5. Switch off the pump, change the 6-way valve to "RINSE" position **(see drawing 25)**.
6. Switch on the pump and run the pump for about one minute to level out the sand bed after backwashing the sand media.
7. Switch off the pump, change the 6-way valve to "FILTER" position **(see drawing 23)**.
8. Switch on the pump. The system is now operating in the normal filtering mode. Run the pump until the desired pool water clearance is obtained and no more than 12 hours per day. For the initial startup, it is recommended setting the system to a longer TIMER operating hours or "FP" for the pump to operate continuously without the TIMER.
9. Record the initial pressure gauge reading when the filter media is clean.
   NOTE: During initial setup of the system, it may be necessary to backwash frequently due to unusual heavy dirt present in the water and sand. After that, as the filter removes dirt and impurities from the pool water, the accumulated dirt in the sand media will cause the pressure to rise and the flow to diminish. If there is no vacuuming device attached to the system and the pressure gauge reading is in the yellow zone it is time to backwash the sand media, see "BACKWASH" under "initial startup and operation" section. Vacuuming device (i.e. Intex auto pool cleaner) attached to the system may also cause the flow to diminish and the pressure to rise. Remove any vacuuming device from the system and check if the pressure gauge reading has dropped from the yellow zone to the green zone.
10. Monitor the pressure gauge reading, and check that the inlet and outlet openings are not obstructed on a weekly basis. If the pressure gauge indicates yellow it is time to backwash the filter media.

OPERATING INSTRUCTIONS (continued)

Operating the system under "TIMER" mode or manually:

To operate the sand filter pump in "FILTER" mode under "TIMER" control:

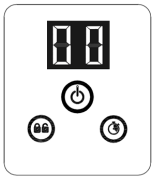

1. **Activate the unit:**
   Press ⏻ button. Flashing code "00" appears on the LED display, indicating that the unit is ready to be programmed.
2. **Set operating hours:**
   With code "00" flashing, press ⏱ button to set the desired operating hours. See the "Operating Time Table" for the required operating hours related to each pool size. Pressing ⏱ will increase the time from 01 to 12 hours maximum. If you have selected too many hours keep pressing ⏱ to repeat the cycle. The built-in timer will now activate the Sand filter pump, at the same time each day, for the number of hours you have set.

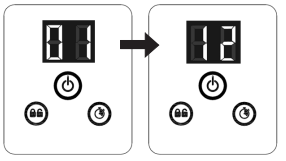

(1 to 12 hours max per cycle)

3. **Lock keypad controls:**
   With the desired hour value showing, press 🔒 button until you hear a "beep". Locking the control buttons into this setting prevents unauthorized changing of the operating cycle.
   NOTE: If you forget to lock the keypad controls, the system will automatically lock it and start working 10 seconds later.
   The sand filter pump is now filtering the water and will stop after the operating hours are completed.
4. **Readjust operating time if necessary:**
   The operating hours can be re-adjusted if necessary. Press 🔒 button until you hear a "beep" to unlock the keypad and the current programmed time will flash. Repeat steps 2 to 3.
5. **Stand-by/power saving mode:**

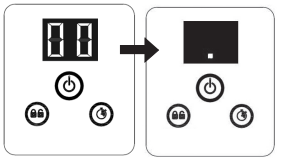

- When the cycle ends, the LED display shows "00". The system is now in Stand-By mode. After 5 minutes the system goes into Power Saving mode and the LED display shows ".". The system will automatically turn itself back on in 24 hours.
- While the system is in Power Saving mode, press any button and the system will briefly display the programmed time and then "00".

To view the TIMER preset hours:

While the pump is operating, press " 🔒 " button, the display will briefly flash the preset hours for 10 seconds and then display back the remaining operating hours.

To operate the sand filter pump manually (without the "TIMER" mode):

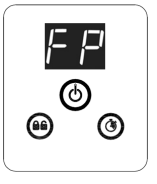

1. To run the pump alone without the "Timer", press ⏻ button to turn on the pump, then press ⏱ button until the LED displays "FP", this indicates that the TIMER is off and the pump is now operating continuously.
2. To stop the pump, press ⏻ button again.

INTEX POOLS OPERATING TIME TABLE (WITHOUT INTEX SALTWATER SYSTEM)

This table shows the required operating time for average use of the sand filter pump with above ground pools.
If the system is attached to an "Intex Saltwater System" unit, the filter pump running time should be longer than the required operating time of the Intex Saltwater System unit.

Pool Size		Water Capacity (Calculated at 90% for Frame Pool and 80% for Easy Set & Oval Pool)		Sand filter pump operating time (For one cycle) / (Hours)
		(Gals)	(Liters)	
INTEX ABOVE GROUND POOLS (AGP's)				
EASY SET® POOL	15' x 33" (457cm x 84cm)	2587	9792	3
	15' x 36" (457cm x 91cm)	2822	10681	3
	15' x 42" (457cm x 107cm)	3284	12430	4
	15' x 48" (457cm x 122cm)	3736	14141	4
	16' x 42"(488cm x 107cm)	3754	14209	4
	16' x 48" (488cm x 122cm)	4273	16173	5
	18' x 42" (549cm x 107cm)	4786	18115	5
	18' x 48" (549cm x 122cm)	5455	20647	6
	18' x 52" (549cm x 132cm)	5894	22309	6
ROUND METAL FRAME POOL	12' x 36" (366cm x 91cm)	2086	7896	2
	15' x 36" (457cm x 91cm)	3282	12422	4
	15' x 42" (457cm x 107cm)	3861	14614	4
	15' x 48" (457cm x 122cm)	4440	16805	5
	16' x 48" (488cm x 122cm)	5061	19156	5
	18' x 48" (549cm x 122cm)	6423	24311	7
	18' x 52" (549cm x 132cm)	6981	26423	7
ULTRA FRAME POOL	12' x 36" (366cm x 91cm)	2086	7896	2
	14' x 48" (427cm x 122cm)	3861	14614	4
	16' x 48" (488cm x 122cm)	5061	19156	5
	18' x 48" (549cm x 122cm)	6423	24311	7
	18' x 52" (549cm x 132cm)	6981	26423	7
GRAPHITE GRAY PANEL POOL SET™	16'8" x 49" (508cm x 124cm)	5061	19156	5
	18'8" x 53" (569cm x 135cm)	6981	26423	7
OVAL FRAME POOL	18' x 10' x 42" (549cm x 305cm x 107cm)	2885	10920	3
	20' x 12' x 48" (610cm x 366cm x 122cm)	4393	16628	5
	24' x 12' x 48" (732cm x 366cm x 122cm)	5407	20465	6
	28' x 12' x 48" (853cm x 366cm x 122cm)	6420	24300	7
RECT. ULTRA FRAME POOL	15' x 9' x 48" (457cm x 274cm x 122cm)	3484	13187	4
	18' x 9' x 52" (549cm x 274cm x 132cm)	4545	17203	5

NOTE: The timer setting has an additional 10 minutes over the actual setting.

NON-INTEX POOLS OPERATING TIME TABLE

This table shows the required operating time for average use of the sand filter pump with above ground pools.

Water Capacity		Sand filter pump operating time (For one cycle)
(Gals)	(Liters)	(Hours)
2000	7570	2
3000	11355	3
4000	15140	4
5000	18925	5
6000	22710	6
7000	26495	7
8000	30280	8

POOL CARE & CHEMICALS

- All pools require care to keep the water clear and hygienically clean. With proper chemical control, your filter will help attain this objective. Consult your pool supply dealer for instructions regarding the proper use of chlorine, algaecide and other chemical agents required for sparkling clear water.
- Keep pool chemicals away from children.
- Do not replenish chemicals in pool while pool is occupied. Skin or eye irritations could occur.
- Daily pH checking and chemical treatment of the water is very important and cannot be overemphasized. Chlorine, algaecide and maintenance of proper pH levels are required when filling the pool as well as during the season. Consult your local swimming pool supply store for instructions.
- The season's first filling of the pool may have brackish water requiring extra water additives and extra filtering time. Do not allow swimming in pool until the pH level is balanced. Consult your local swimming pool supply store for instructions.
- Chlorinated water may damage lawns, gardens or shrubbery as children play in the pool and splash water outside the pool. Lawn areas underneath the pool liner will be destroyed. Note that some types of grass may grow through the liner.
- Filter run time depends on pool size, weather and usage level. Experiment with various run times so as to produce clean clear water.

⚠ CAUTION

Concentrated chlorine solutions may damage the pool liner. Always follow the chemical manufacturer's directions, and the health and hazard warnings.

LONG TERM STORAGE & WINTERIZATION

⚠ CAUTION

Allowing the water to freeze will damage the sand filter and void the warranty.

1. Before emptying your pool for long term storage, or relocation, be sure the water is directed towards an acceptable drain water receptacle away from the house. Check local regulations for specific directions regarding disposal of swimming pool water.
2. Switch off the unit, and disconnect power cord from electrical outlet.
3. When the pool is empty, disconnect all hoses from pump and plunger valves and remove the strainers/plunger valves from the pool wall.
4. In a counter clockwise motion unscrew the drain valve cap **(9)** from the drain valve to thoroughly drain the tank. The drain valve is located at the bottom of the filter tank.
5. Disassemble the pump motor from the tank base.
6. Leave sand filter pump pieces and hoses outside to thoroughly air dry.
7. Coat the following o-rings and washers with petroleum jelly for long term storage:
   - L-shape o-rings **(11)**.
   - Pump hose o-rings **(22)**.
   - Strainer valve assembly step washers **(23)**.
   - Flat strainer rubber washers **(25)**.
8. Depress the 6-way valve handle and rotate so as to set the pointer on the valve top "N" position. This allows the water to drain from the valve. Leave the 6-way valve in this inactive position.
9. It is best to place all dry pieces and pump motor in the original packaging for storage. To avoid condensation or corrosion problem, do not cover or wrap pump motor with plastic bags.
10. Store the pump motor and accessories in a dry place. The storage's temperature should be controlled, between 0 degrees Celsius (32 degrees Fahrenheit) and 40 degrees Celsius (104 degrees Fahrenheit).
11. Cover the tank with a tarpaulin or plastic sheet to protect it from the weather.

TROUBLESHOOTING GUIDE

TROUBLE	CAUSE	SOLUTION
FILTER MOTOR FAILS TO START	• The motor is not plugged in. • The GFCI/RCD circuit breaker is tripped. • Motor too hot and overload protection is shut off.	• Line cord must be plugged into a 3 wire outlet that is protected by a Class A Ground Fault Circuit Interrupter, or RCD. • Reset circuit breaker. If circuit breaker trips repeatedly, your electrical system may have a defect. Turn off circuit breaker and call an electrician to correct the problem. • Let the motor cool down and restart again.
FILTER DOESN'T CLEAN POOL	• Improper chlorine or pH levels. • No filtering media in tank. • Wrong 6-way valve setting position. • Excessively dirty pool. • The strainer screen is restricting the water flow.	• Adjust the chlorine and pH level. Consult your local swimming pool supply stores. • Load with filter sand, see "sand loading instructions". • Set valve to "FILTER" position. • Operate the filter for longer periods. • Clean the strainer screen at the inlet.
FILTER DOESN'T PUMP WATER OR FLOW IS VERY SLOW	• Trapped air in the system. • Clogged inlet or discharge. • An air leak on the intake line. • Excessively dirty pool. • Sand media clogged with dirt. • Nozzle and strainer connections are reversed. • Crusting or caking on the filtering sand surface. • Pool vacuuming device attached to the system. • Inlet threaded air connector connected to the wrong hole on the liner.	• Release the air, see operating instructions section. • Clear any obstructions in the intake hose by discharging it inside pool wall. • Tighten hose nuts, check hoses for damage, check pool water level. • Backwash filter. • Install the nozzle at the upper position of the pool inlet, and the strainer at the lower position of the pool outlet. • Remove about 1" of sand if necessary. • Remove any pool vacuuming device attached to the system line. • Make sure the inlet threaded air connector is connected to the pool inlet upper hole.
PUMP DOESN'T WORK	• Low water level. • Strainer screen clogged up. • An air leak on the intake hose. • Faulty motor or the impeller is jammed.	• Fill pool to correct water level. • Clean strainer screens at pool inlet. • Tighten hose nuts, check hose for damage. • Contact Intex service center.
6-WAY VALVE/COVER LEAKING	• Sand tank o-ring missing. • Sand tank o-ring dirty. • Flange clamp not tight. • 6-way valve damage.	• Remove 6-way valve cover and ensure the o-ring is in place. • Clean sand tank o-ring with garden hose water. • Tighten securely. • Contact Intex service center.
HOSE LEAKING	• Hose nut not securely tight. • Hose connection fitting o-ring/ L-shape o-ring missing.	• Tighten/reinstall hose nut. • Ensure o-ring/L-shape o-ring is in place and not damaged.
TIMER IS INACCURATE OR TIMER CAN'T BE SET	• Possible inner timer defective.	• Turn off the pump and restart 5 minutes later. • Re-set the timer. • Contact Intex service center.
PRESSURE GAUGE DOESN'T WORK	• Clogged inlet of the pressure gauge. • Pressure gauge damage.	• Clear any obstructions in the intake by unscrewing it from the 6-way valve. • Contact Intex service center.
SAND IS FLOWING BACK INTO THE POOL	• Sand is too small. • Sand bed is calcified.	• Use only No. 20 silica sand with particle size range 0.45 to 0.85 mm (0.018 to 0.033 inches) and a Uniformity Coefficient less than 1.75. • Change sand.
INLET THREADED AIR CONNECTOR / AIR JET VALVE LEAKING	• Plunger valve not well-fitted. • Air jet valve is not tight and facing up. • Air jet valve internal seal blocked. • Air jet valve internal seal dirty. • Air jet valve broken.	• Tighten or reinstall plunger valve. • Tighten air jet valve and make sure it's facing up. • Turn pump ON and run for few seconds, then turn OFF, repeat 3 times. • Remove air jet valve, flush dirt out with water and replace valve back. • Replace a new air jet valve.
SMALL LEAK FROM AIR JET VALVE WHEN PUMP IS ON	• Accessories attached to the water circulation line.	• Remove all the accessories (such as solar mat, auto pool cleaner, LED light) from the water circulation line and place the air jet valve cap **(34)** over the air jet valve **(15)**. Do not cover the air jet valve **(15)** with the valve cap **(34)** under normal situation or when the pump is operating.

COMMON POOL PROBLEMS

PROBLEM	DESCRIPTION	CAUSE	SOLUTION
ALGAE	• Greenish water. • Green or black spots on pool liner. • Pool liner is slippery and/or has a bad odor.	• Chlorine and pH levels need adjustment.	• Super chlorinate with shock treatment. Correct pH to your pool store's recommended level. • Vacuum pool bottom. • Maintain proper chlorine level.
COLORED WATER	• Water turns blue, brown, or black when first treated with chlorine.	• Copper, iron or maganese in water being oxidized by the added chlorine.	• Adjust pH level to the recommended level. • Run filter until water is clear.
FLOATING MATTER IN WATER	• Water is cloudy or milky.	• "Hard water" caused by a too high pH level. • Chlorine content is low. • Foreign matter in water.	• Correct the pH level. Check with your pool dealer for advice. • Adjust the chlorine level.
CHRONIC LOW WATER LEVEL	• Level is lower than on previous day.	• Rip or hole in pool liner or hoses. • The drain valves are loose.	• Repair with a patch kit. • Finger tighten all caps.
SEDIMENT ON POOL BOTTOM	• Dirt or sand on pool floor.	• Heavy use, getting in and out of pool.	• Use Intex pool vacuum to clean bottom of pool.
SURFACE DEBRIS	• Leaves, insects etc.	• Pool too close to trees.	• Use Intex pool skimmer.

IMPORTANT

If you continue to experience difficulty, please contact our Consumer Service Department for assistance. See separate "Authorized Service Centers" sheet.

This device complies with part 15 of the FCC Rules. Operation is subject to the following two conditions: (1) This device may not cause harmful interference, and (2) this device must accept any interference received, including interference that may cause undesired operation.

WARNING: Changes or modifications not expressly approved by the party responsible for compliance could void the user's authority to operate the equipment.

NOTE: This equipment has been tested and found to comply with the limits for a Class B digital device, pursuant to part 15 of the FCC Rules. These limits are designed to provide reasonable protection against harmful interference in a residential installation. This equipment generates, uses and can radiate radio frequency energy and, if not installed and used in accordance with the instructions, may cause harmful interference to radio communications. However, there is no guarantee that interference will not occur in a particular installation. If this equipment does cause harmful interference to radio or television reception, which can be determined by turning the equipment off and on, the user is encouraged to try to correct the interference by one or more of the following measures:

- Reorient or relocate the receiving antenna.
- Increase the separation between the equipment and the receiver.
- Connect the equipment into an outlet on a circuit different from that to which the receiver is connected.
- Consult the dealer or an experienced radio/TV technician for help.

GENERAL AQUATIC SAFETY

Water recreation is both fun and therapeutic. However, it involves inherent risks of injury and death. To reduce your risk of injury, read and follow all product, package and package insert warnings and instructions. Remember, however, that product warnings, instructions and safety guidelines cover some common risks of water recreation, but do not cover all risks and dangers.

For additional safeguards, also familiarize yourself with the following general guidelines as well as guidelines provided by nationally recognized Safety Organizations:

- Demand constant supervision. A competent adult should be appointed as a "lifeguard" or water watcher, especially when children are in and around the pool.
- Learn to swim.
- Take the time to learn CPR and first aid.
- Instruct anyone who is supervising pool users about potential pool hazards and about the use of protective devices such as locked doors, barriers, etc.
- Instruct all pool users, including children what to do in case of an emergency.
- Always use common sense and good judgement when enjoying any water activity.
- Supervise, supervise, supervise.

For additional information on safety, please visit

- **The Association of Pool and Spa Professionals: The Sensible Way to Enjoy Your Aboveground/Onground Swimming Pool www.nspi.org**
- **American Academy of Pediatrics: Pool Safety for Children www.aap.org**
- **Red Cross www.redcross.org**
- **Safe Kids www.safekids.org**
- **Home Safety Council: Safety Guide www.homesafetycouncil.org**
- **Toy Industry Association: Toy Safety www.toy-tia.org**

LIMITED WARRANTY

Your Sand Filter Pump has been manufactured using the highest quality materials and workmanship. All Intex products have been inspected and found free of defects prior to leaving the factory. This Limited Warranty applies only to the Sand Filter Pump and accessories listed below.

The provisions of this Limited Warranty apply only to the original purchaser and is not transferable. This Limited Warranty is valid for the period noted below from the latter of the date of the initial retail purchase or delivery. Keep your original sales receipt with this manual, as proof of purchase will be required and must accompany warranty claims or the Limited Warranty is invalid.

Sand Filter Pump Warranty – 2 Years
Hoses, Plunger Valves & Fittings Warranty – 180 days

If a manufacturing defect is found within the periods noted above, please contact the appropriate Intex Service Center listed in the separate "Authorized Service Centers" sheet. The Service Center will determine the validity of the claim. If the Service Center directs you to return the product, please carefully package the product and send with shipping and insurance prepaid to the Service Center. Upon receipt of the returned product, the Intex Service Center will inspect the item and determine the validity of the claim. If the provisions of this warranty cover the item, the item will be repaired or replaced at no charge.

Any and all disputes regarding the provisions of this Limited Warranty shall be brought before an informal dispute settlement board and unless and until the provisions of these paragraphs are carried forth, no civil action may be instituted. The methods and procedures of this settlement board shall be subject to the rules and regulations set forth by the Federal Trade Commission (F.T.C.). IMPLIED WARRANTIES ARE LIMITED TO THE TERMS OF THIS WARRANTY AND IN NO EVENT SHALL INTEX, THEIR AUTHORIZED AGENTS OR EMPLOYEES BE LIABLE TO THE BUYER OR ANY OTHER PARTY FOR DIRECT OR CONSEQUENTIAL DAMAGES OR LIABILITIES. Some states, or jurisdictions do not allow the exclusion or limitation of incidental or consequential damages, so the above limitation or exclusion may not apply to you.

This Limited Warranty does not apply if the products are subject to negligence, abnormal use or operation, accident, improper operation, improper voltage or current contrary to operating instructions, or to damage by circumstances beyond Intex's control, including but not limited to, ordinary wear and tear and damage caused by exposure to fire, flood, freezing, rain, or other external environmental forces. This Limited Warranty applies only to those parts and components sold by Intex. The Limited Warranty does not cover unauthorized alterations, repairs or disassembly by anyone other than Intex Service Center personnel.

DO NOT GO BACK TO THE PLACE OF PURCHASE FOR RETURN OR REPLACEMENT. IF YOU ARE MISSING PARTS OR NEED ASSISTANCE, PLEASE CALL US (FOR U.S. AND CANADIAN RESIDENTS): 1-310-549-8235 OR VISIT OUR WEBSITE: WWW.INTEXCORP.COM.

Proof of Purchase must accompany all returns or the warranty claim will be invalid.