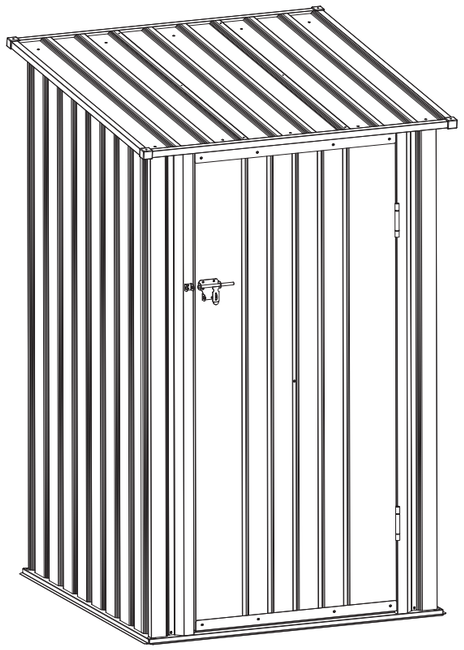

BE
YOUR
LIFE BUILDER

www.patiowell.com

Patiowell

ASSEMBLY INSTRUCTIONS

METAL GARDEN SHED

SKU: T-PS22-0110-BK

Patiowell
Metal Garden House
Installation Tutorial
https://patiowell.com/pages/video-t-ps22-0110-bk

saleservice@patiowell.com

SITE PREPARATION

Level the ground surface.



Recommendation: Construct a wooden or concrete base as a foundation.

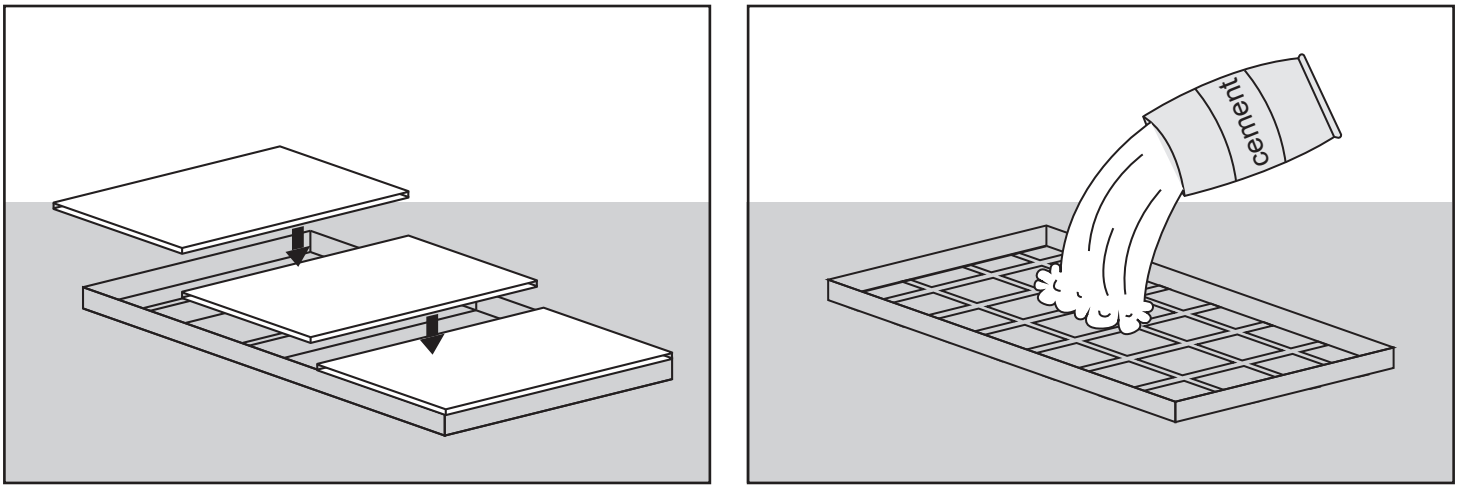

The external dimensions of the product :

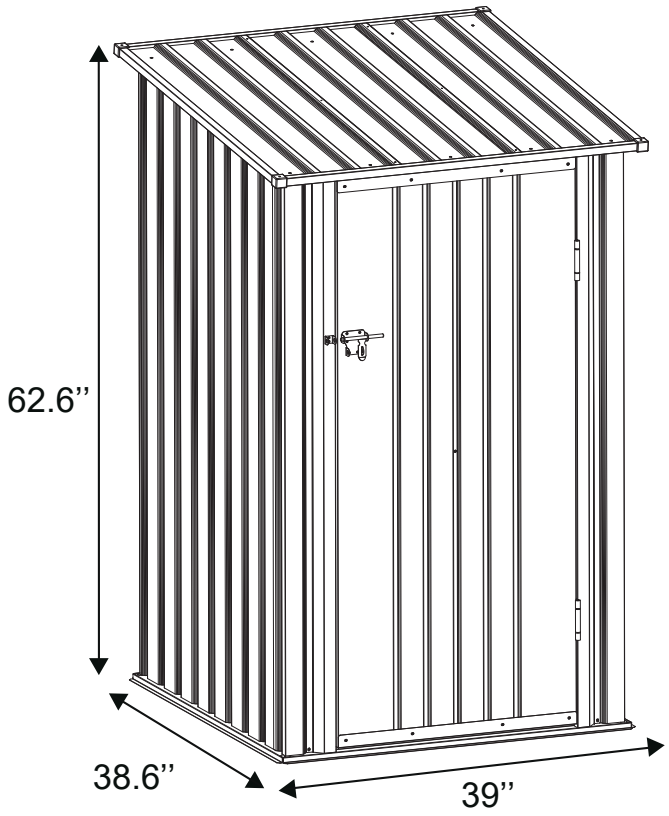

BEFORE STARTING ASSEMBLY

Remove all of the pieces from the package and spread them out on the ground.
Before installation, please check the type and quantity of parts first.
It is recommended to use a clean work surface to spread the parts out and for pre-assembly steps. Review all instructions before you begin, continue to refer to instructions during assembly.
Be sure to follow all steps thoroughly.
Please prepare these components in advance at the beginning of each stage.

REQUIRED TOOLS

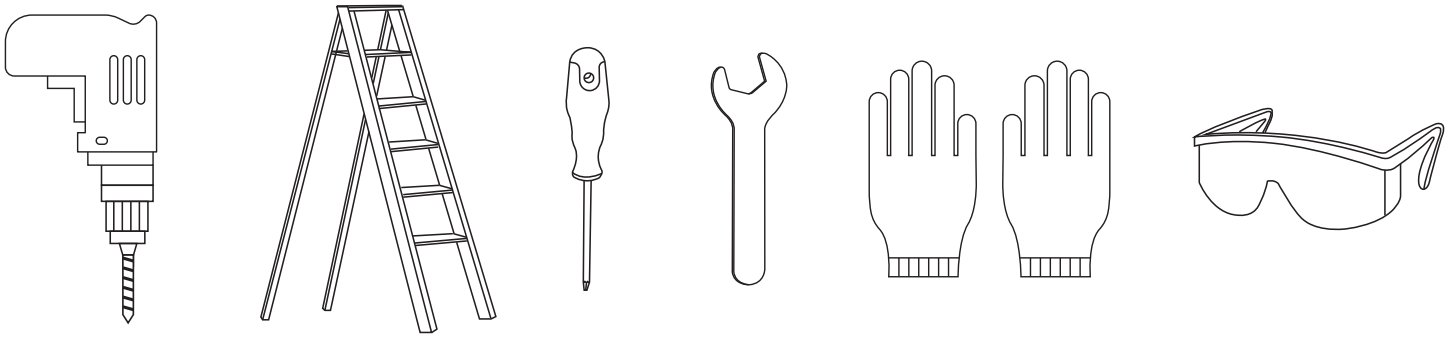

CAUTION

Some parts have steel edges. Please be careful when handling components. Always wear work gloves, eye protection and long sleeves when assembling or performing any maintenance on your shed. Do not attempt assembly on days with strong winds or low temperatures.



Requires two people and takes 2-3 hours for Installation.
Recommended to wear gloves to avoid scratches.
Please read the manual carefully before installation.

DO NOT RETURN YOUR UNIT
TO THE STORE
Contact us first
saleservice@patiowell.com

FOUNDATION

1 X1 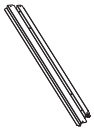	2 X1 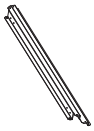
3 X1 	4 X1 

PLATES

P2 X2 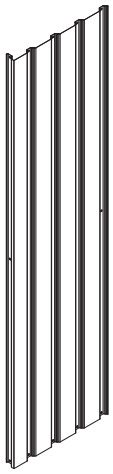	P1AL X1 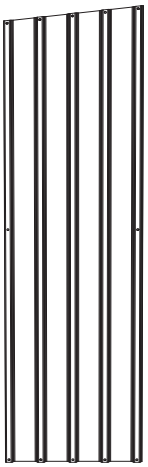	P1AR X1 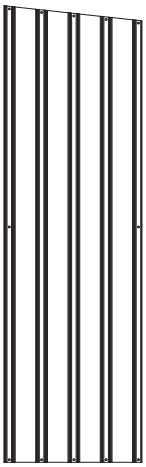	P4AL X1 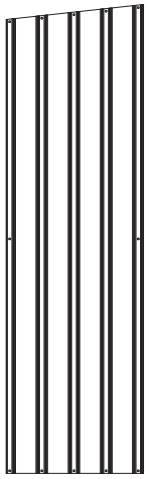
P4AR X1 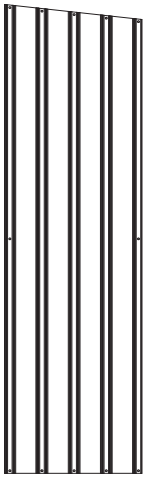	DLA X1 	DRA X1 	P4 X1 

PLATES



P4L X1



P4R X1

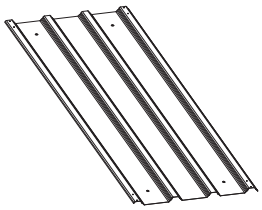

P7 X2

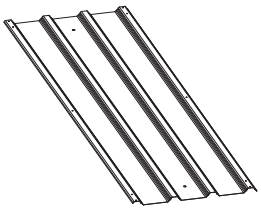

P8 X1

STRIPS



UL1 X1



UR1 X1

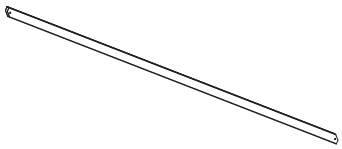

DX1 X2



20 X2

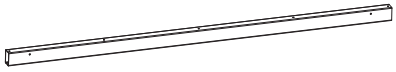

8 X1

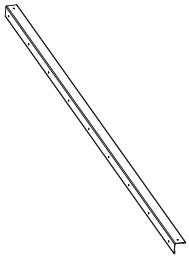

9L X1

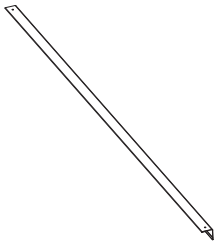

9R X1



10 X1

STRIPS

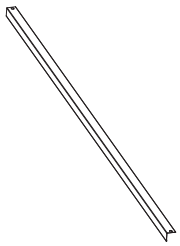 15 X2	 16 X2

STANDARD

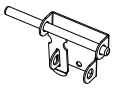 DG X1	 DF X1	 DH X2	 GC X4
 S1 X90	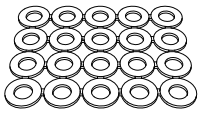 V2 X90		

SCREW

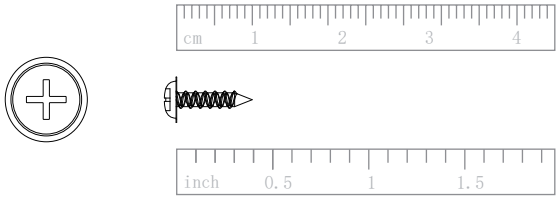 F1(X106) M4*10	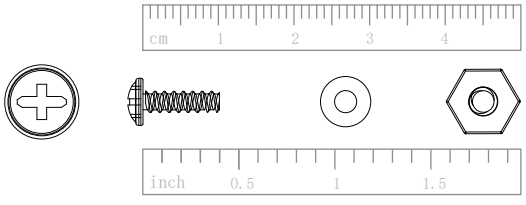 F2(X14) M4*10
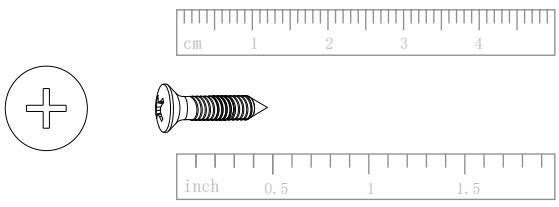 F3(X16) M5*12	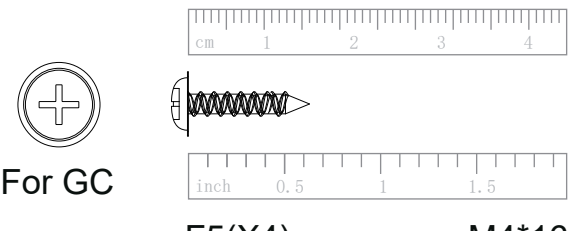 For GC F5(X4) M4*16

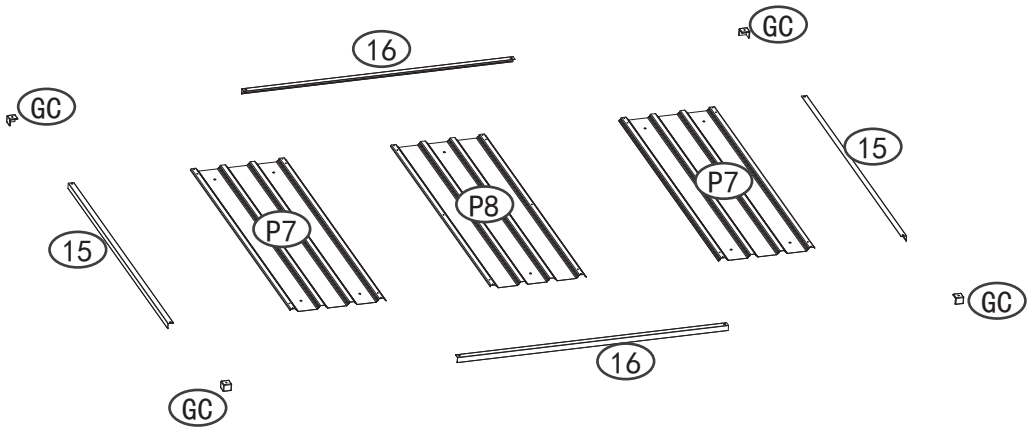
16
GC
GC
15
P7
P8
P7
15
GC
16
GC

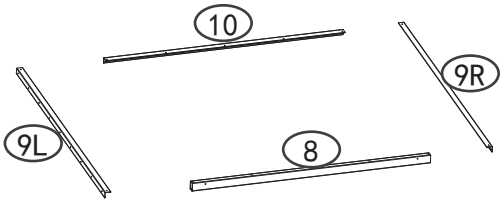
10
9R
9L
8

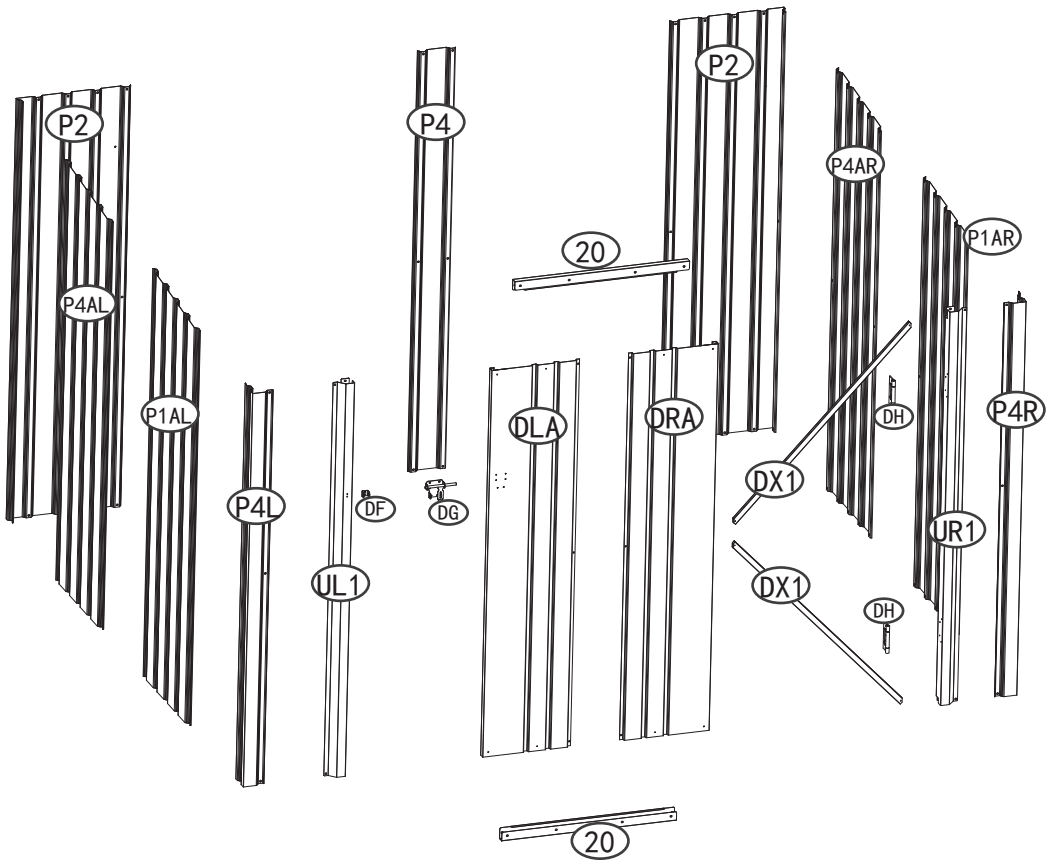
P2
P4
P2
P4AR
P1AR
20
P4AL
P1AL
P4L
DF
DG
UL1
DLA
ORA
DH
P4R
DX1
UR1
DX1
DH
20

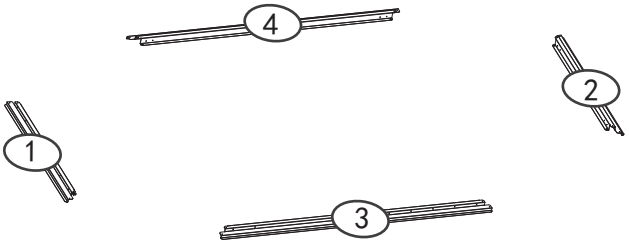
4
2
1
3

CONTENTS

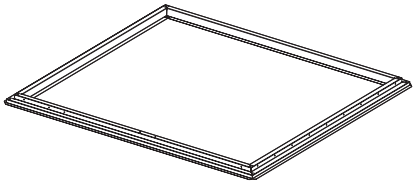

Bottom frame 09 (page)

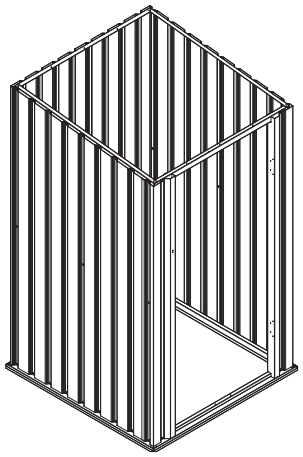

Wall 10-16 (page)

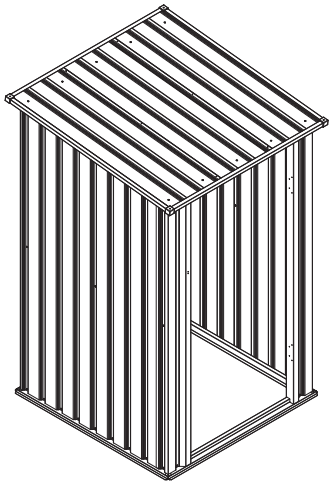

Roof 17-18 (page)

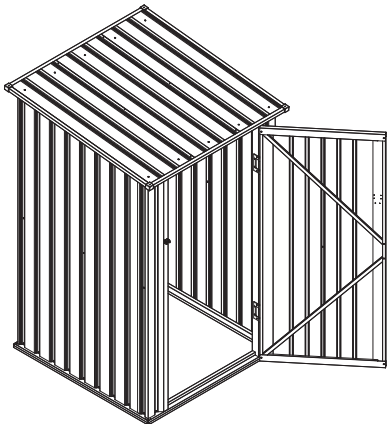

Door 18-20 (page)

STEP 1

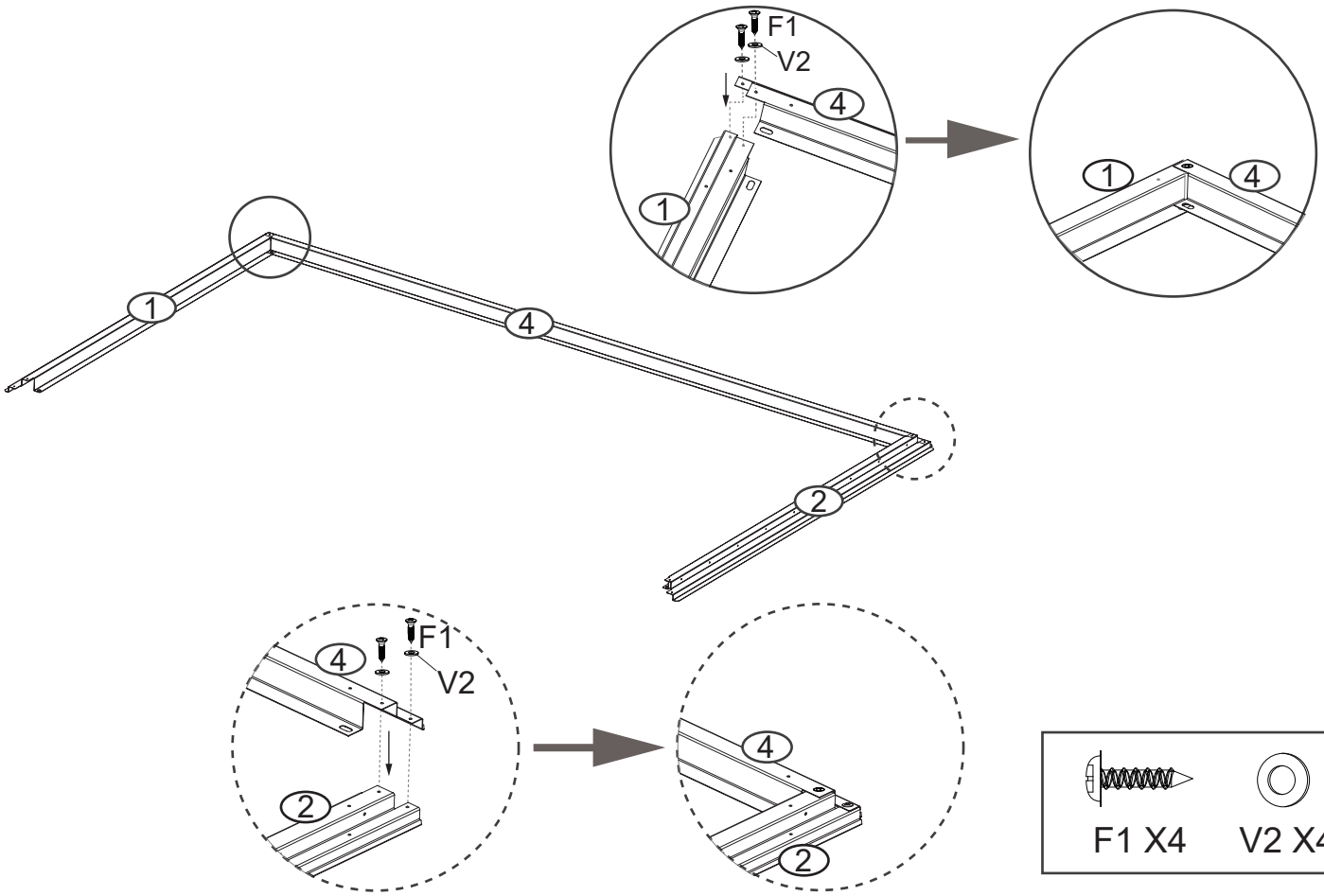

STEP 2

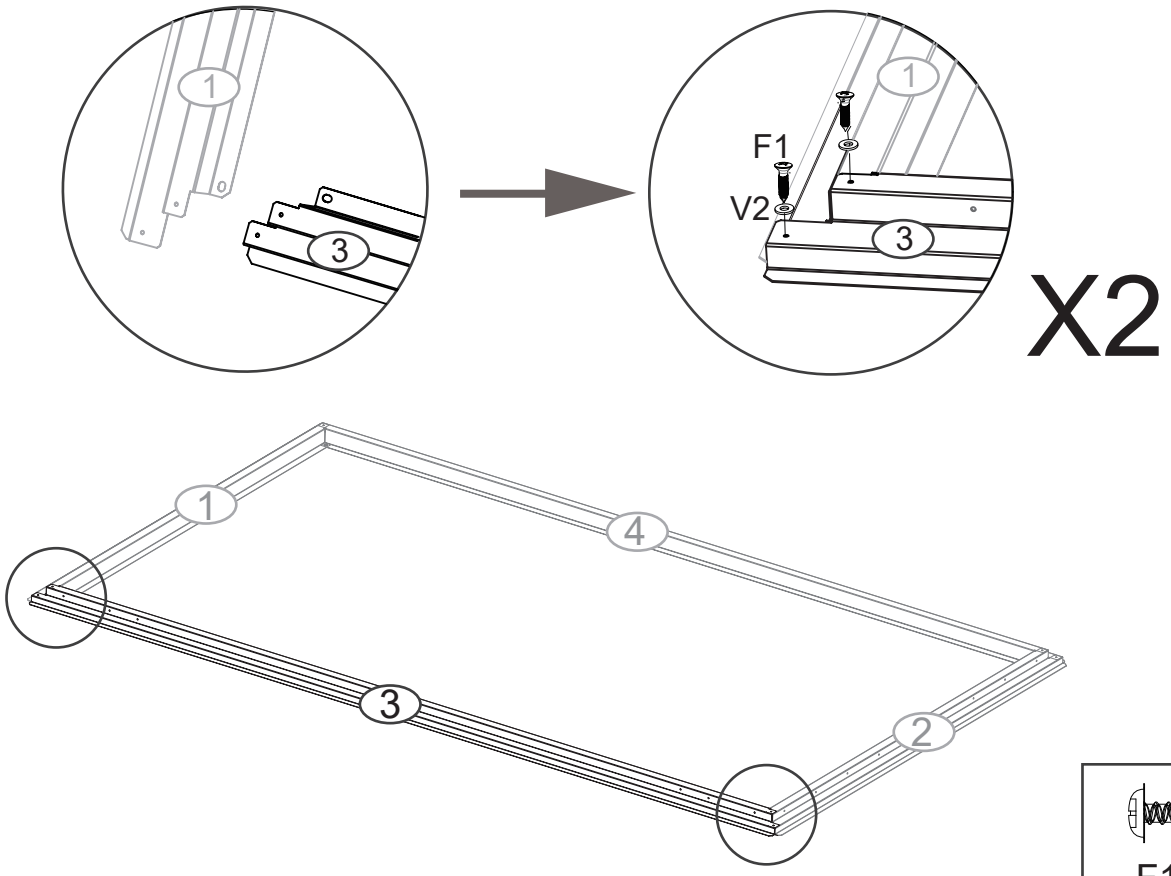

STEP 3

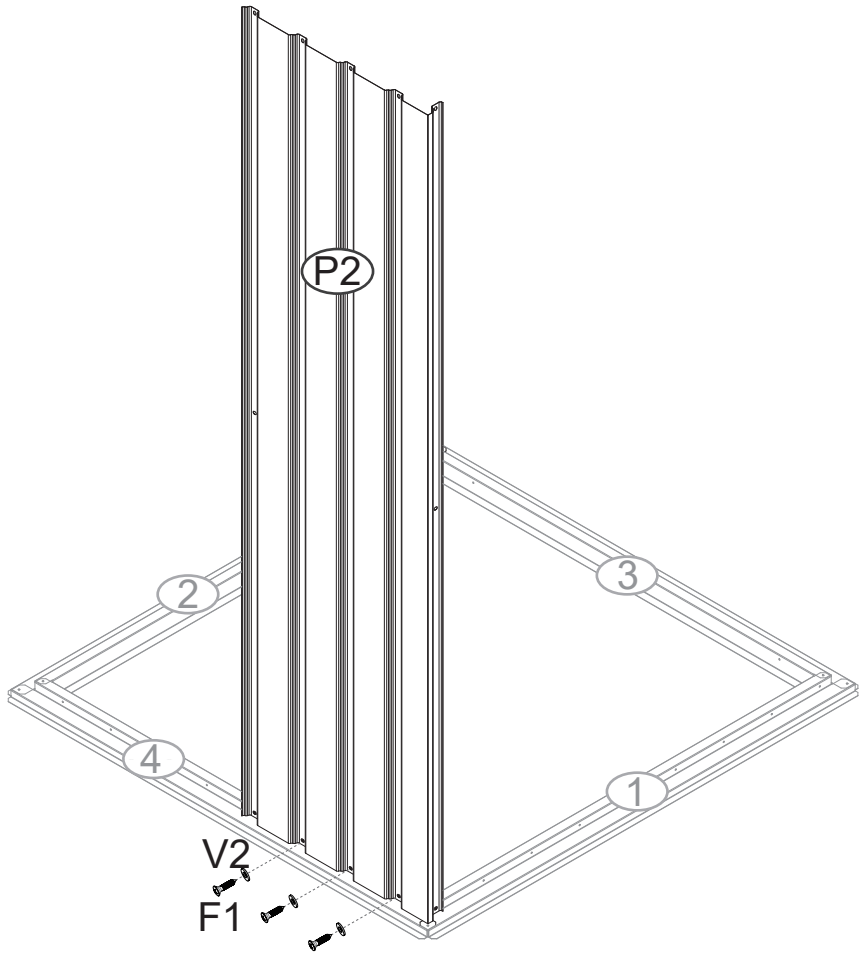

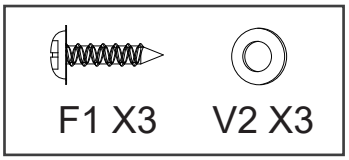

STEP 4

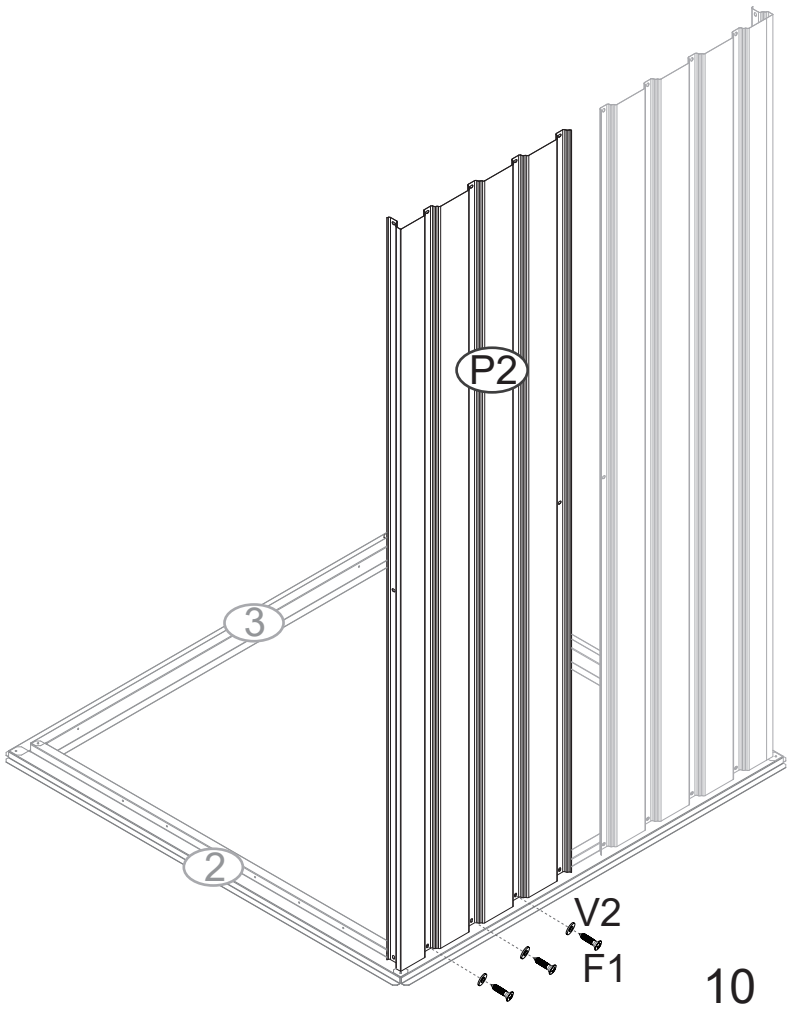

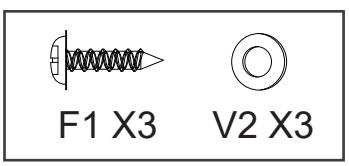

STEP 5

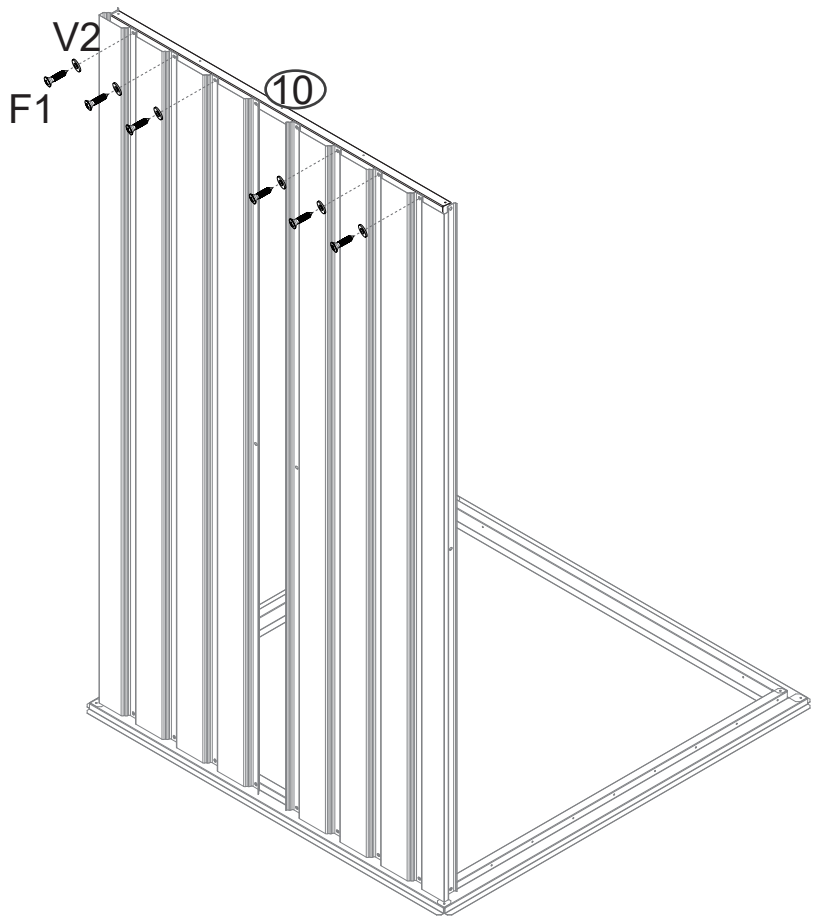

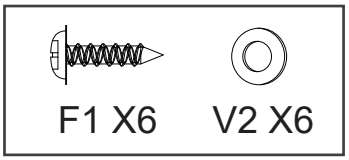

STEP 6

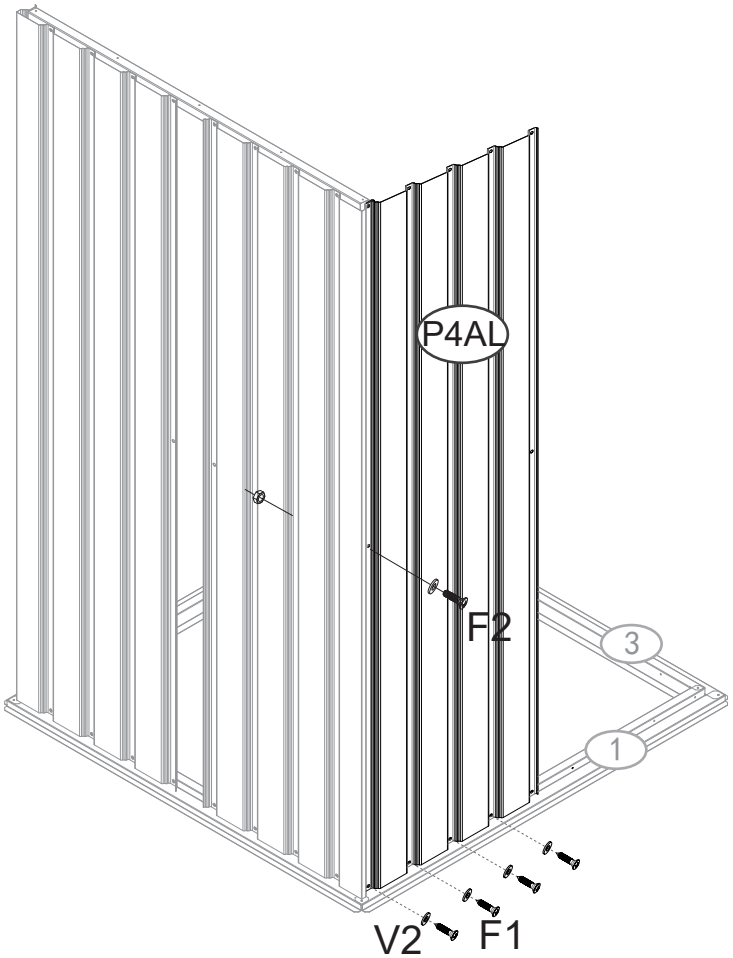

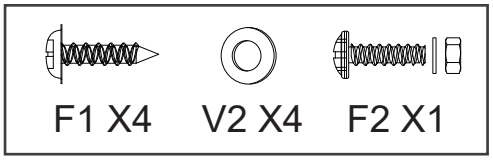

STEP 7

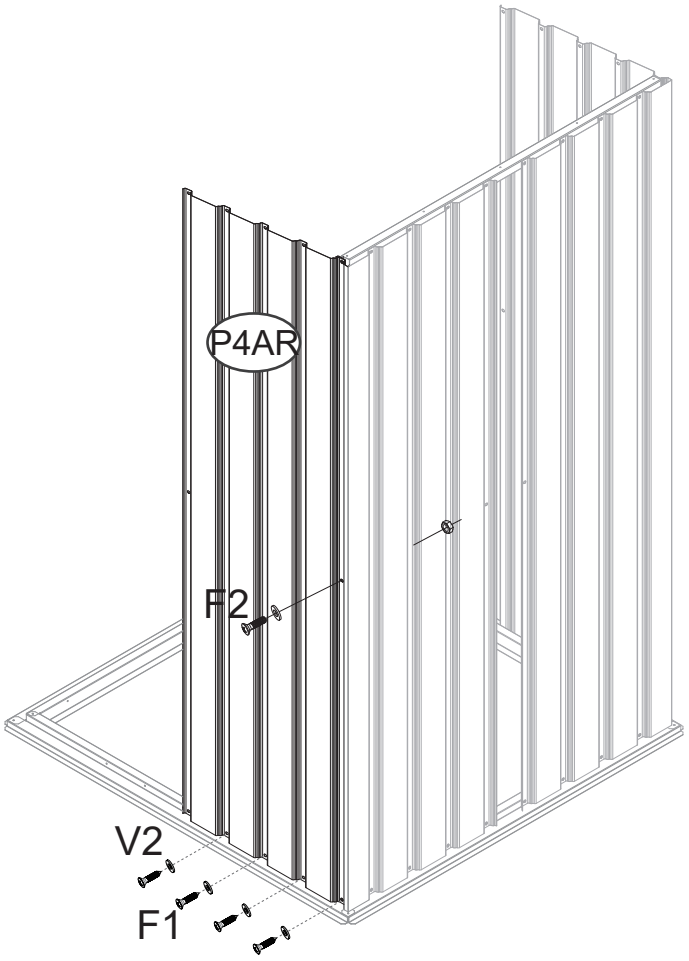

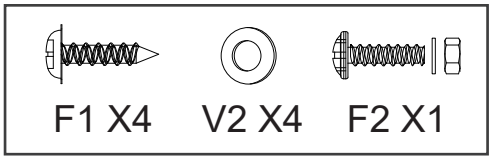

STEP 8

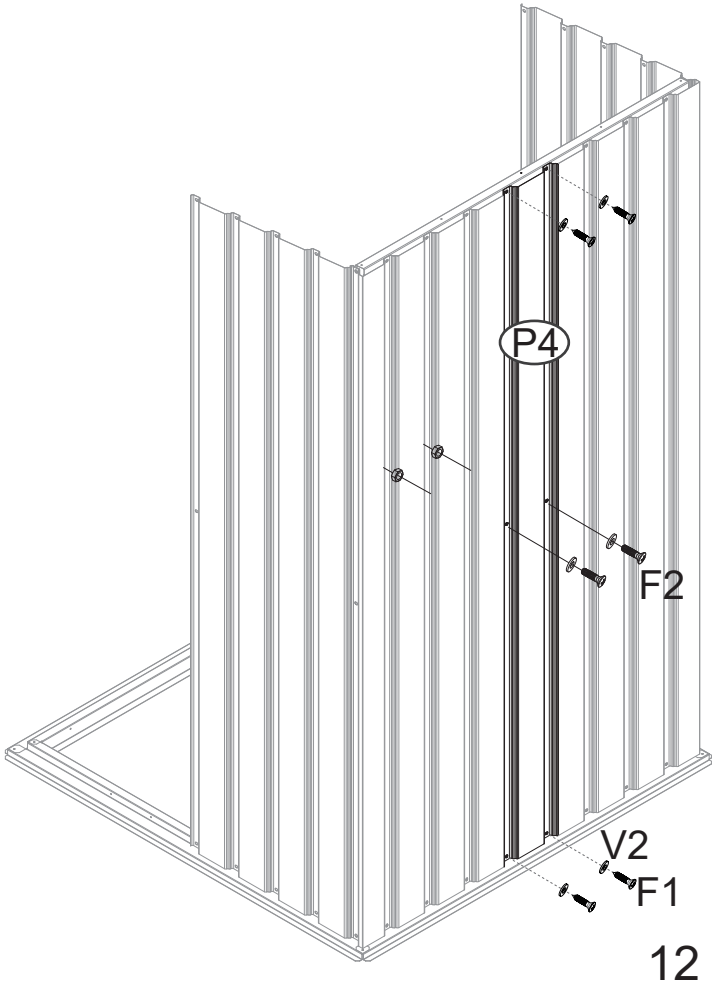

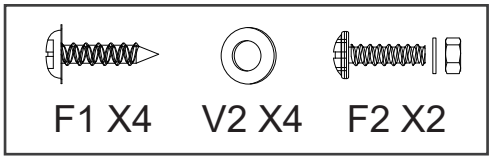

STEP 9

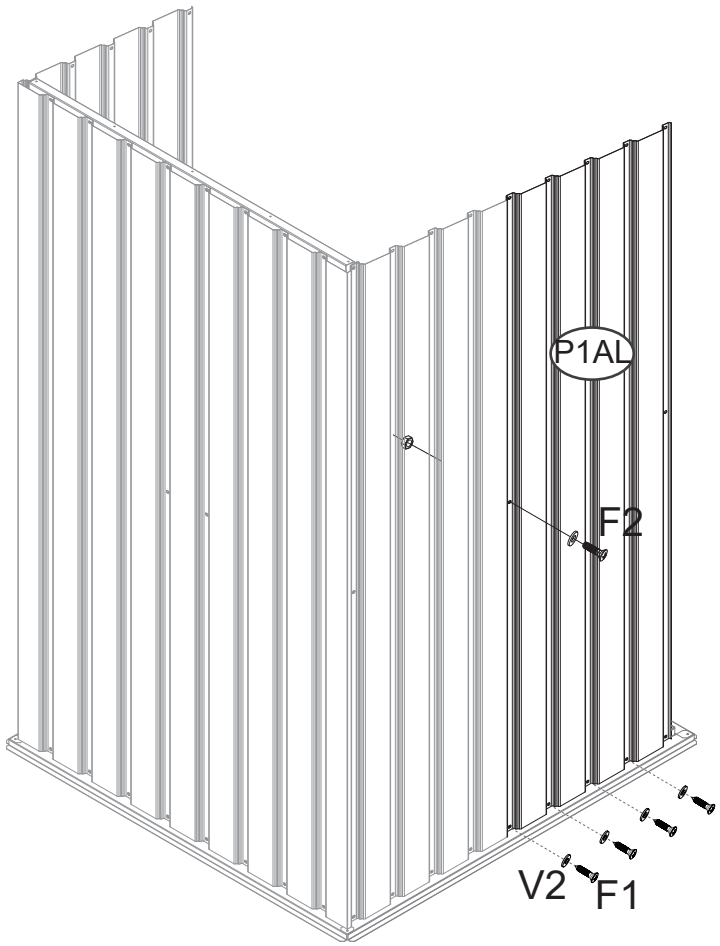

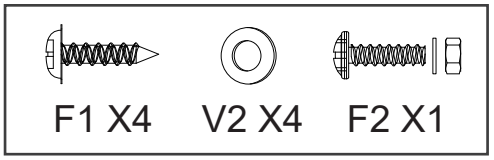

STEP 10

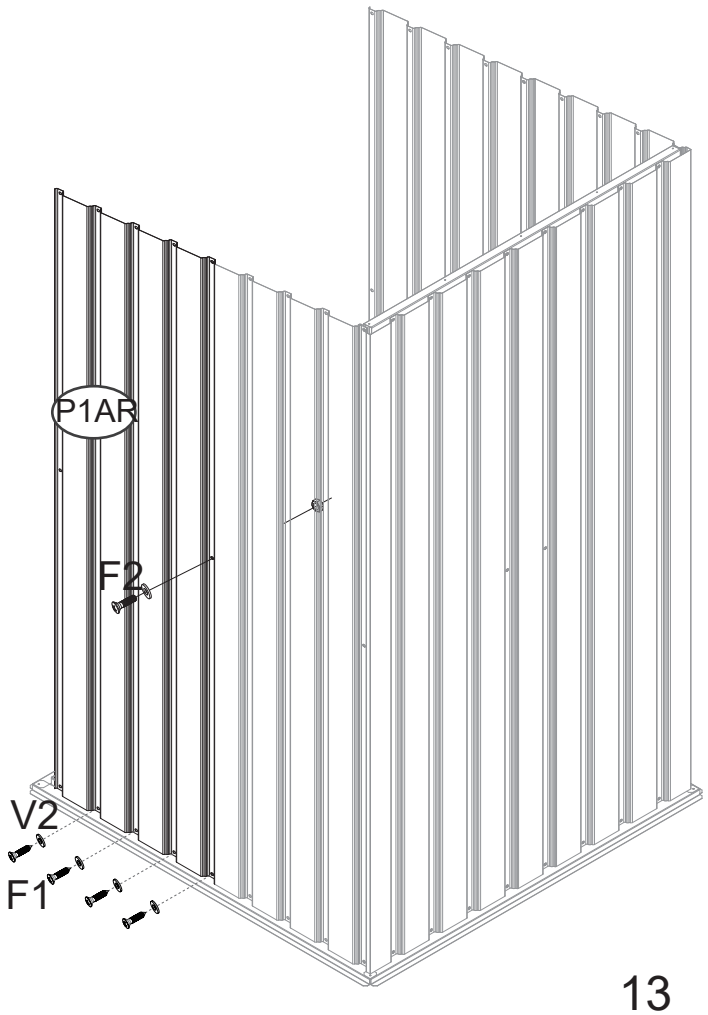

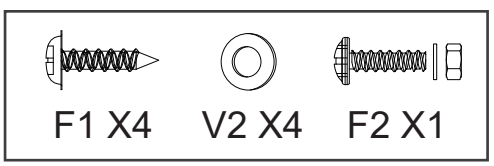

STEP 11

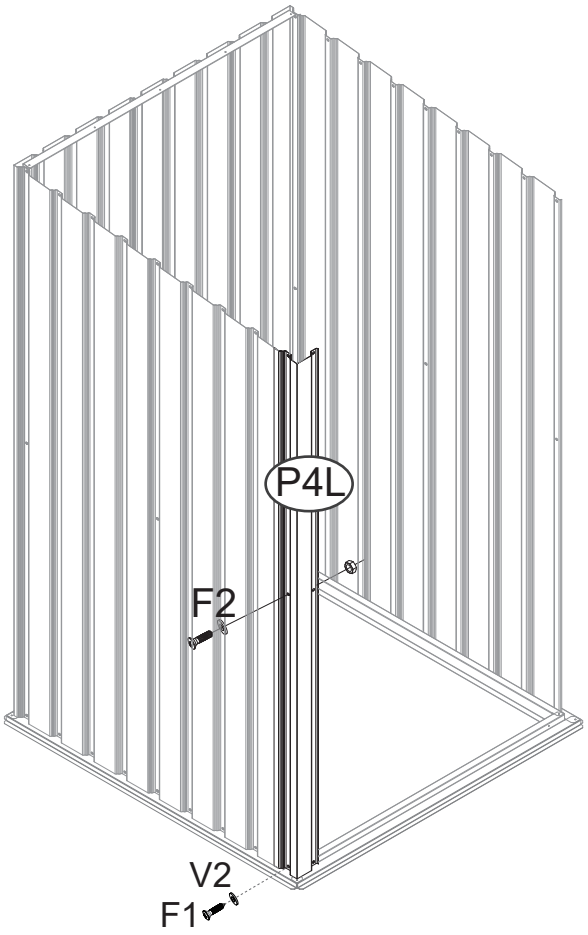

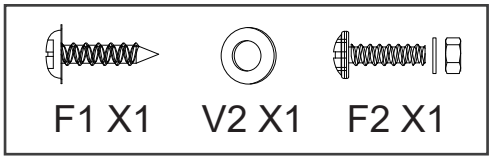

STEP 12

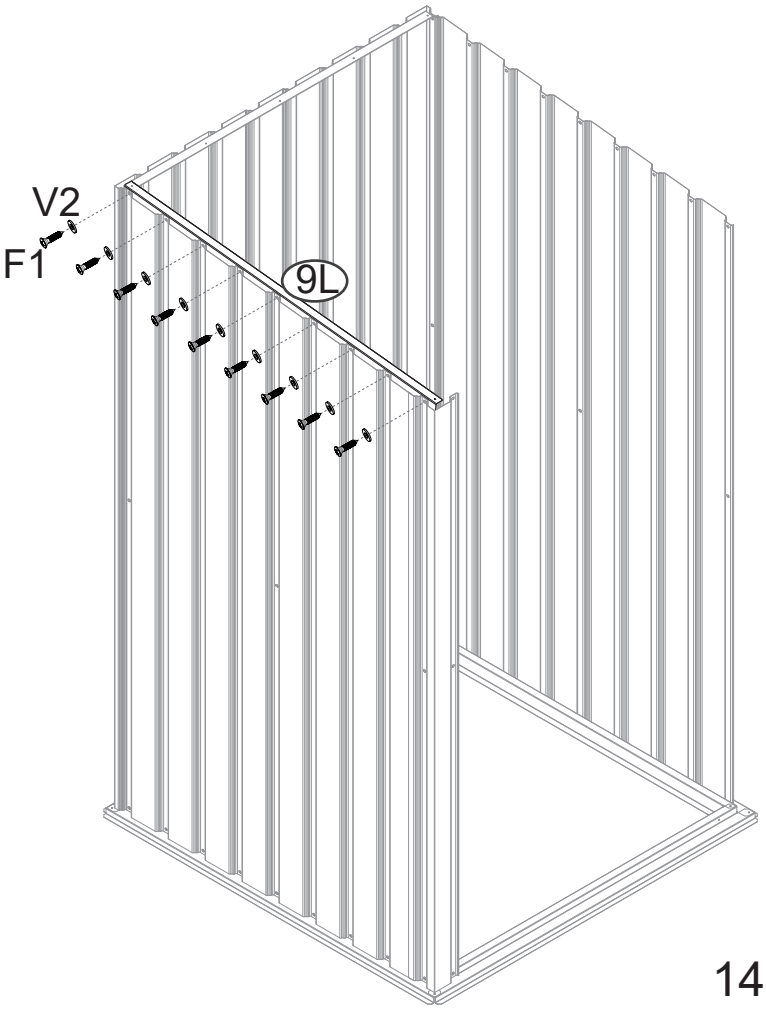

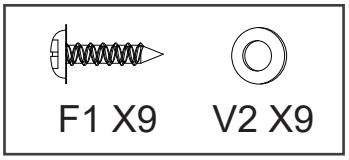

STEP 13

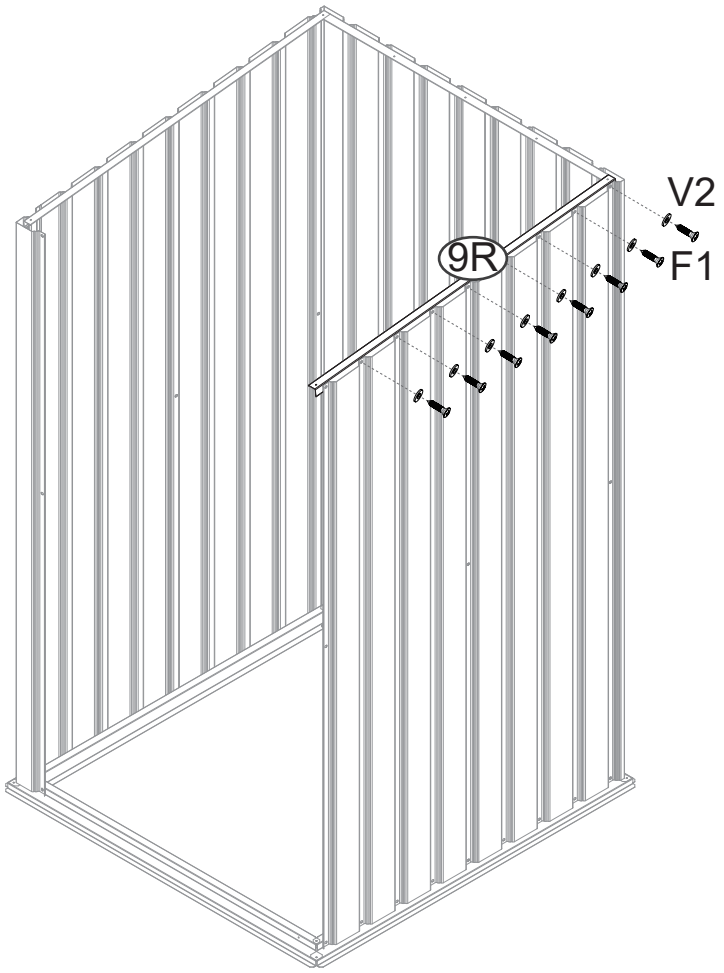

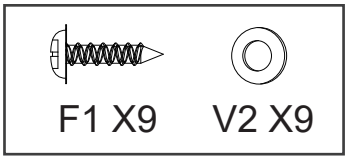

STEP 14

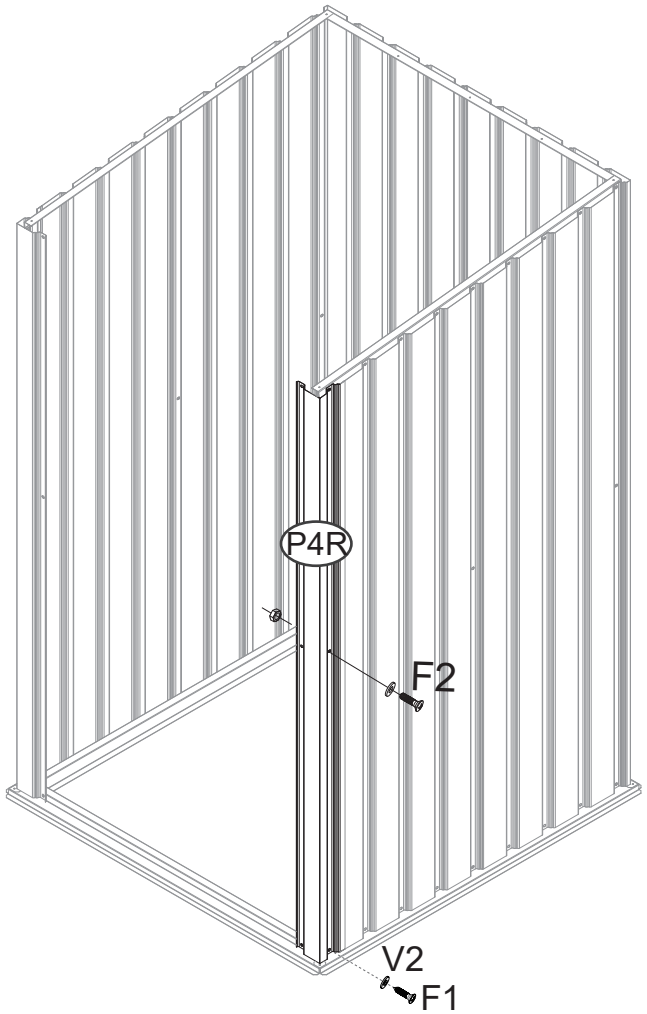

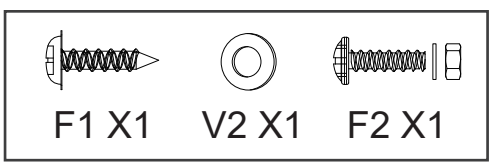

STEP 15

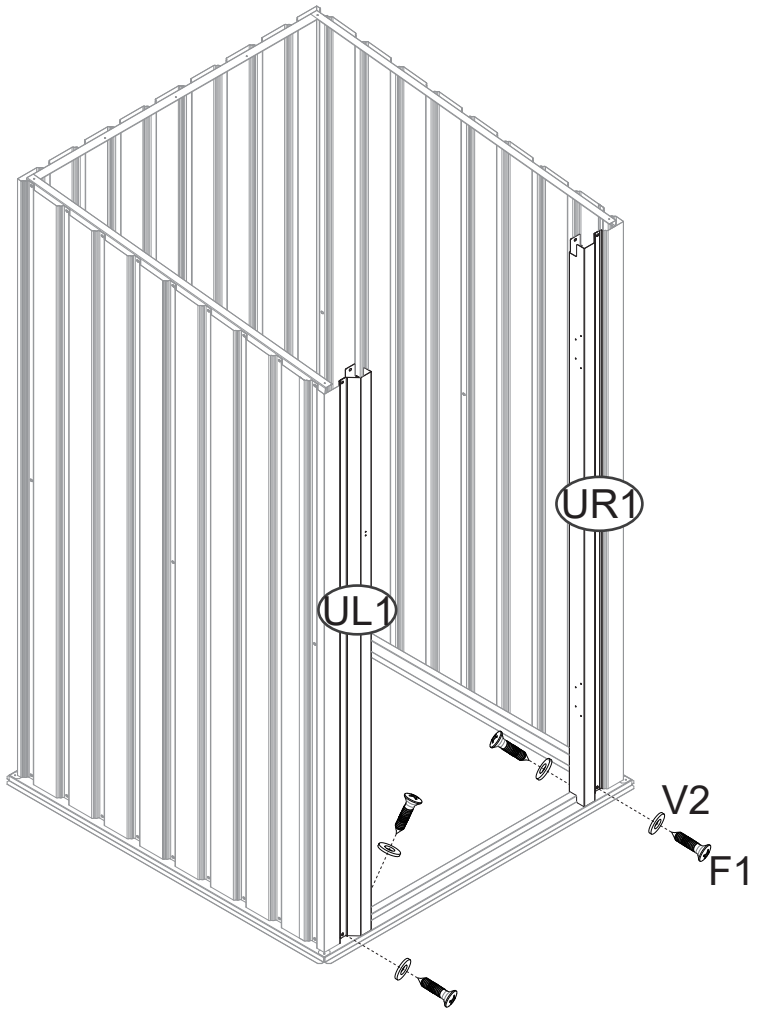

UL1and UR 1There are holes on the inside and outside.
All need to be fixed with screws.

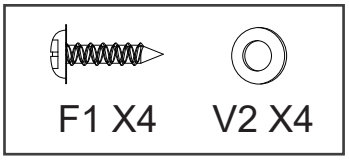

STEP 16

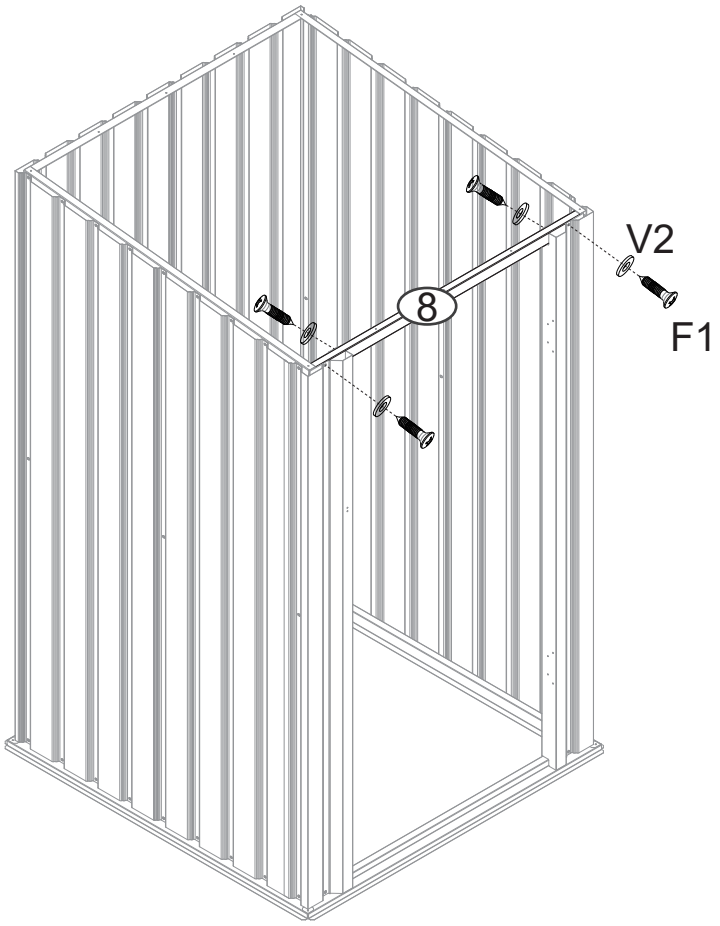

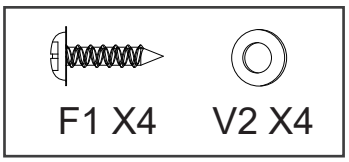

STEP 17

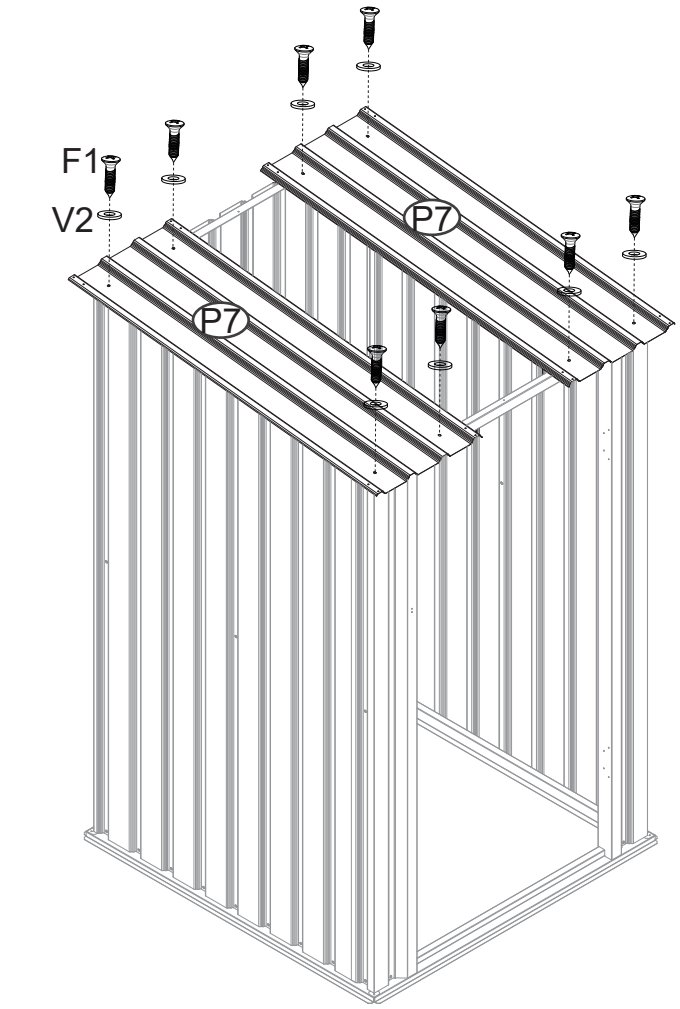

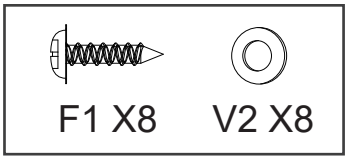

STEP 18



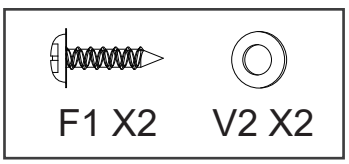

STEP 19

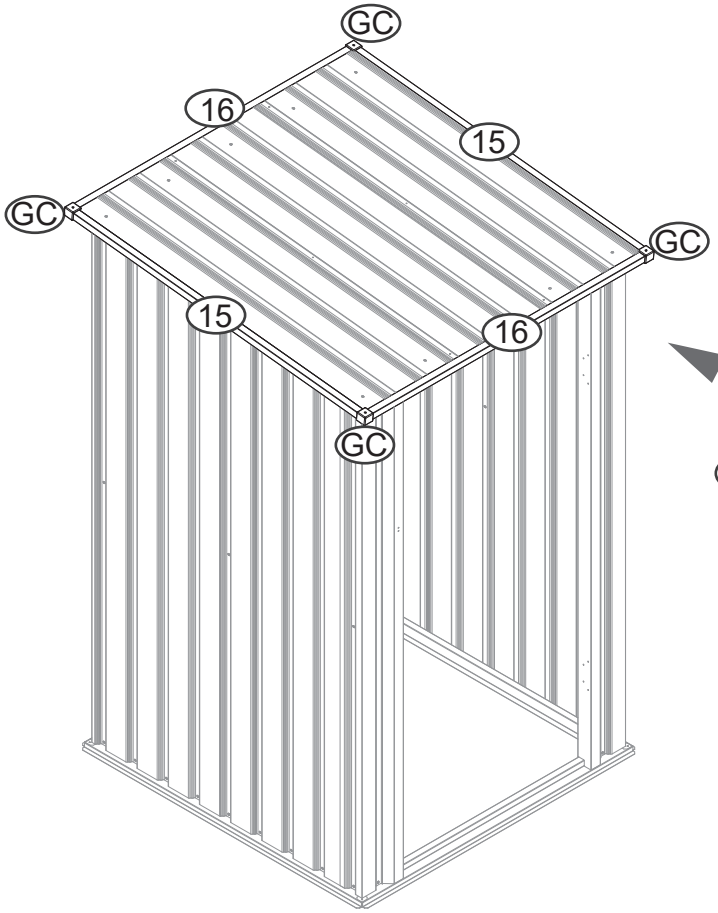

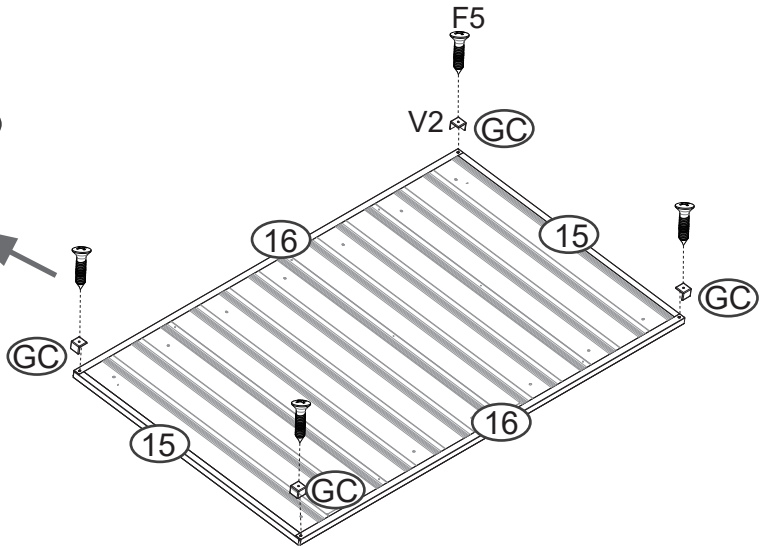

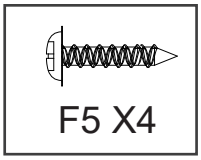

STEP 20

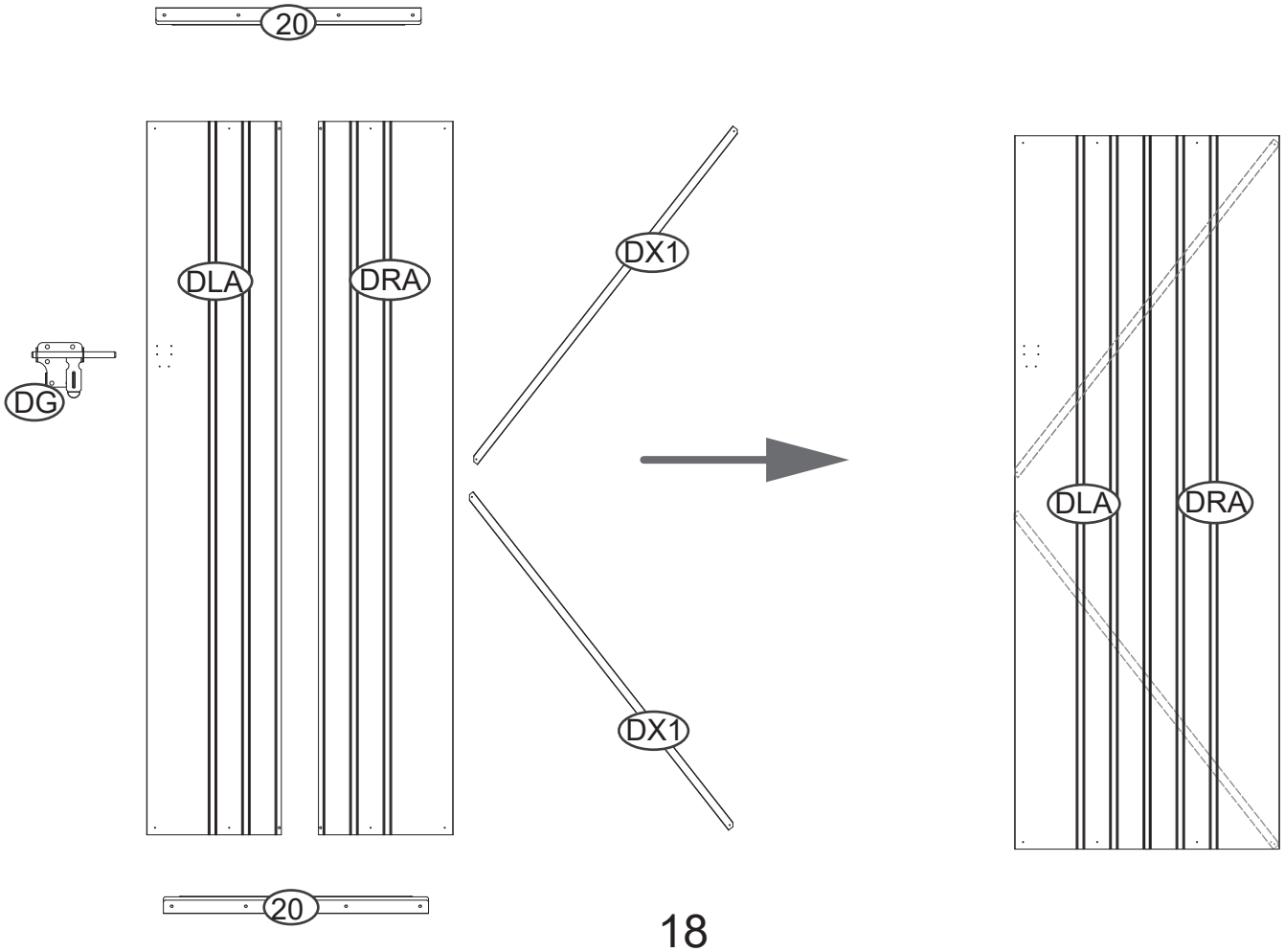

STEP 21

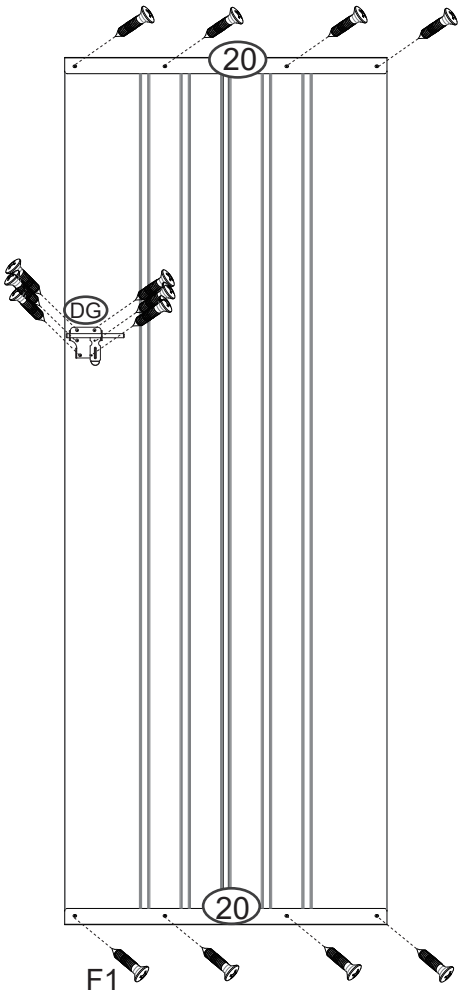

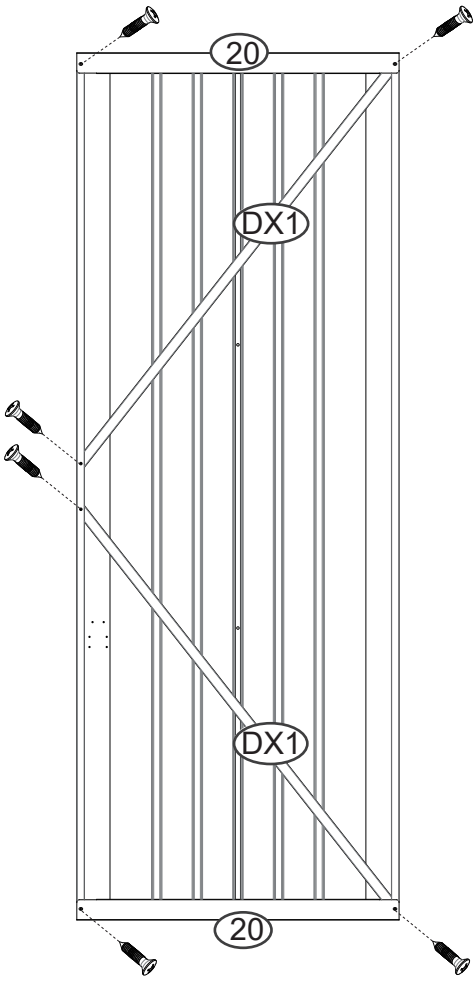

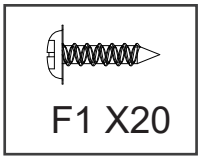

STEP 22

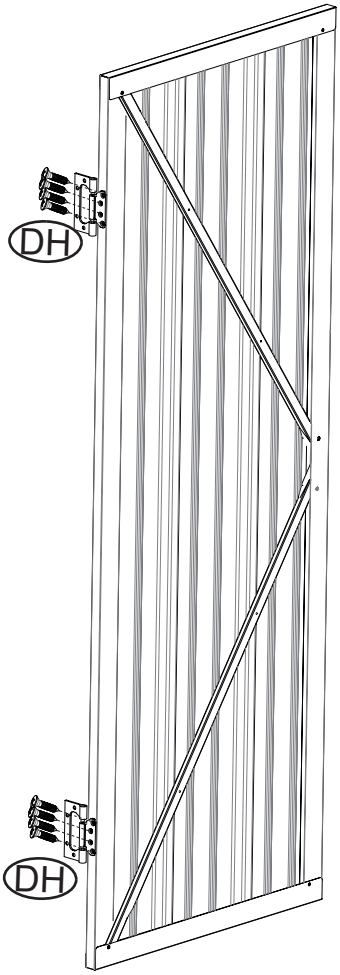

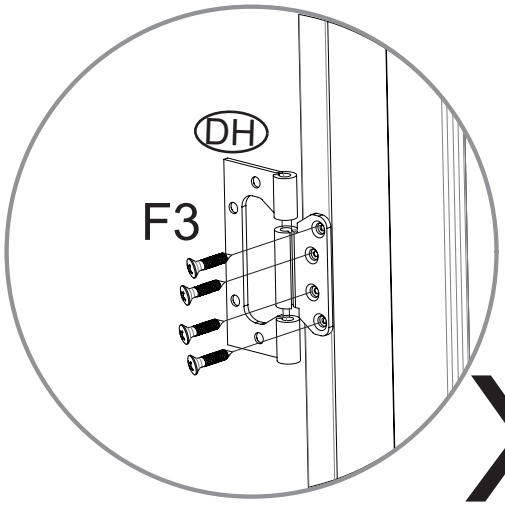

X2

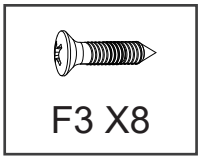

STEP 23

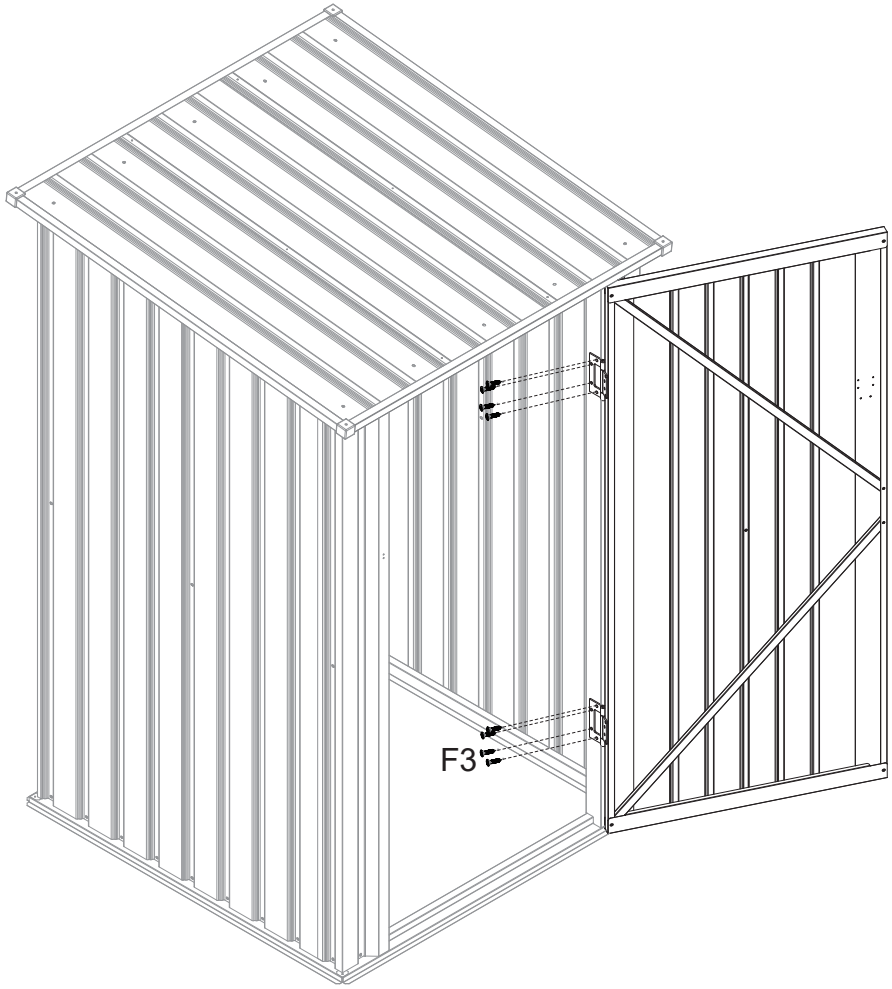

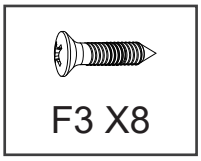

STEP 24

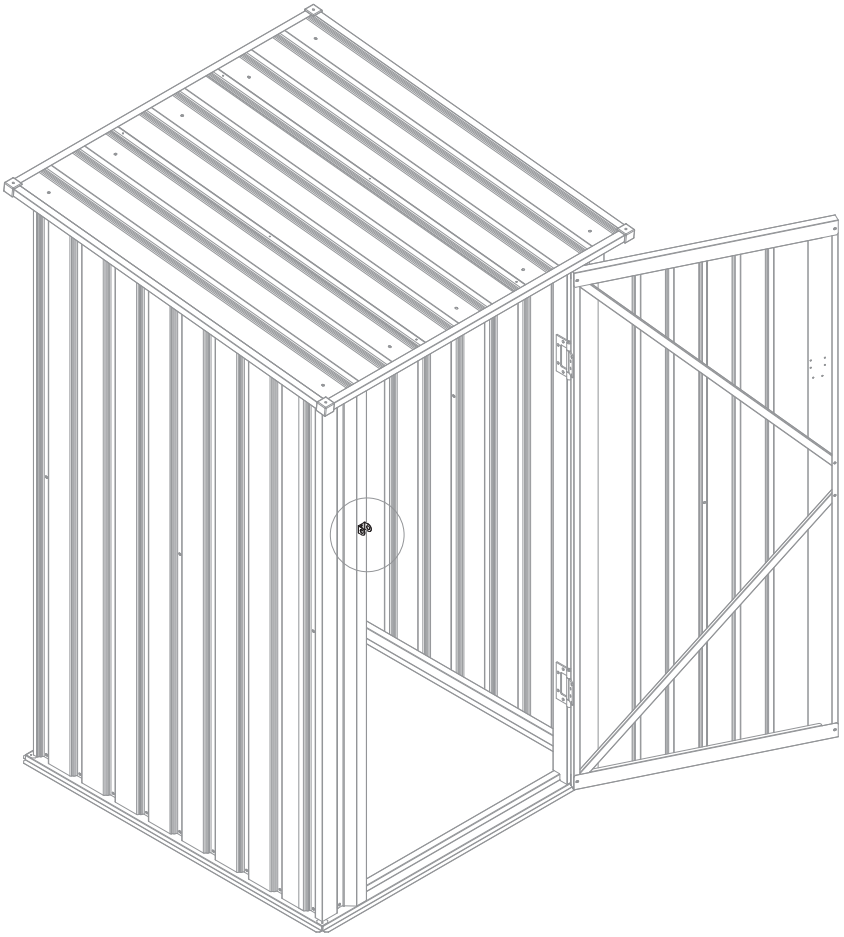

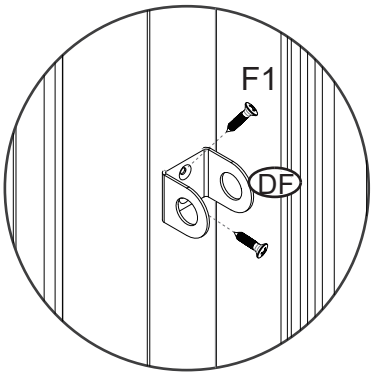

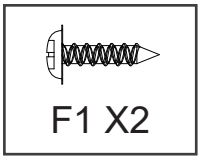

STEP 25

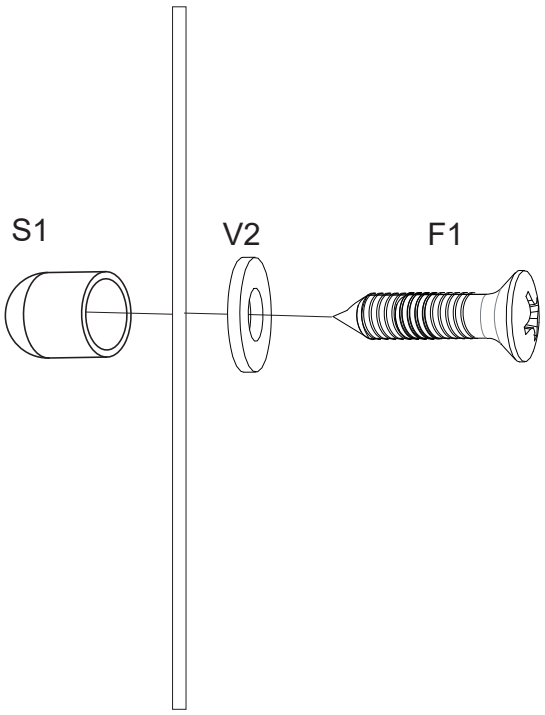



S1 X90

FINISH



CARE & SAFETY

- In case of fire, do not attempt to extinguish any burning polypropylene with water Unsuitable for storage of flammable or corrosive substances
- It is of utmost importance to assemble all of the parts according to the directions. Do not skip any step.
- Please consult your local authorities if any permits are required to erect shed.
- Periodically check shed to assure that it remains stable and that the site remains level.
- It is highly recommended to secure the shed to an immovable object or to the ground by drilling holes in the floor at the pre-marked locations and inserting proper screws into the ground (size: 1.9’’-3’’ ,screws are not included).
- Wear safety-goggles and always follow the manufacturer’s instructions when using power tools.
- Wash shed with garden hose or a mild detergent solution. Using a stiff brush or abrasive cleaner could damage shed.
- Hot items such as recently used grills, blowtorches, etc. must not be stored in the shed.
- Heavy articles should not be leaned against the walls, as this may cause distortion.
- Keep roof clean of snow and leaves. Heavy amounts of snow on roof can damage the shed making it unsafe to enter.
- Although wind direction varies, it is an important factor when taking into account where to place your shed. Therefore, it is recommended to reduce wind exposure of the shed in general, and the door side in particular.
- Keep doors closed and locked to prevent wind damage.
- Do not stand on the roof.