CABINET ID	DESCRIPTION
W0505 - 30	Vanity w/White VTop

REV	ECO#	DESCRIPTION	REV'D BY DATE	CHK'D BY DATE	APRV'D BY DATE
0		Initial Released	AGS 4/1/2022	AGS 4/1/2022	AGS 4/1/2022

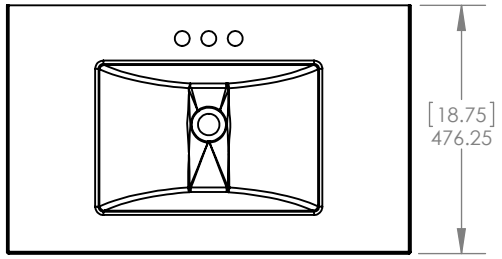

Top View / Vista Superior

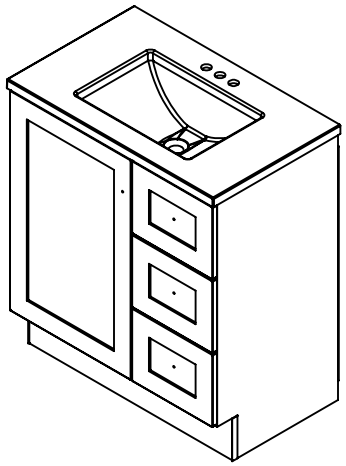

Isometric View / Vista Isometrica

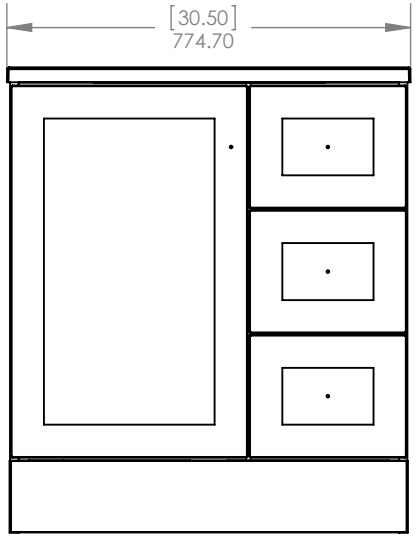

Front view / Vista Frontal

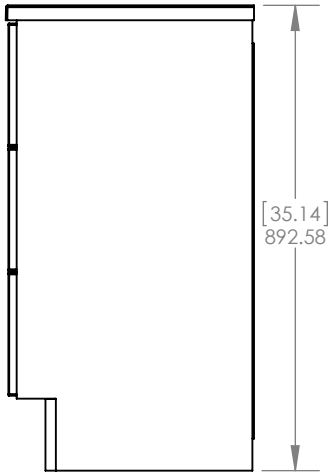

Side View / Vista Lateral

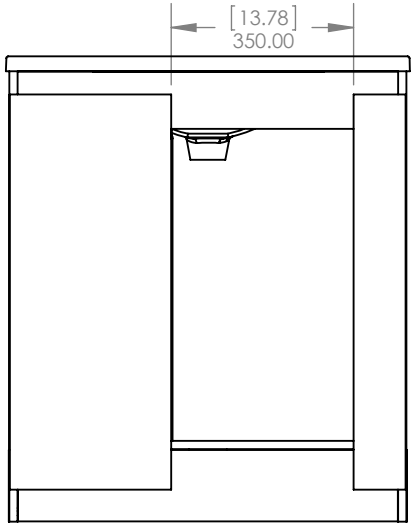

Back View / Vista Trasera

PROPRIETARY AND CONFIDENTIAL
THE INFORMATION CONTAINED IN THIS DRAWING IS THE SOLE PROPERTY OF WOODCRAFTERS HOME PRODUCTS L.L.C. ANY REPRODUCTION IN PART OR AS A WHOLE WITHOUT THE WRITTEN PERMISSION OF WOODCRAFTERS HOME PRODUCTS L.L.C. IS PROHIBITED.

Tolerancia no epsecificada	
Lineal ±1.00mm	Angular ±0.5°

Drawn BY/ Dibujado por:	Adolfo Gallegos	4/1/2022
Checked By / Revisado Por:	Adolfo Gallegos	4/1/2022
Approved By / Revisado Por:	Adolfo Gallegos	4/1/2022

Cabinet Name/Nombre de Gabinete: **W0505 - 30in**

FG ID:

# of Drawing/ de Dibujo:

PAGE 1 OF 1

REV: **0**

CABINET ID	DESCRIPTION
W0505 - 30	Vanity w/White VTop

REV	ECO#	DESCRIPTION	REV'D BY DATE	CHK'D BY DATE	APRV'D BY DATE
0		Initial Released	AGS 4/1/2022	AGS 4/1/2022	AGS 4/1/2022

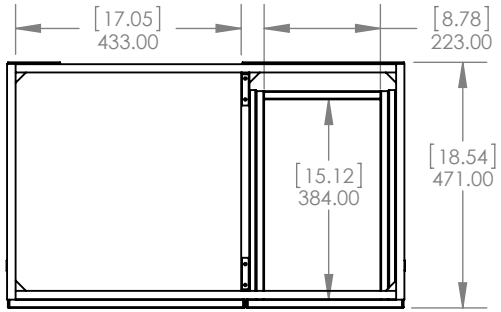

Top View / Vista Superior

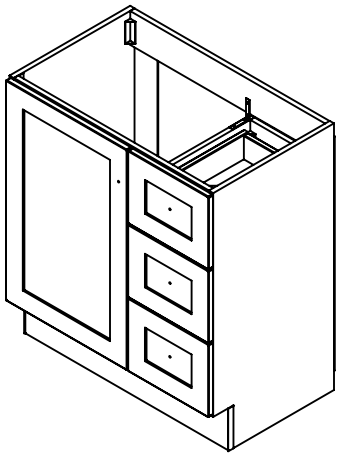

Isometric View / Vista Isometrica

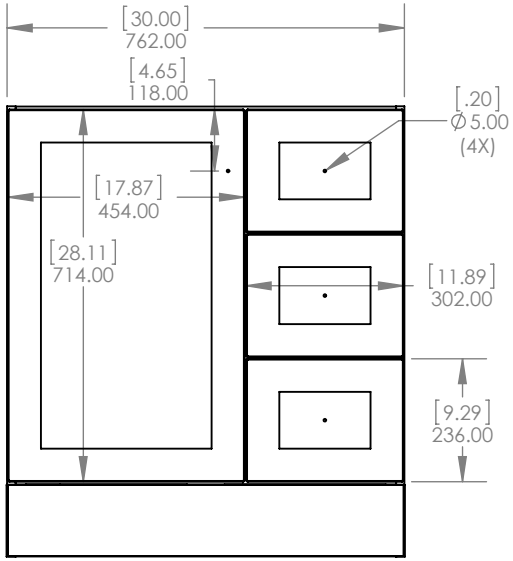

Front view / Vista Frontal

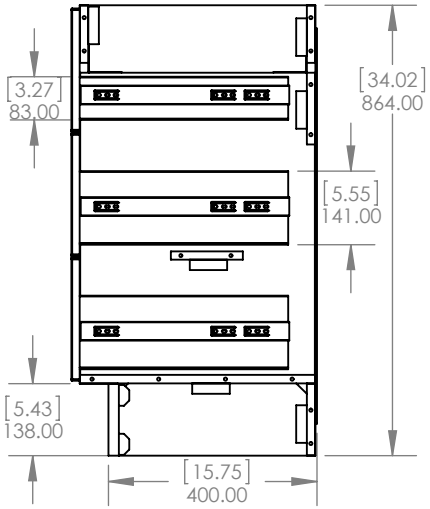

Side View / Vista Lateral

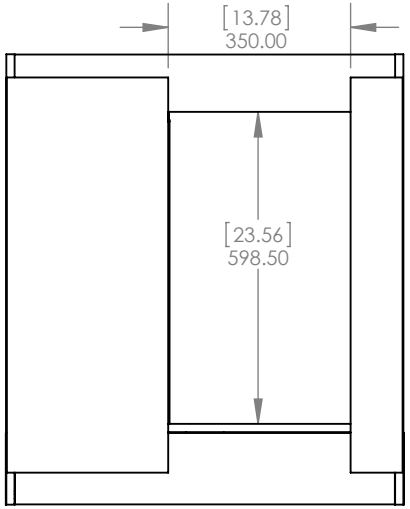

Back View / Vista Trasera

PROPRIETARY AND CONFIDENTIAL
THE INFORMATION CONTAINED IN THIS DRAWING IS THE SOLE PROPERTY OF WOODCRAFTERS HOME PRODUCTS L.L.C. ANY REPRODUCTION IN PART OR AS A WHOLE WITHOUT THE WRITTEN PERMISSION OF WOODCRAFTERS HOME PRODUCTS L.L.C. IS PROHIBITED.

Tolerancia no epsecificada	
Lineal ±1.00mm	Angular ±0.5°

Drawn BY/ Dibujado por:	Adolfo Gallegos	4/1/2022
Checked By / Revisado Por:	Adolfo Gallegos	4/1/2022
Approved By / Revisado Por:	Adolfo Gallegos	4/1/2022

Cabinet Name/Nombre de Gabinete: **W0505 - 30in**

FG ID:

# of Drawing/ de Dibujo:

PAGE 1 OF 1

REV: **0**

ITEM TYPE	ITEM ID	ITEM DESCRIPTION	DRAWING STATUS
Top	59xxx	Vtop Rect 2 tone 30.5x18.75 CP White 4 in NO BS	R& D

REV	DESCRIPTION	DATE	APPROVAL
0	RELEASED	3/31/22	E. SANDOVAL

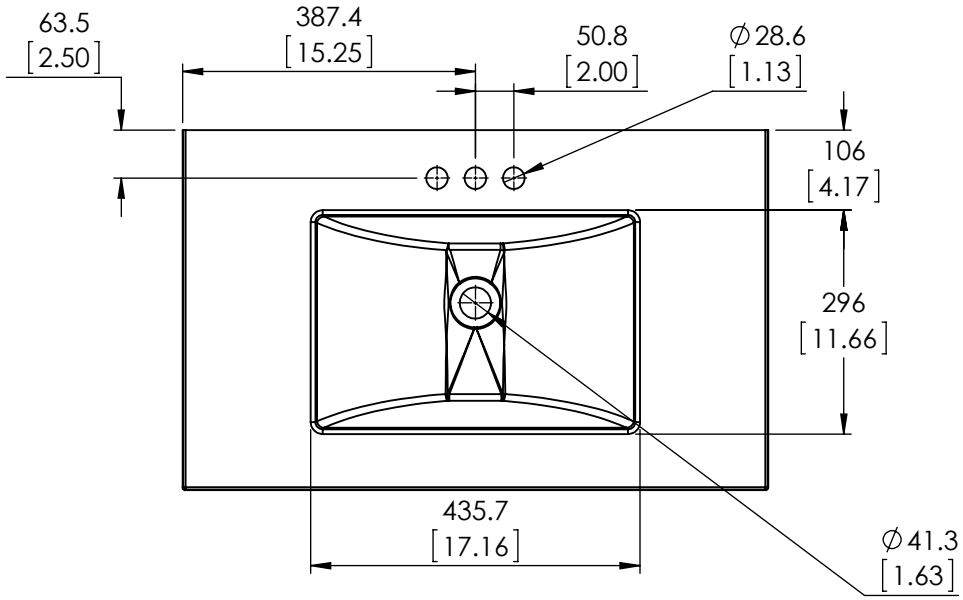

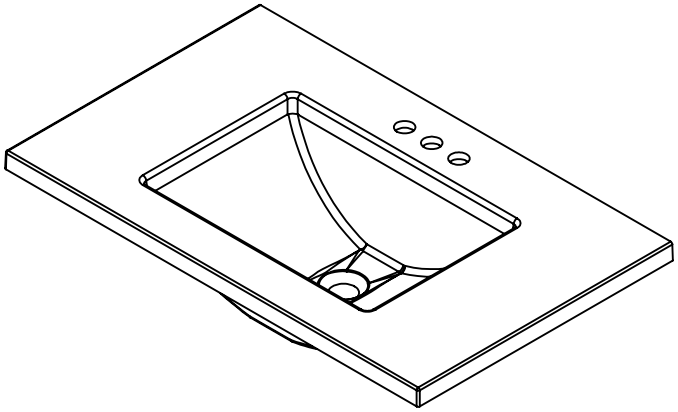

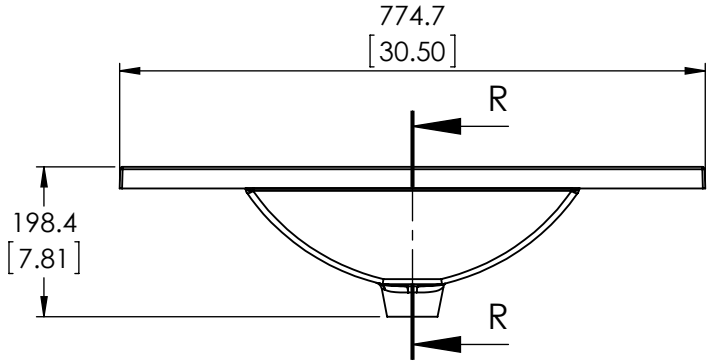

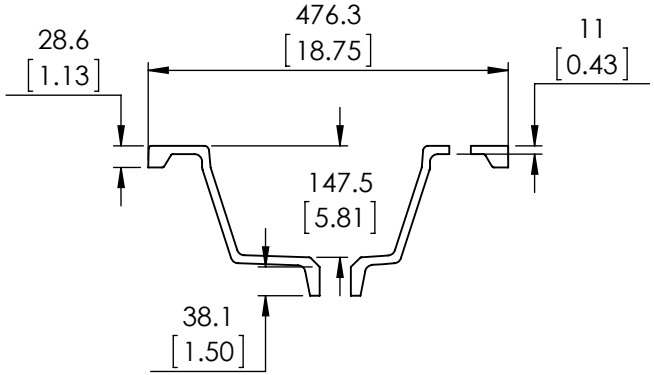

PROPRIETARY AND CONFIDENTIAL

THE INFORMATION CONTAINED IN THIS DRAWING IS THE SOLE PROPERTY OF WOODCRAFTERS. ANY REPRODUCTION IN PART OR AS A WHOLE WITHOUT THE WRITTEN PERMISSION OF WOODCRAFTERS IS PROHIBITED.

UNLESS OTHERWISE SPECIFIED

DIMENSIONS ARE IN MM. AND [INCHES]

TOLERANCES ARE + 3.175 [.125] - 3.175 [0.125]

SCALE:1:10

	NAME	DATE
DRAWN	O. RAZO	10/18/2020
CHECKED	E. SANDOVAL	10/18/2020
ENG APPR.	W. AMAYA	10/18/2020
MFG APPR.	A. CASIANO	10/18/2020

SIZE A | DWG. NO. FG | SHEET 1 OF 1