Choreograph™

96" Seam Joint

K-97636

Features

- Provides easy way to join wall panels to other full panels, accent panels, or shower lockers.
- Helps to conceal silicone.

Codes/Standards

None Applicable

KOHLER® Limited Warranty – Choreograph™ Walls and Accessories

See website for detailed warranty information.

Available Color/Finishes

Color tiles intended for reference only.

Color	Code	Description
	SHP	Bright Polished Silver
	0	White
	96	Biscuit
	47	Almond
	NY	Dune
	95	Ice™ Grey
	G9	Sandbar
	ABZ	
	BBR	
	BNK	

Choreograph™

96" Seam Joint

K-97636

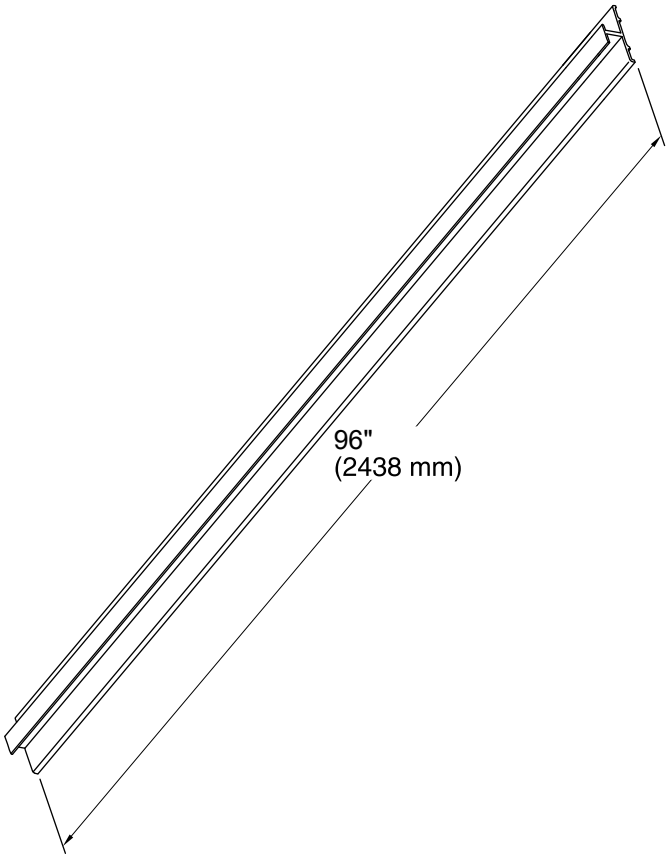

Technical Information

All product dimensions are nominal.

Notes

Install this product according to the installation guide.