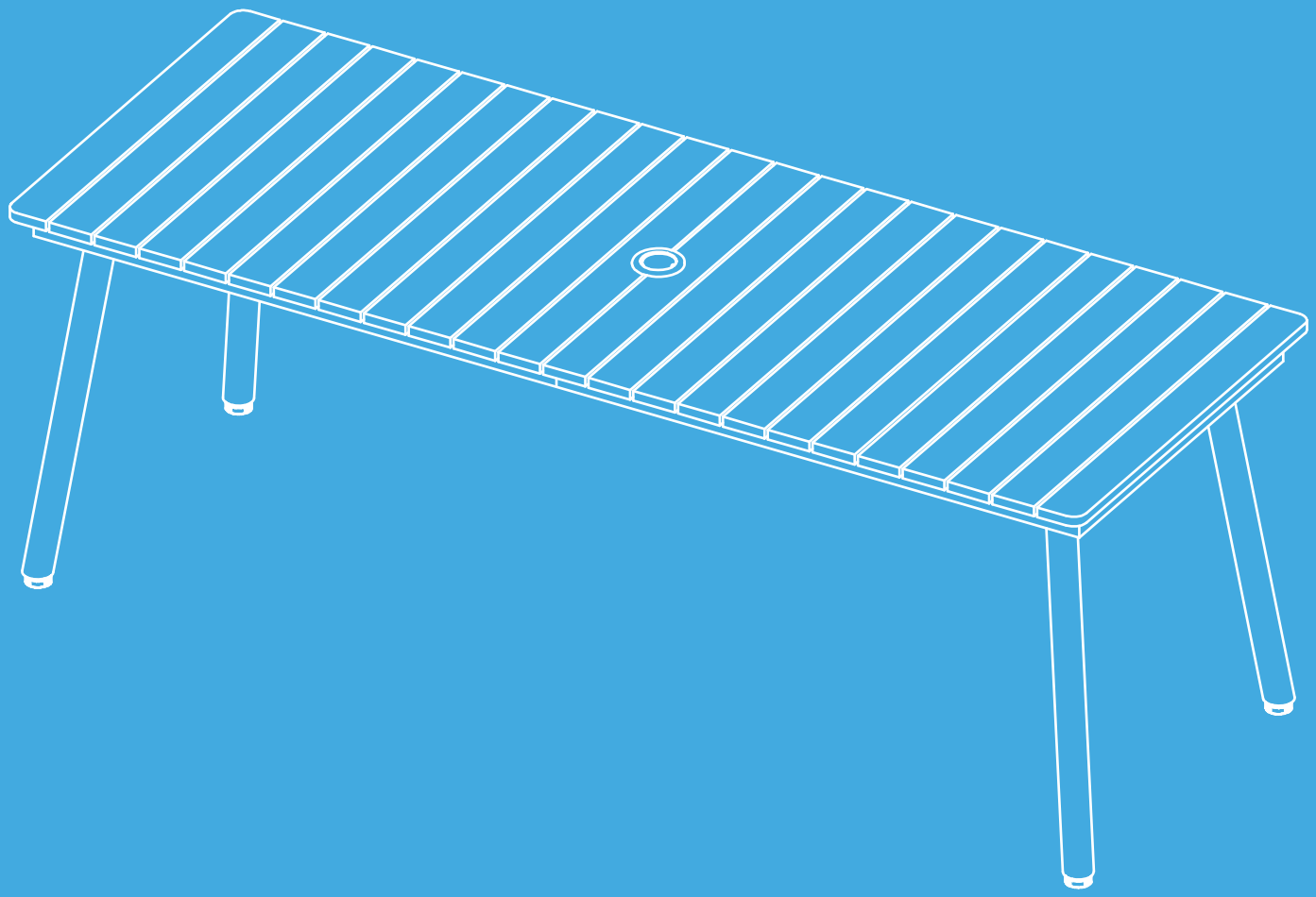

INSTRUCTION MANUAL

Dining Table

TB012-240

HELP CENTER

MISSING A PART?
GIVE US A CALL BEFORE
HEADING BACK TO THE STORE

The store where you made your purchase
does not stock parts for this item.
If you have assembly questions,
or if you are missing or have damaged parts,
please call

1-833-423-1158
(Mon-Fri,8:00 am to 5:00 pm EST)
needcare@peteroutdoor.com

Please contact us via email. Due to high call volume,
there may be a wait time for phone support.

Please have the following information ready when you contact us, so we can assist you promptly.

- *Purchasing platform*
- *Order number or Po number (you can find the info on your invoice, E-receipt or platform account).*
- *The model number of the product (printed on the package box).*
- *Description of the part from the parts list.*

BEFORE INSTALLATION

- Please list all parts as below first to check if any part is missing and make assembly easier.
- Do be careful that some parts are heavy and sharp.
- Please follow the assembly steps to install the product, if you find spare parts left, don't be worried, the left spare parts are prepared for bad ones if occurred.
- Please fully tighten all screws only when they are in place.
- Please do not exceed the bearing limitations of the product.
- Reconfirm that all bolts, screws, and knobs are secure every 90 days.
- Please retain these instructions for future reference.

CUSTOMER SERVICE FAQS

Q: Some parts are missing, I could not finish assembly.

A: Please kindly circle missing parts in the parts list of the manual, and send pictures to our service team. We will prepare and ship them to you for free ASAP.

Q: My item occurs a quality problem. I am not satisfied with it.

A: Please kindly take it easy and provide us pictures. We would help you to solve it by send replacement parts, replacement products or refund. And you do not need to take time to repack and return it back to us.

Q: The color is not the same as I ordered. How to solve it?

A: Please kindly help to provide us the pictures of the SKU number, the shipping label on the carton and also the product itself, better in one picture. Your pictures will help us to speed up solving the problem.

Q： How to prolong the service life of this item?

A: When it is stained with dusts, oil or sweat, please wipe with a damp cloth. You'd better use a cover when it is out of use.

If you have any problem with this product or our service, please don't be hasty in writing a negative review or feedback. Welcome to contact us right away, our service team will response within 24 hours, we will try our best to help you. Thank you for giving us a chance to improve the product and our service.

★ You're welcome to contact us at needcare@peteroutdoor.com

BEFORE ASSEMBLY NOTICE

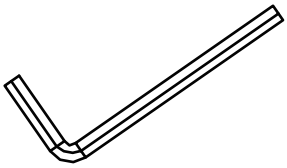



2 persons



30min assembly

PART LIST（NOT SHOW ACTUAL SIZE）

A X1

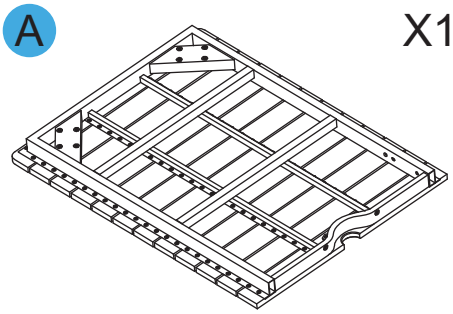

B X1

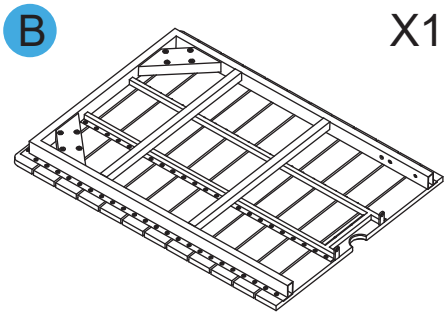

D X4

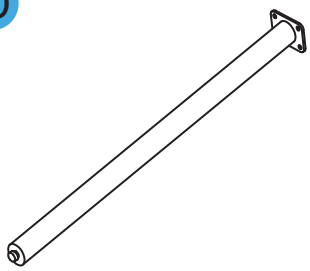

C X2



G X1

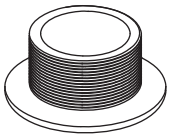

H X1



I X1



HARDWARE LIST（NOT SHOW ACTUAL SIZE）

E X26



M6

F X26

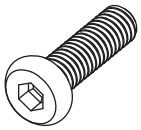

M6X18

Attention:

- Please do not tighten each screw during each installation step. After completing all installation steps, tighten all screws.
- To prevent scratching the tabletop, it's recommended to assemble on the packaging box or the protective packing materials inside.

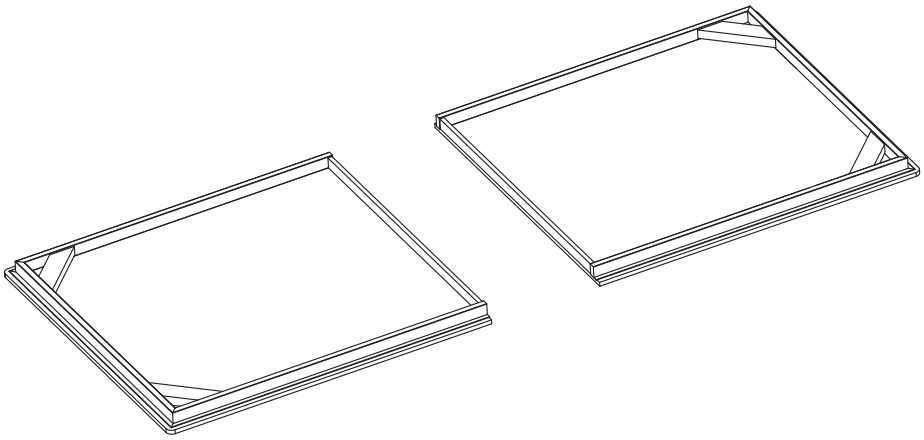

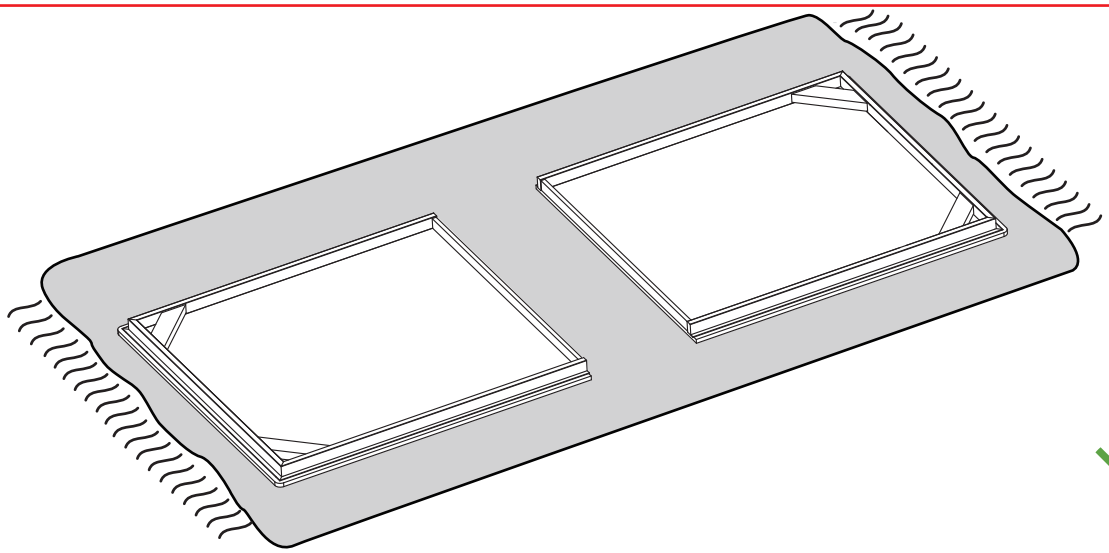

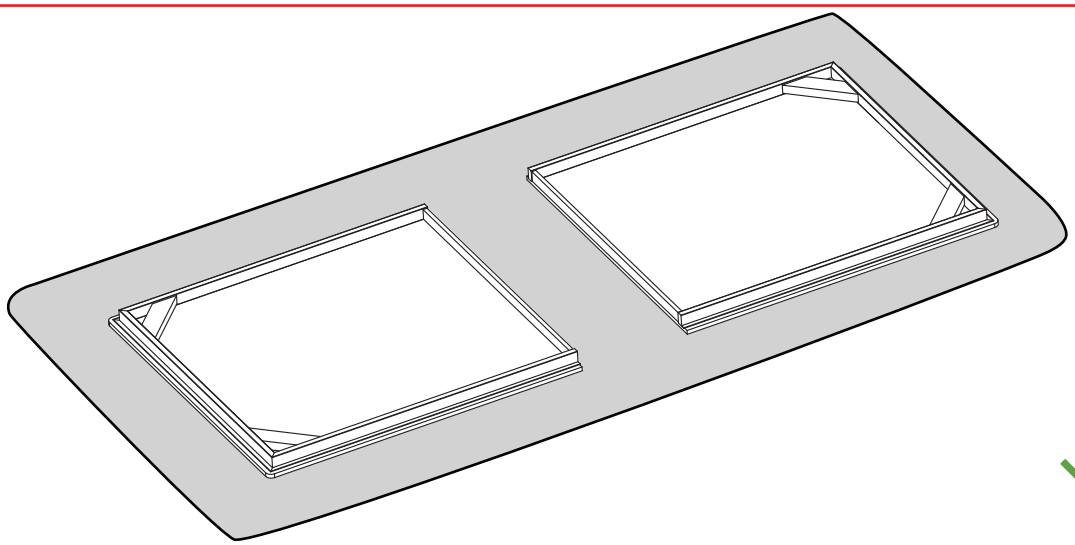

ASSEMBLY STEPS（NOT SHOW ACTUAL SIZE）

STEP 1

Don't tighten all screws until assembly is finished.

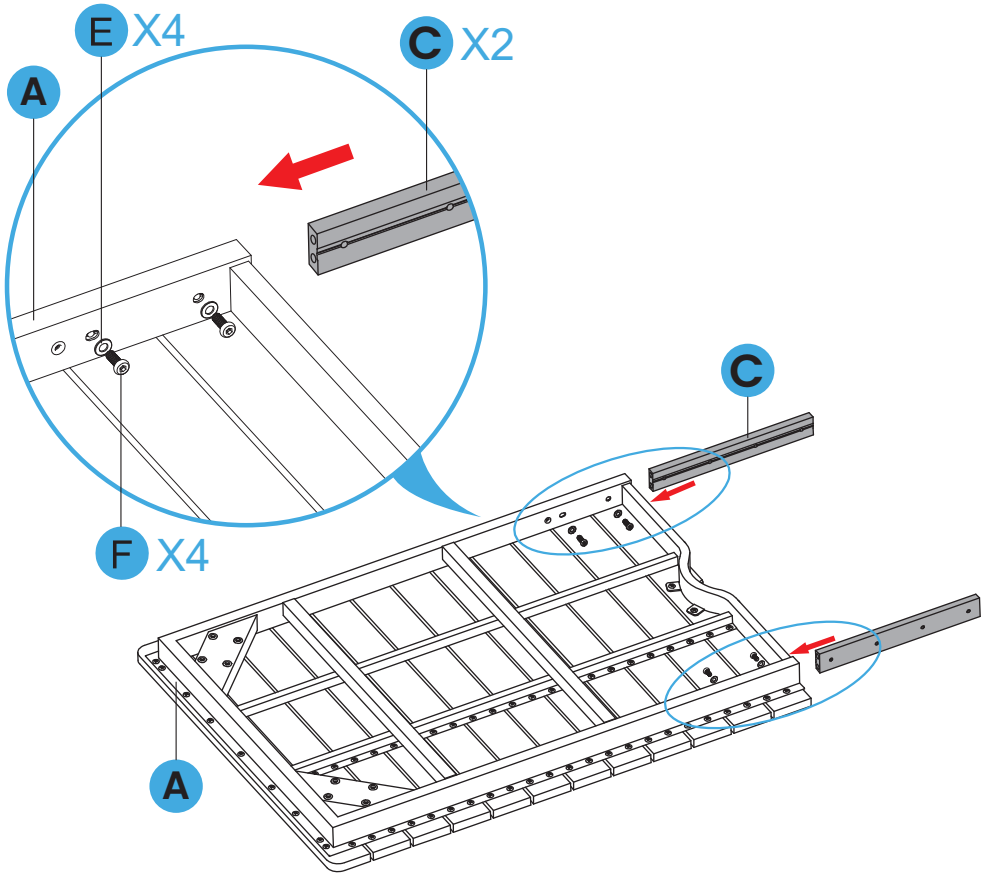

A X1

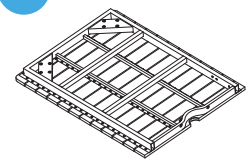

C X2



E X4



F X4



STEP 2

Don't tighten all screws until assembly is finished.

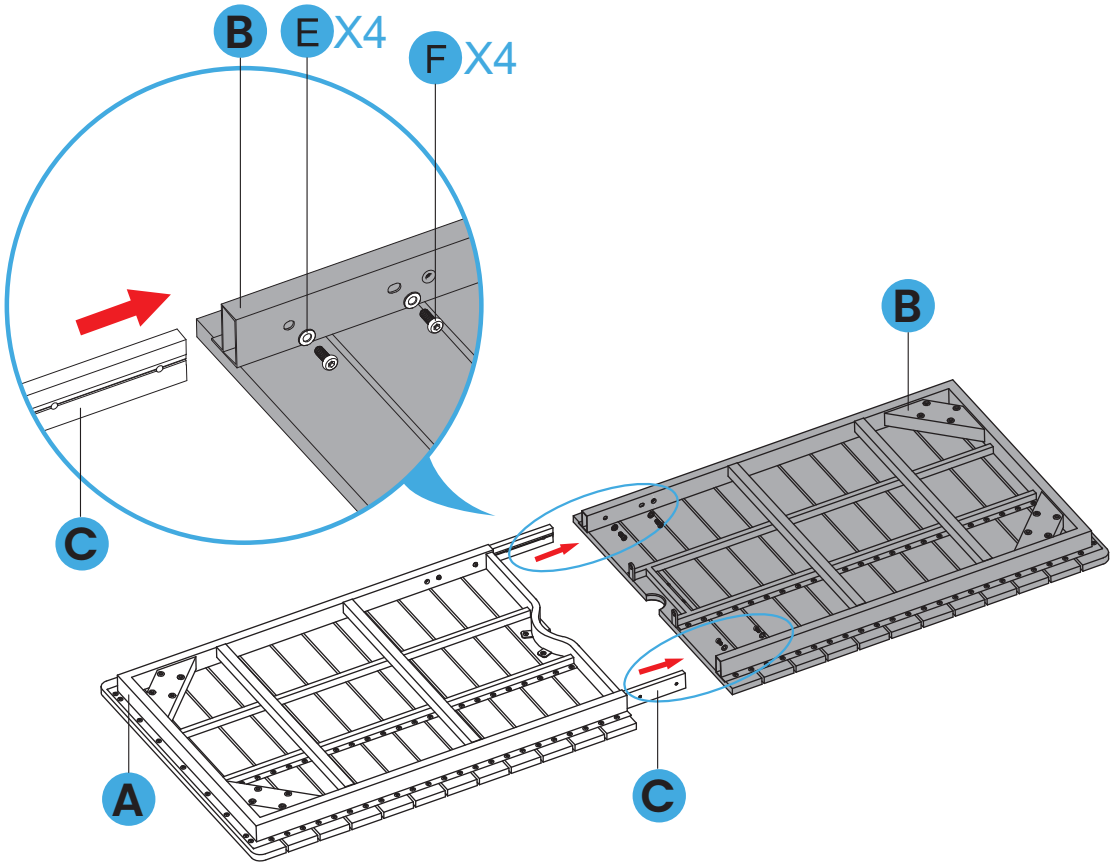

B X1

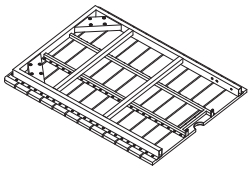

E X4



F X4



ASSEMBLY STEPS（NOT SHOW ACTUAL SIZE）

STEP 3

Don't tighten all screws until assembly is finished.

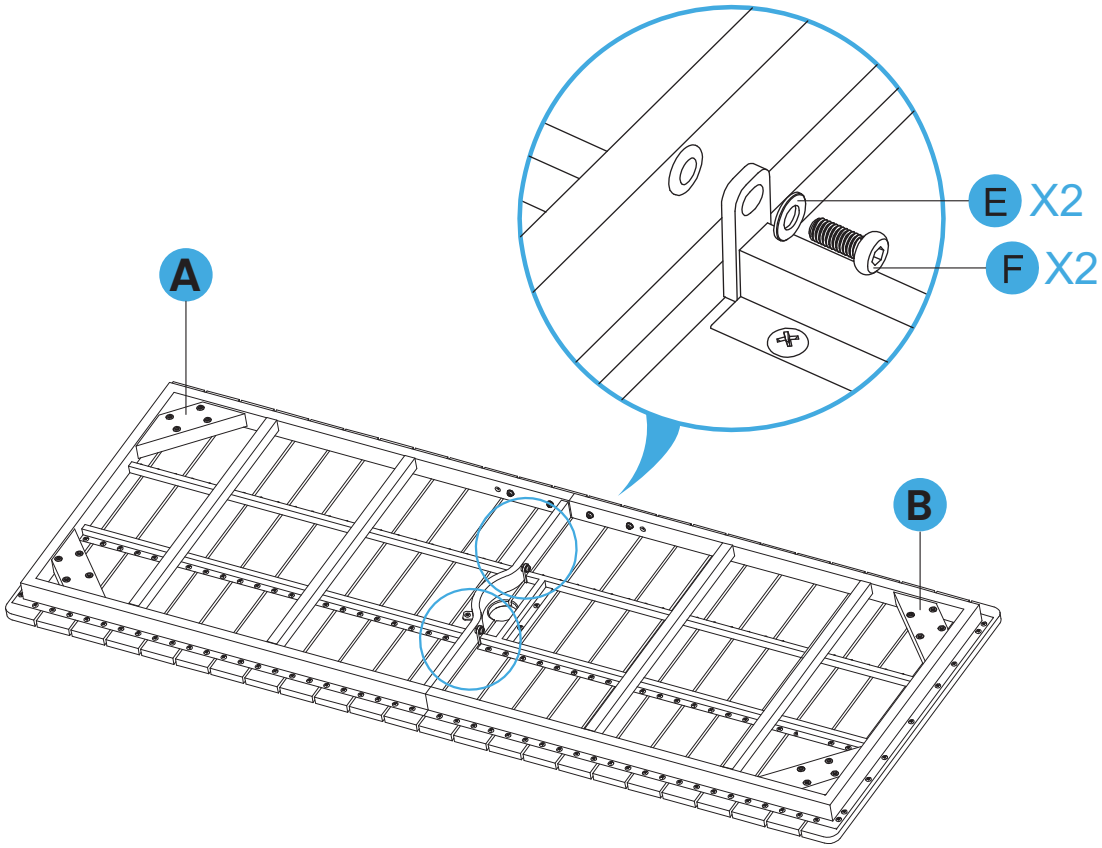

E X2



F X2



STEP 4

Please tighten all screws.

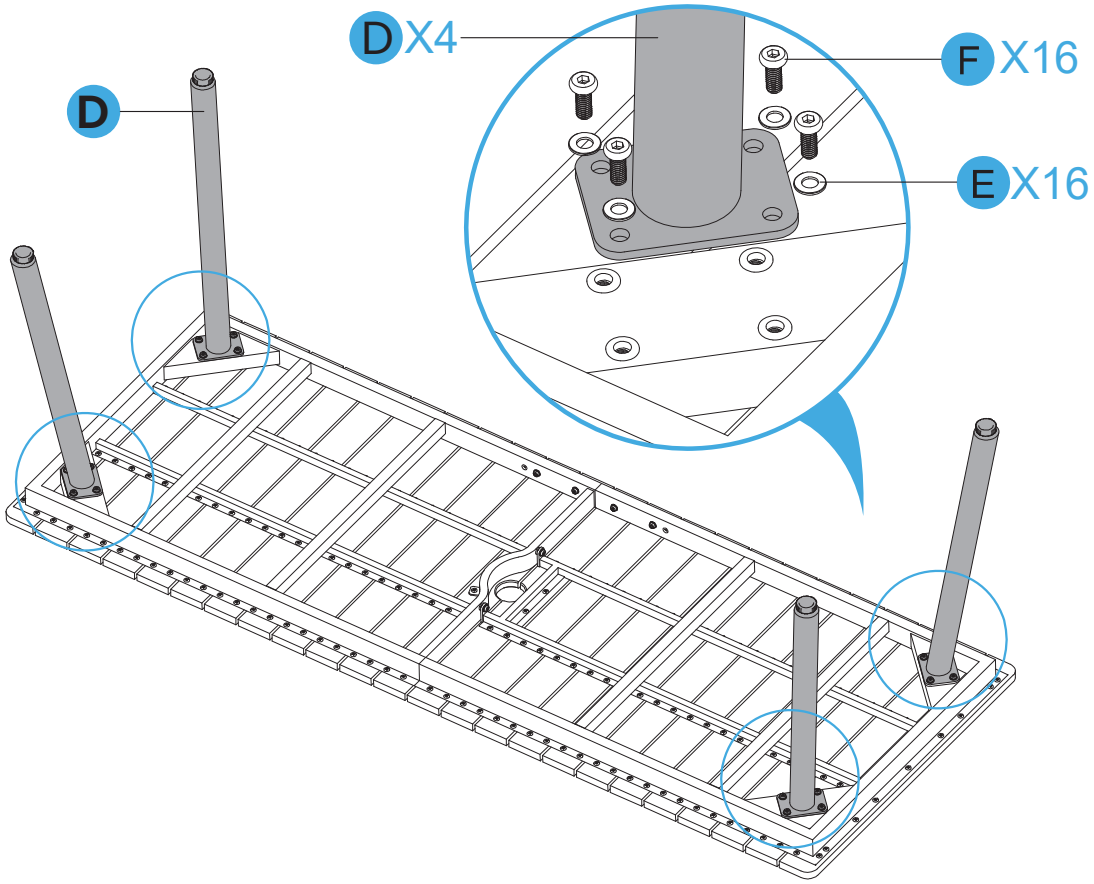

D X4

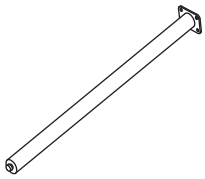

E X16



F X16



ASSEMBLY STEPS（NOT SHOW ACTUAL SIZE）

STEP 5

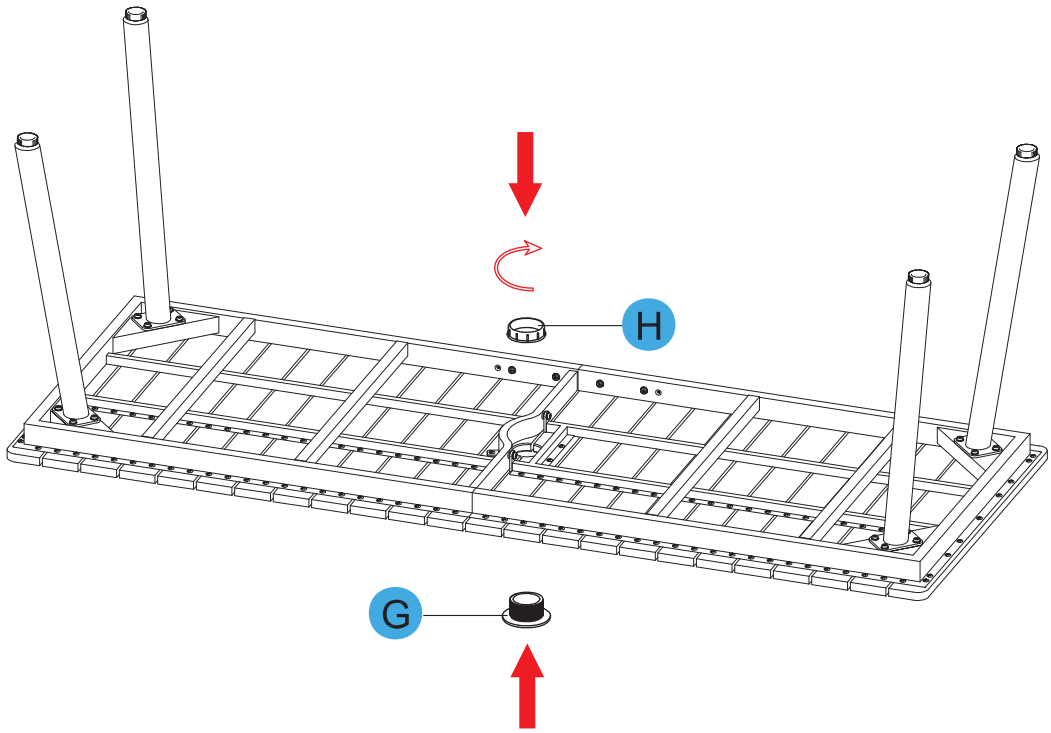

G X1



H X1



STEP 6

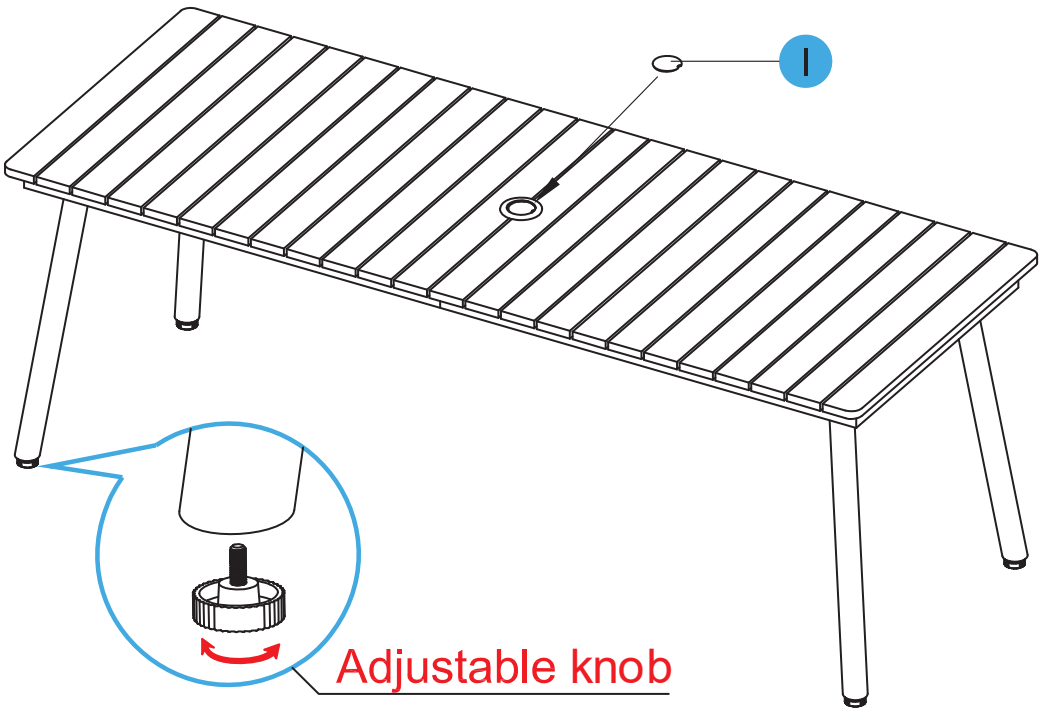

Rotate the adjustable knobs to keep the product steady.

I X1



Attention!

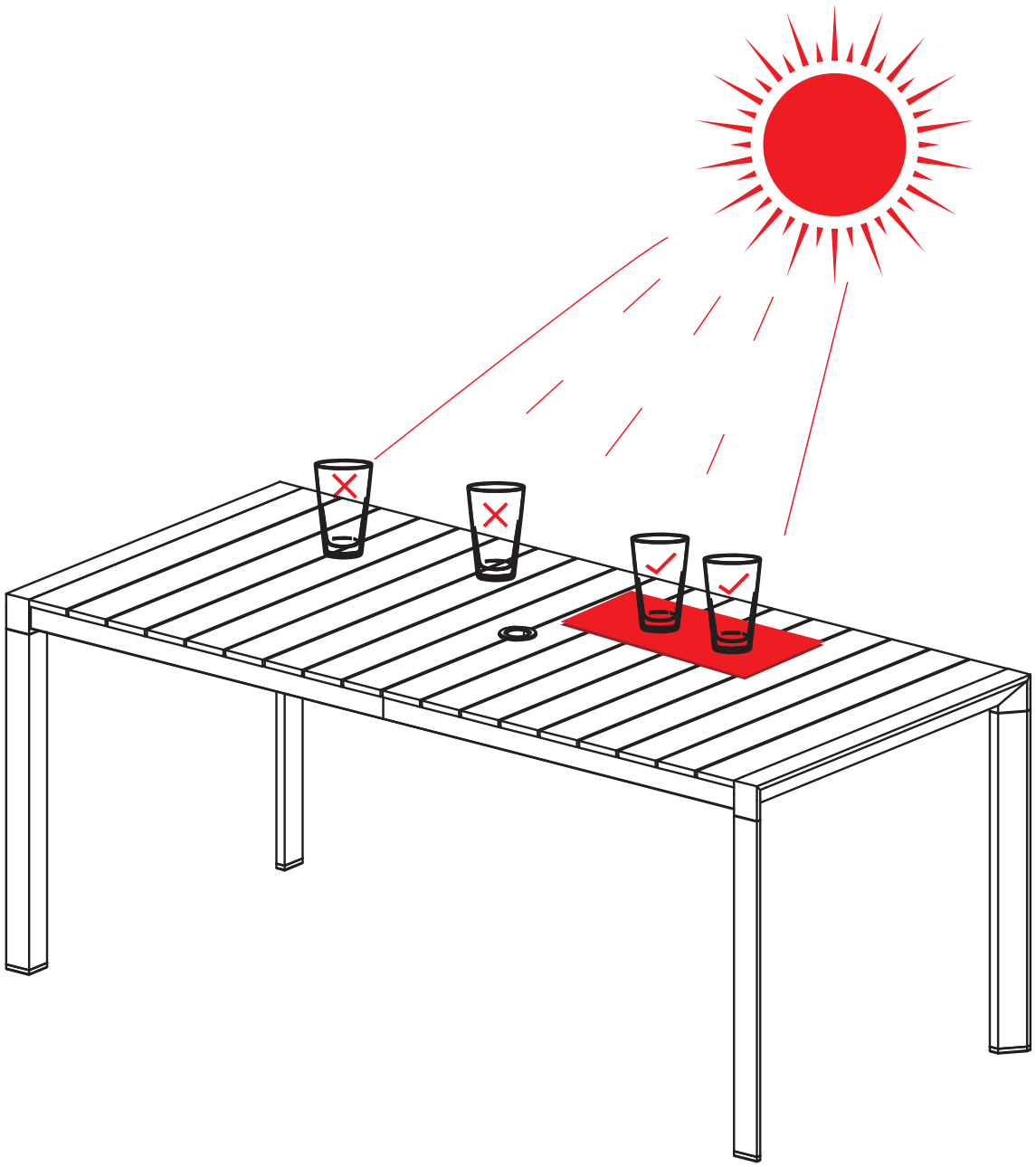

To prevent overheating and potential damage to the tabletop, it's recommended to use a coaster under the glass cup when leaving it on the surface for extended periods.

CARE & MAINTENANCE

- Do not put hot items directly on furniture surface.
- Do not clean furniture with harsh cleansers or polish.
- To obtain the longest lifespan of your products, minimizing exposure to direct sunlight is recommended.
- Children should not climb or jump on the furniture.
- Do not write on furniture without a padded barrier to protect the surface.
- Stains may be removed with mild soap solution and damp cloth.
- Keep away from sources of ignition.

PRODUCT WARRANTY INFORMATION

All items can be returned for any reason within 30 days since purchase date and will receive a full refund as long as the item is returned in its original product packaging and all accessories from its original shipment are included. All returned items will receive a full refund back to the original payment method. All returned items will be charged a re-stocking fee, $10 per piece.

All returns must be shipped back to our warehouse at the customer's expense. If the reason for return is a result of an error by us, then we will provide a prepaid shipping label via email. Boxes for return shipping will not be provided by us, and is the customer's responsibility to either use the original shipping boxes or purchase new Boxes.

Pictures may be required for some returns to ensure an item is not damaged prior to its return. Items returned are not considered undamaged until they are received by us and verified as such.

All damages to items are the customer's responsibility until the item has been received by and acknowledge by us as undamaged.

⚠ WARNING

The seller and manufacturer will not be liable for any personal injury, property damage or loss, which result from the incorrect assembly, improper use, inadequate maintenance, or neglect of the product. Whether it's direct, indirect, or incidental.