Flooret.

SILVAN
RESILIENT HARDWOOD COLLECTION











Silvan Hardwood Collection

Installation, Care, and Maintenance

INTRODUCTION

Welcome

Congratulations on your purchase of Silvan Resilient Hardwood™. Your premium resilient hardwood floors are designed to exceed industry standards. They should provide decades of easy maintenance and service. Please read the following instructions carefully before beginning installation.

GENERAL

Guidelines

Silvan Resilient Hardwood should only be installed indoors, **NEVER** outdoors. Carefully inspect all planks prior to installation. Please note that this is a natural product and slight plank to plank variations in color, grain, and other natural characteristics are expected. If any defects are identified, do not install! Contact Flooret immediately.

• Remove quarter round, baseboard molding or cove base.

• Undercut doorway moldings to match the thickness of the floor.

• Boxes must be stored horizontally at all times. Storing vertically can damage the click mechanisms.

Per industry standards, installation of flooring constitutes acceptance of visual defects.

Please inspect all planks carefully prior to installation.

• Silvan must be acclimated to the climate of the installation area for at least 48 hours prior to installation.

• Silvan should be installed in an indoor, climate-controlled location that is between 65°-85°F with a relative humidity (RH) of 35° to 65°.

• In bathrooms, caulk the perimeter of the room where the flooring meets the baseboard to protect the planks from excess moisture.

• Only install after your job site has been thoroughly cleaned, so no damage occurs during installation.

• During installation, open 2-3 boxes at a time and mix planks from each to ensure an aesthectically pleasing natural color and grain variation.

• Maximum run length is 80 linear feet. Larger installations require a transition piece.

• In areas up to 15 linear feet (225 SF), leave 1⁄4" expansion space between Silvan Resilient Hardwood and all perimeter walls and neighboring floors.

• In areas that are 15 to 50 linear feet (225 - 2500 SF), add 1/16" for each additional 5 ft (25 SF) over the original 225 SF.

• In areas that are 50 linear feet (2500 SF) or more, use a minimum expansion space of 1".

• Glue-down installations require an expansion space of 5/16"-3/8".

• Ensure the subfloor is flat to within 1/16" over 6 ft.

BEFORE YOU INSTALL

Prior to Installation

For floating installations, first install your vapor barrier *(required)* and underlayment *(recommended)*.

Flooret offers compatible underlayment options, but any underlayment designed for hardwood flooring will work as long as it has a minimum compressive strength (CS) of > 60 k Pa.

Most problems with flooring installations are a result of poorly prepared subfloors. Prior to installation, the installer must ensure that the job site and subfloor meet the requirements of these instructions. Flooret is not responsible for flooring failure resulting from unsatisfactory job site and/or subfloor conditions. Please follow the specific prep instructions for your subfloor.

BEFORE YOU INSTALL

Prior to Installation

Machining wood products produces wood dust. IARC and the state of California have classified wood dust as a human carcinogen. Equipment should be fitted with a dust collector to reduce airborne wood dust. Wear an appropriate NIOSH designated dust mask to reduce exposure to airborne wood dust. Avoid contact with eyes and skin. In case of irritation, flush with water for at least 15 minutes. In cases of severe irritation, seek immediate medical attention.

INSTALLATION

Preparation

Please note that many old resilient floors were installed using “cutback” adhesives that may contain asbestos.

Please consult with a professional prior to attempting to remove these old asbestos adhesives.

Each room must be heated to normal living conditions at all times before, during, and after installation. Carefully examine the flooring prior to installation for color, finish, sheen, and quality. Ensure adequate lighting for proper inspection. If the flooring is not acceptable, contact Flooret immediately and arrange for a replacement.

General Subfloor Requirements:

• All subfloors must be dry, clean, smooth, level, free from all existing adhesive residues, and free from movement or deflection.

• The subfloors must be level within 1/16” in 6’.

• Fill and level all plywood seams and concrete cracks, construction joints, control joints, depressions, grooves or other irregularities.

INSTALLATION

Preparation

Before Installing:

Determine in which direction the planks will be installed. To make the room appear larger or if installing in very small rooms or hallways, it is preferable to lay the planks parallel to the longest room dimension. Do not install cabinets on top of the flooring. Doing so will limit expansion space and may cause water to collect underneath cabinets. Carefully measure the room to determine squareness and the width of the last row of planks. If the width of the last row is less than 2”, the width of the first row of planks will have to be cut accordingly. Think ahead of visual focal points, where having the floor be parallel to a wall is a priority (entries, long hallways, kitchen islands, etc). Measure in advance to ensure that when the installation reaches these spaces the floor is still parallel. If not, adjust your first row accordingly. When in doubt, start installing from an outside wall, which is usually the straightest.

A Note on Floor Layout:

Follow these installation guidelines to ensure a floor that has a random layout with no visual patterns that catch the eye:

• Stagger end joints so they are at least 16” apart. You can usually use the cut end of the previous row to start your new row, but only if the end joints of are at least 16” apart.

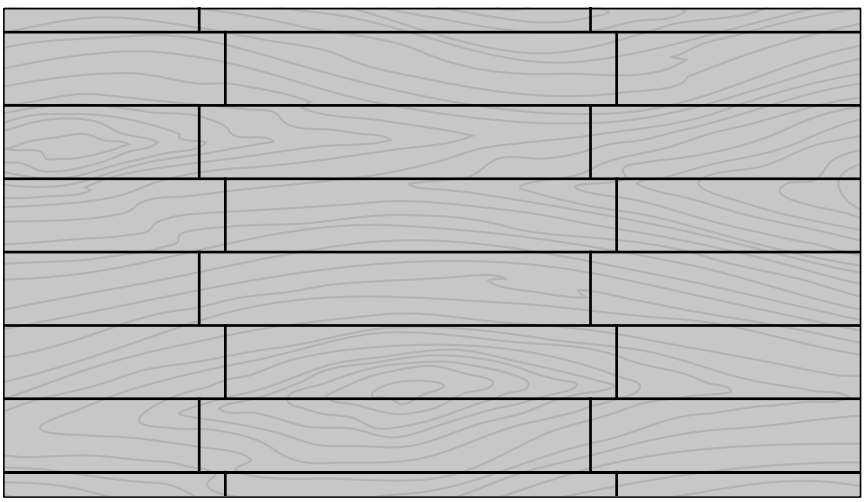

INSTALLATION

Preparation

A Note on Floor Layout (Cont'd):

• Avoid H-patterns by looking 2 rows back, and ensuring joints are not within 3" of that row's end joints.

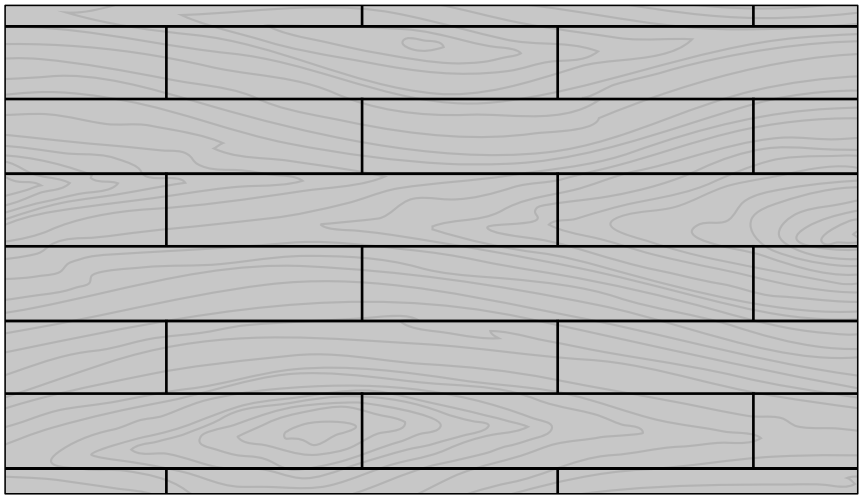

***Note:** It is highly recommended to "dry lay" the floor prior to installing. This will give you an opportunity to change plank color layout, and spot any installation pattern mistakes. It is the installer's responsibility to determine the expectations of what the finished floor will look like with the end-user first and cull out any undesirable pieces. During installation, inspect the click mechanism and remove any debris that may prevent proper assembly of planks.*

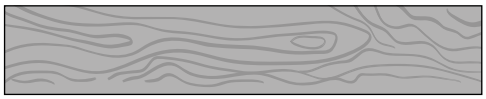

REQUIREMENTS

Wood Subfloors

Silvan Resilient Hardwood can go over virtually any sound wood underlayments/subfloors.
Always fasten underlayment in accordance with the manufacturer's recommendations to avoid squeaking and movement. Ensure the wood subfloor is flat, dry and sound. Moisture content of wood subfloors must be less than 13% Moisture Content (MC) at 68°F.

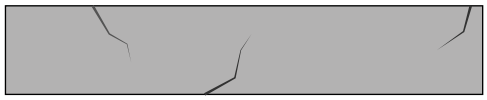

REQUIREMENTS

Concrete Subfloors

Silvan can be installed on almost any subfloor (i.e. wooden floors or cement concrete floors). Ensure that subfloor is level, flat, dry and clean.

Any imperfections in the subfloor greater than 1/16" over 6' length should be either smoothed with patching or leveling compound or ground/sanded down mechanically.

• Concrete subfloors must be hard, dense, and free from powder or flaking.

• New concrete slabs must be thoroughly dry (at least 60 days) and completely cured. The final responsibility for determining if the concrete is dry enough for installation of the flooring lies with the floor covering installer.

• Holes, grooves, expansion joints, and other depressions must be filled with a Portland cement, troweled smooth, and feathered evenly with the surrounding surface.

• Concrete/slab on or below grade may have a max of 80% RH at 68°F.



REQUIREMENTS

Existing Subfloor

Silvan can be installed over most hard surfaces including resilient floor coverings such as LVT, SPC, VCT, linoleum provided they are glued down, sufficiently fixed, completely level and have no loose areas. The surface must be in good condition and show no signs of excessive moisture conditions. Do not install flooring over heavily cushioned floors such as rubber or cork. Do not install over any type of carpet. The grout joints in ceramic tile and marble must be leveled so they are flush with the tile surface. Additionally, the tile may require several skim coats to achieve a flat surface.

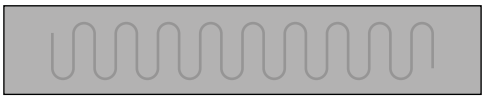

REQUIREMENTS

Radiant Heated Systems:

Silvan can be installed over water based or electric floor heating systems. The underfloor heating system must be flat and well distributed in the subfloor. Both a room sensor (thermostat) and a floor sensor (for max temperature limitation) must be installed to prevent the surface temperature from exceeding 80°F.

***Note:** Heating systems will cause extra shrinking due to increased dryness. During the winter (heating period) the use of humidifiers is recommended. Underfloor heating must never be installed under kitchen cupboards or similar areas.*

We recommend covering the water-based floor heating systems with the pipes positioned in profiled particle floorboards with heat distributing aluminium sheets and a loadbearing profiled (i.e. tongue/ groove) particleboard or plywood that is at least 0.24” (6 mm) thick.

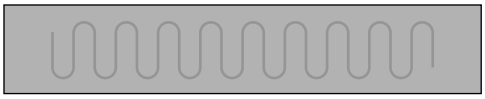

REQUIREMENTS

Radiant Heated Systems:

Electric heating mats that are not embedded into the subfloor are not recommended for use underneath Silvan Resilient Hardwood. Using electric heating mats that are not embedded and applied directly underneath Silvan floors could void the warranty for your floor in case of failure. It is best to install floor heating systems and adhere to the guidelines listed on the previous page.

Specification

- 7” & 6” Wide
- 7.21” x 78.74” (183 mm x 2000 mm)
- 9.2 mm thick
- 0.6 mm Hardwood Wear Layer
- 27.13 SF per box
- 51 lb per box

Tools

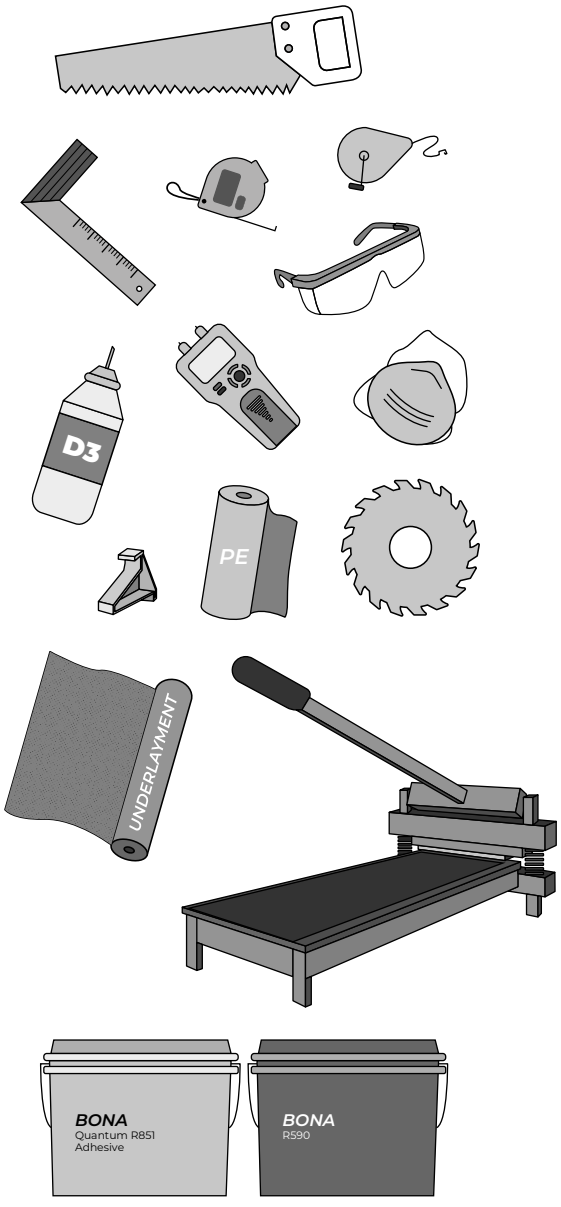

- Miter, Table, Jig, or Hand Saw
- Flooring Guillotine
- Metal or Diamond Saw Blades
- Tape Measure, T Square, & Set Square 45° & 90°
- Moisture Meter
- White Glue (D3)
- Straight Edge & 1/2” Spacers
- Safety Glasses & Dust Mask
- PE Film (Floating)
- Underlayment (Floating)
- Chalk Line (Glue-Down)
- Bona, Quantum R851 Adhesive (Glue-Down)
- Bona, R590 (Glue-Down)

FOLLOW THE STEPS

Click Installation

Silvan Resilient Hardwood is engineered to be installed utilizing the floating method but may also be installed as a glue down floor. Do not install cabinets or fixed objects on top of Silvan unless it is glued down. Proper expansion space is required. Undercut all door jambs. Do not fasten wall moldings and or transition strips to the floor and planks.

Step 1

Start in a left corner with the tongue side against the wall and work to the right. Press down a spacer to the left to create an expansion space of at least 1/2" (8-10mm) ***(refer to the guidelines on page 1)***.

Silvan utilizes a simple drop click system that does not require the short end to be tapped in, but rather aligned above the adjacent click and dropped into place to lock in.

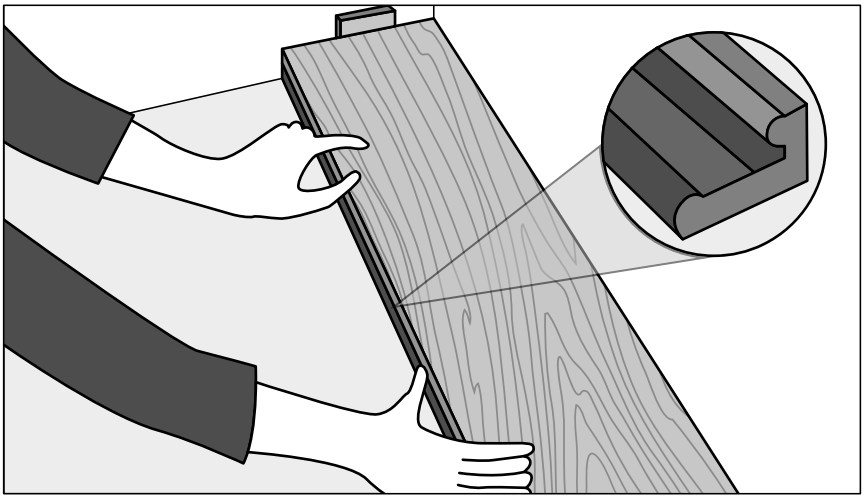

Step 2

Second plank, first row. Place the plank gently and tight to the short end of the first one.

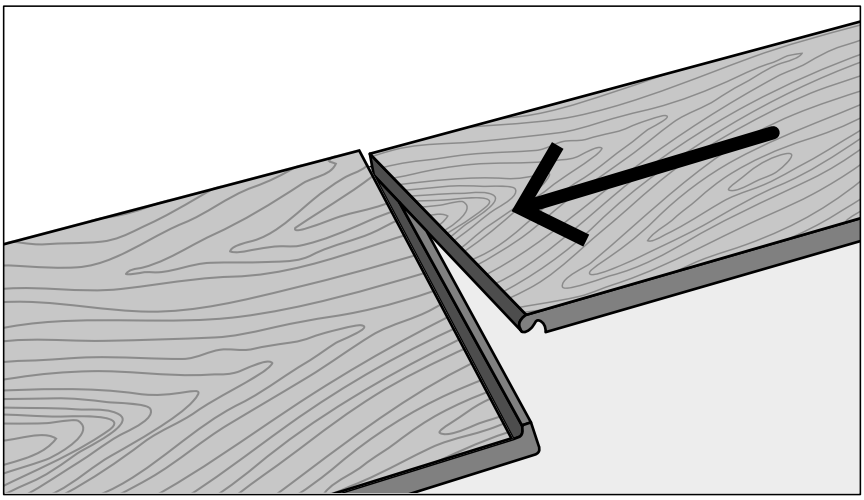

Step 3

Fold the plank down in a single movement. Make sure the planks are tight against each other.

Afterwards, press or slightly knock at the short end just installed. You should hear a click as the short end locking system engages.

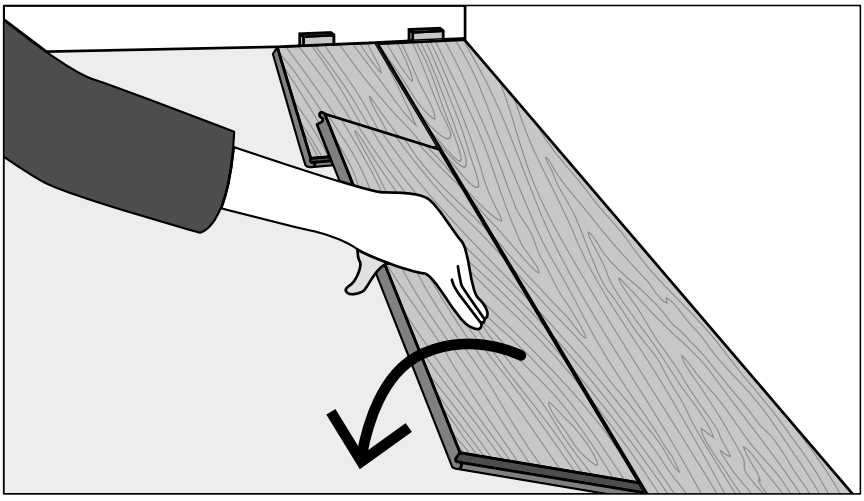

Step 4

At the end of the first row, put a spacer against the wall and measure the length of the last plank to fit.

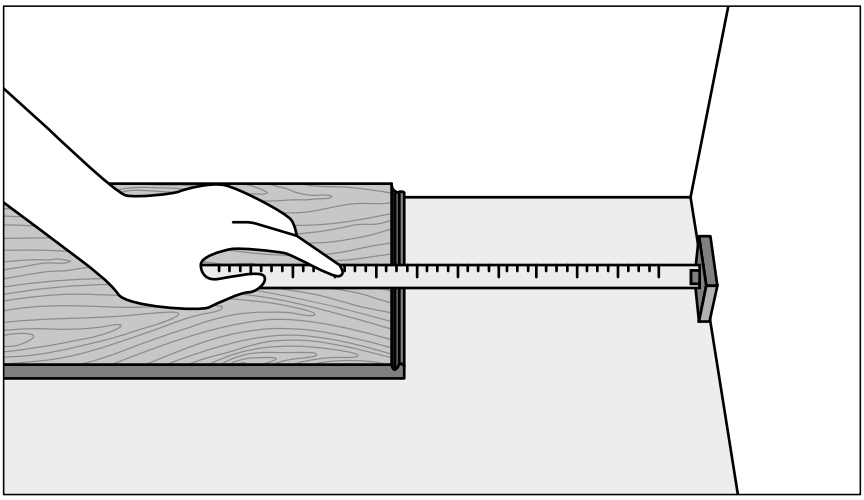

Step 5

Cut the plank with a jig saw (decor side turned down) or with a hand saw (decor side upwards).

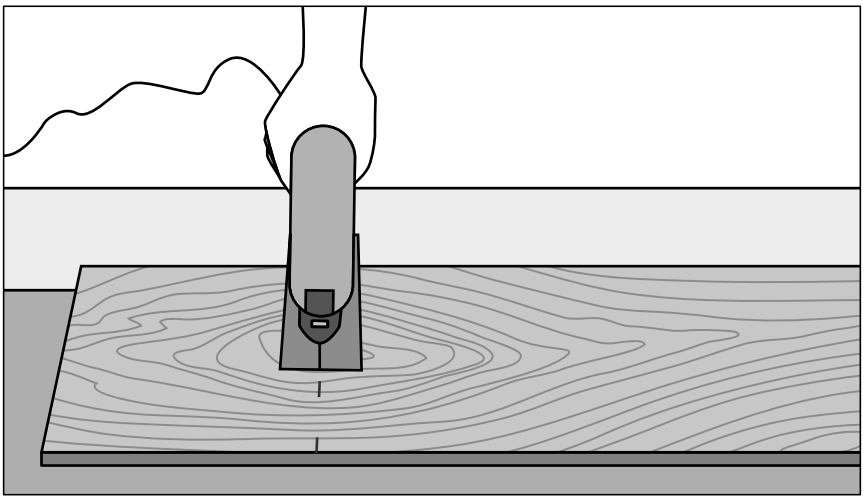

Step 6

First plank, second row. Start with the rest of the cut plank from the first row. Note that there must be at least 16” between plank joints.

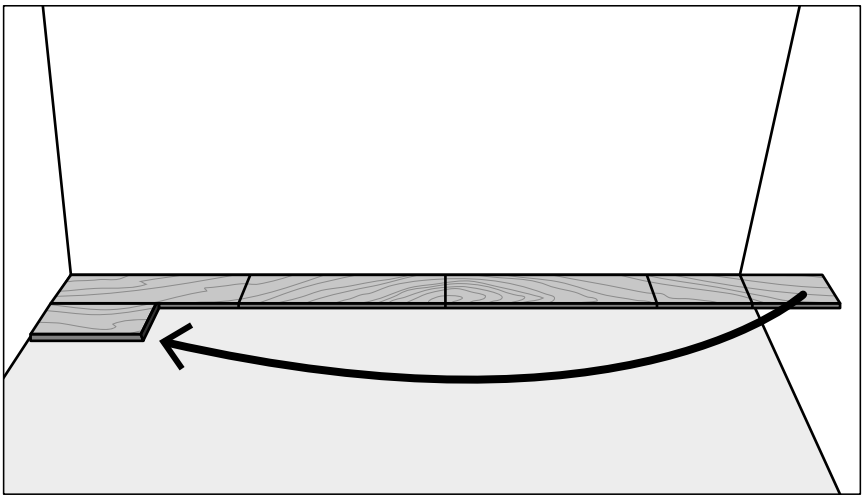

Step 7

Second plank, second row. Place the plank gently and tight to the short end of the previous plank. You should hear a click as the short end locking system engages.

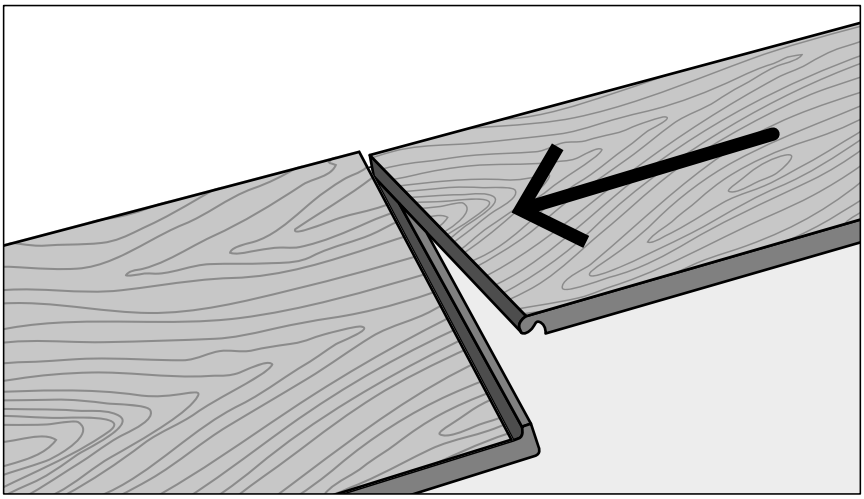

Step 8

Fold the plank down in a single movement with a slight press to the left to the short end of the previous plank. Make sure the planks are tight against each other both during and after this step.

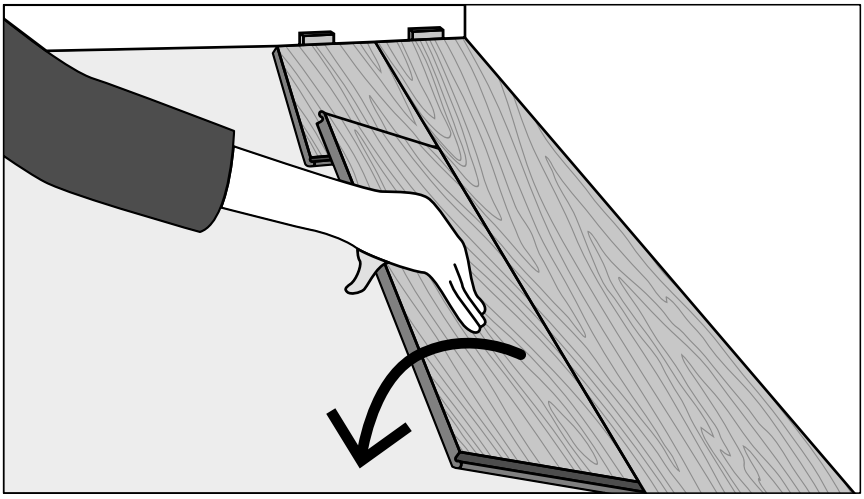

Step 9

After 2-3 rows, adjust the distance to the front wall by placing spacers to create an expansion space of at least 1/2" (8-10 mm) ***(refer to guidelines on page 1).***

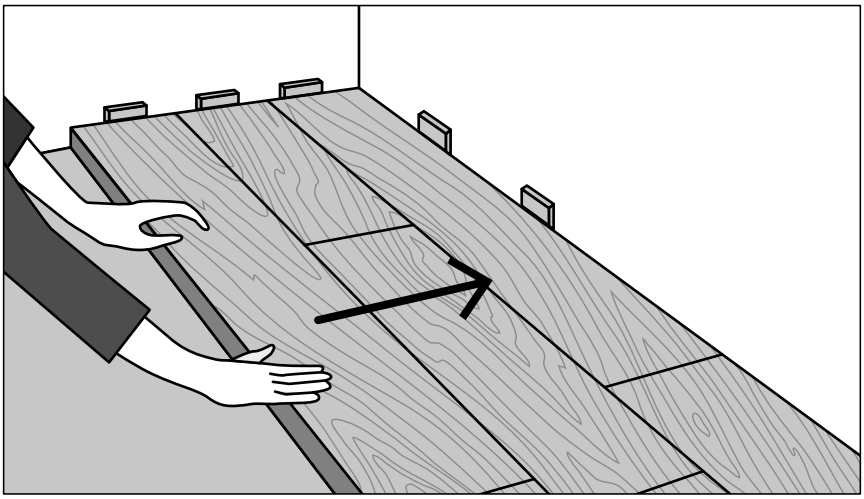

Step 10

The first and last row may need to be adjusted at an uneven wall. Copy the wall line to the first or last plank row with the shown tool, disassemble planks, adjust and reinstall.

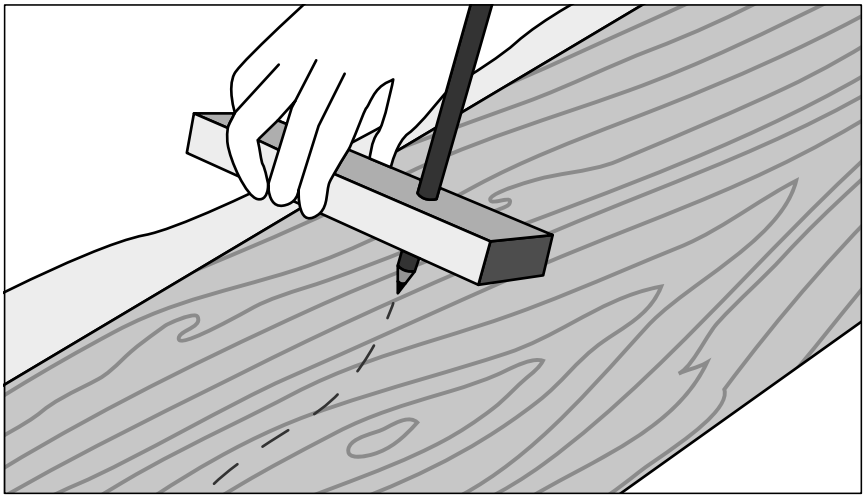

Step 11

You can also use a folding rule to adjust the planks for the first and last row.

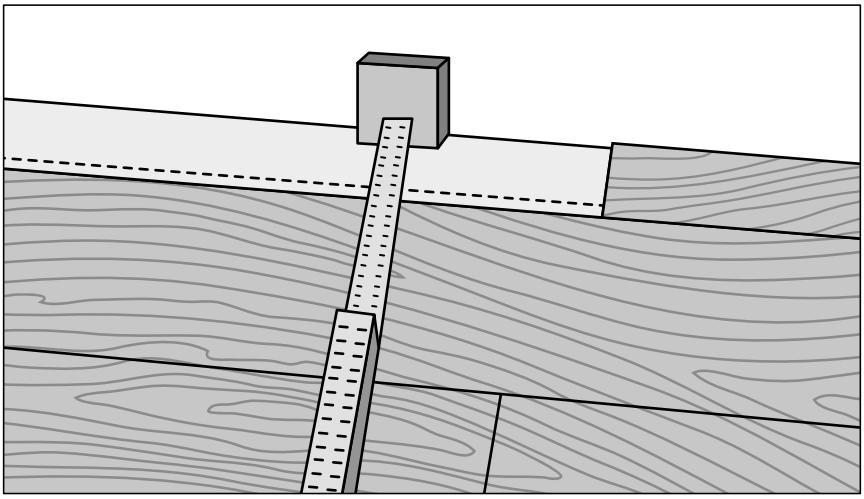

When Angling Is Not Possible

Remove the locking element/hook as shown. Use white PVAc glue to connect the planks. Place wedges between the glued plank and the wall.

Step 1

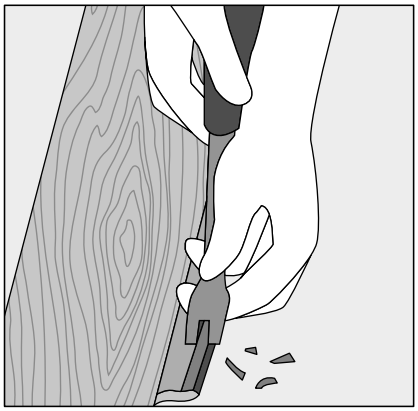

Step 2

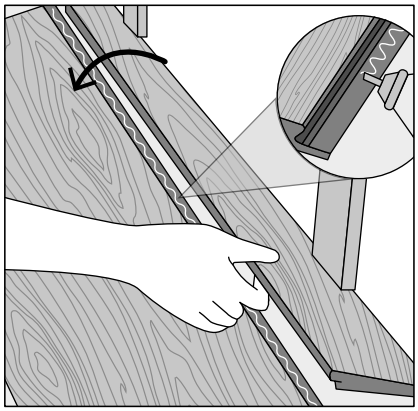

Reverse Installation

When installing planks in reverse, start from the left and work to the right. Connect the longside by angling the groove into the tongue of the previous plank. Fold down the plank.

Connect the long side first, then slide the plank to the left to the short end of the previous plank. Make sure the planks are tight against each other. Afterwards press or slightly knock at the short end to ensure a tight fit.

Step 1

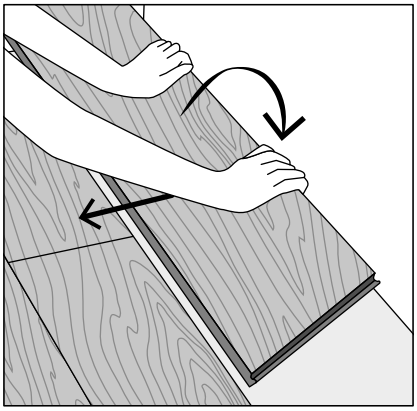

Step 2

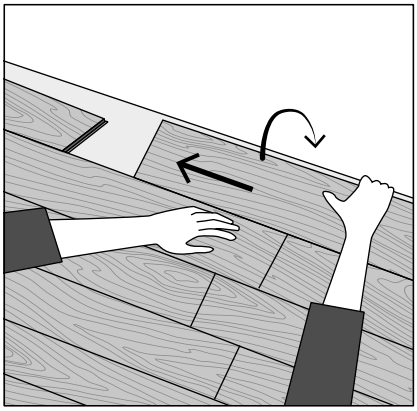

Installing Around Pipes/Tubes

Mark the center point of the tubes on the plank. Drill holes 1” (20 mm) bigger than the tube diameter (for an expansion gap of 1⁄2 ” (10 mm)). Cut according to the picture. Use white glue and replace the floor pieces. Cover the holes with pipe collars or fill with a joint sealer.

Step 1

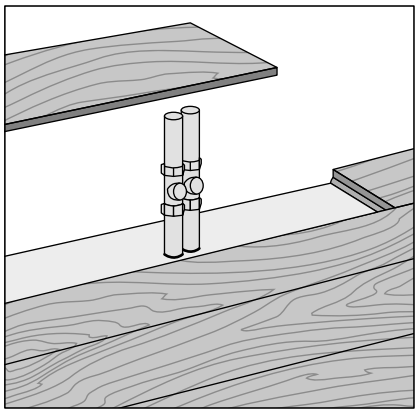

Step 2

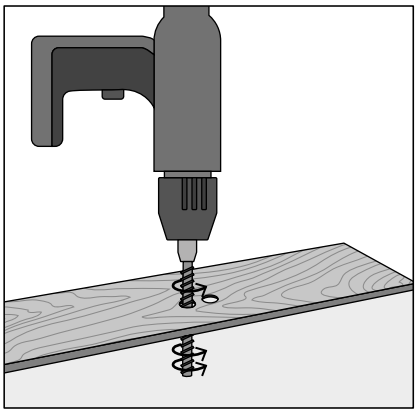

Step 3

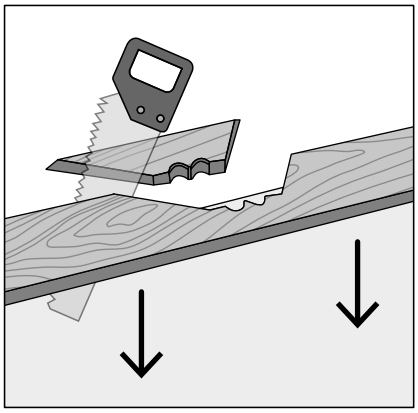

Step 4

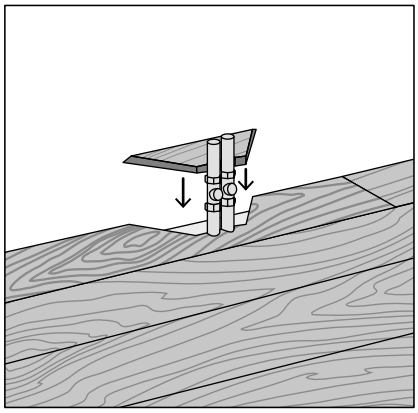

Step 5

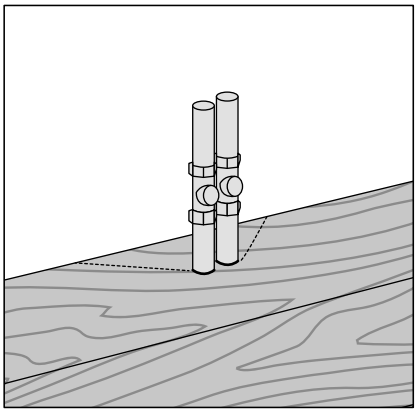

Uninstalling Planks By Hand

When a plank is locked, it is not possible to take it up by hand. Separate the whole row by carefully lifting up and slightly knocking just above the joint. Fold up and release the whole long side of the row.

After the whole long side is released you can disassemble each plank by angling the short sides up vertically.

Step 1

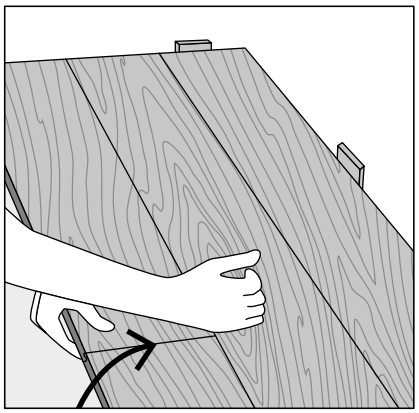

Step 2

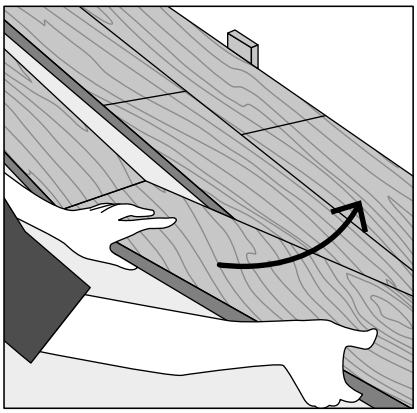

Uninstalling Planks: 5G Tool

Insert the dismantling tool into the space between the tongue and groove on the short end of the plank.

The plank is now loose and can be easily lifted up.

Step 1

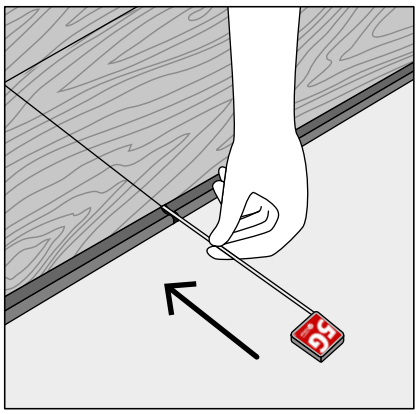

Step 2

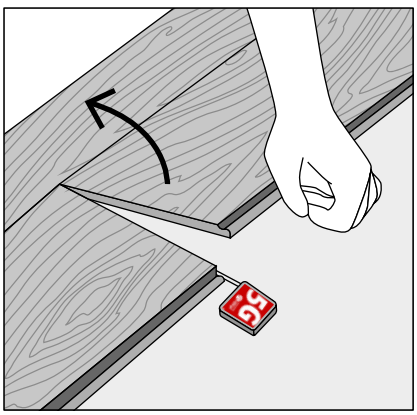

FOLLOW THE STEPS

Glue-Down Installation

Silvan is engineered to be installed using the floating method but may also be installed as a glue down floor. We recommend Bona Quantum 851 (or equivalent) adhesive plus Bona R590 (or equivalent) for your liquid moisture barrier. Here are a few things to keep in mind during your glue-down installation.

• Always glue Silvan directly to your subfloor.

• DO NOT glue the tongue and groove together between planks.

• There is no maximum run length for glue down installations.

• Do not apply more adhesive than can be worked with in 10-15 minutes.

• For a good final result, the first few rows must be placed very precisely.

• Dry lay the first few rows first.

• Immediately clean any spilled adhesive during installation.

Step 1

Using starting wall as reference, snap chalk line on subfloor at distance X from wall as shown. Align straight edge with chalk line and secure to subfloor.

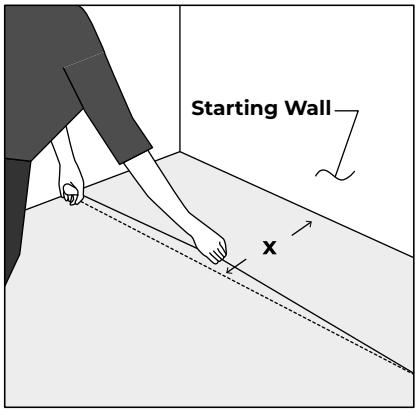

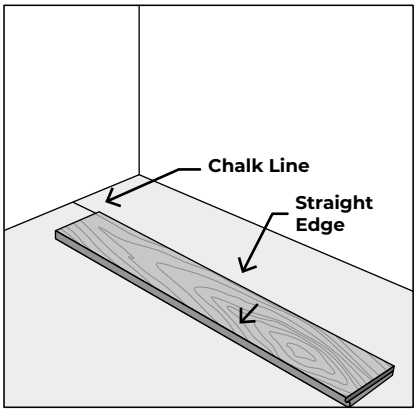

Step 2

First plank, first row. Start in the left corner with tongue side facing wall and long groove side directly up against the straight edge. Spread enough adhesive for one plank width. Use only as much adhesive as can be worked with during the adhesive's specified open time.

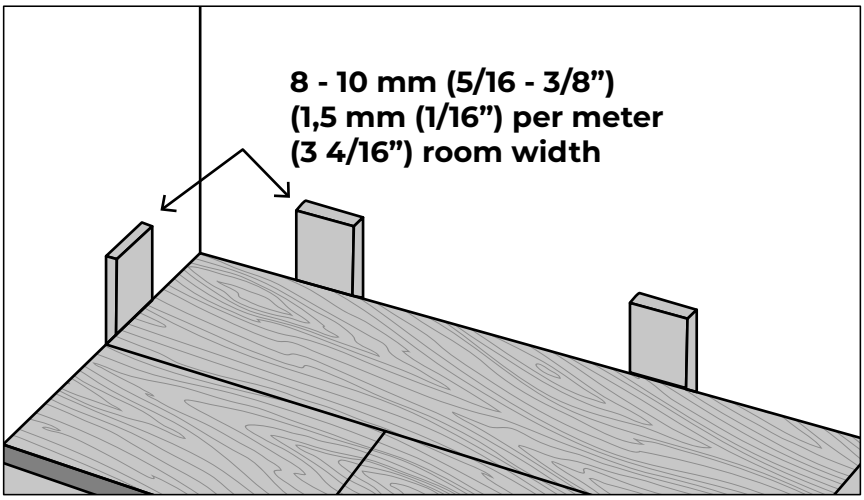

Step 3

Second plank, first row. Place the plank tight to the short end of the previous plank.

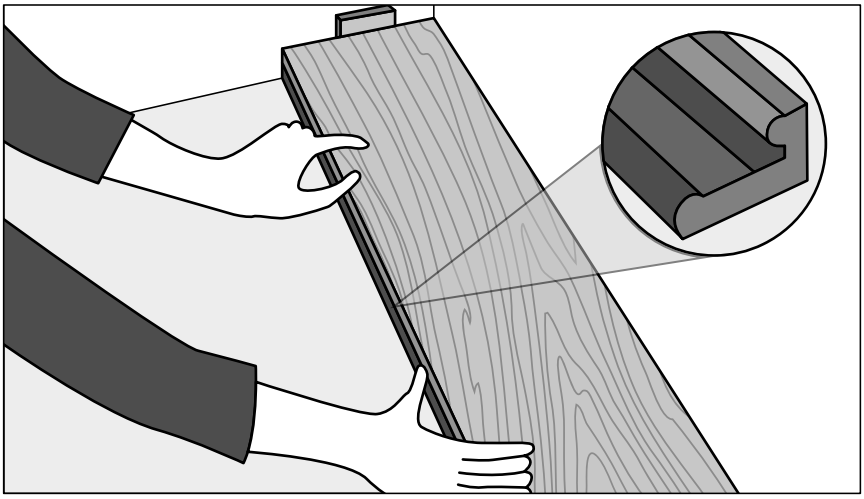

Step 4

Fold the plank down in a single movement. Make sure the planks are tight against each other. Press down the plank.

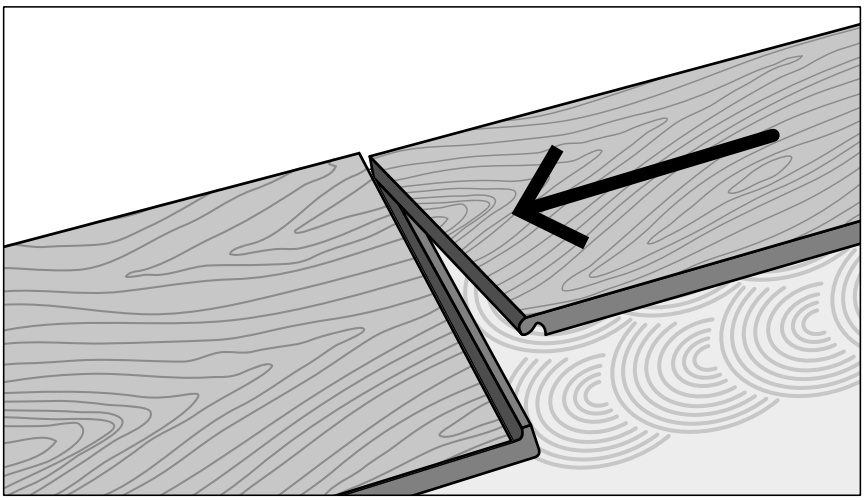

Step 5

At the end of the first row, put a wedge to the wall and measure the length needed for the last plank.

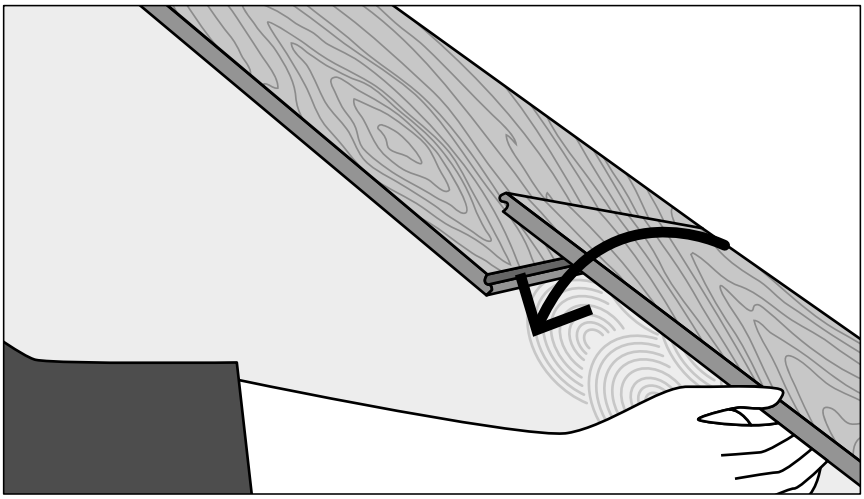

Step 6

Start the second row with the off-cut from the first row. Note that there must be at least 16” between the end seams of the planks.

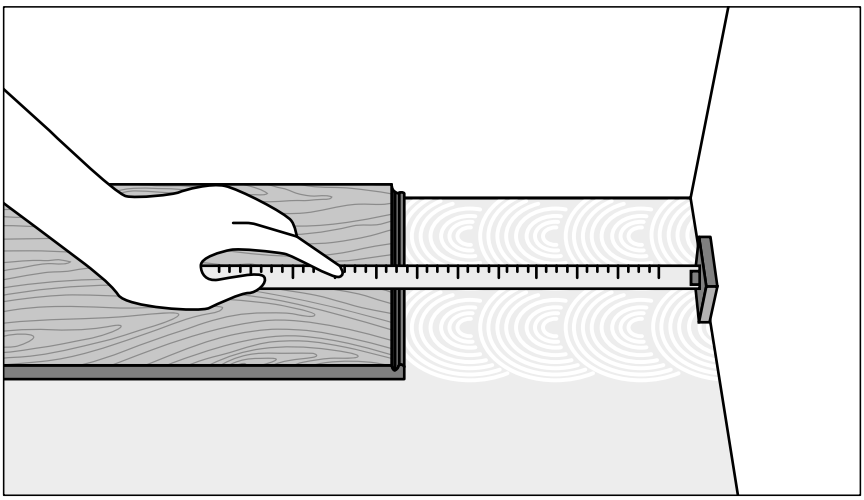

Step 7

Second plank, second row. Place the plank tightly against the short end of the previous plank. Fold the plank down in a single movement. Press down the plank.

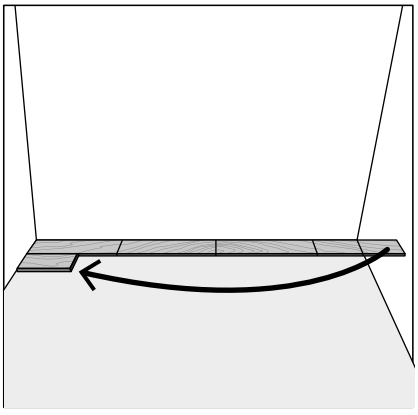

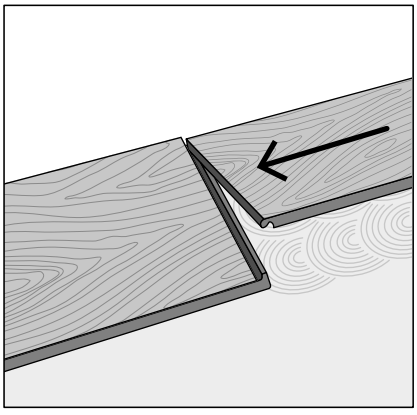

Note: After the first 2-3 rows have been installed, ensure your expansion space wedges are placed properly and securely. If recommended by the adhesive manufacturer, roll flooring with 100 lb roller to ensure contact between the planks and the subfloor. Place weight (e.g. unopened boxes) along the perimeter until the adhesive sets. Remove straight edge.

Step 8

Once starting rows are firmly in place, apply adhesive in a “wet lay” method. Do not apply more adhesive than can be used within the open time of the adhesive. Immediately place flooring in “wet” adhesive and proceed with installation.

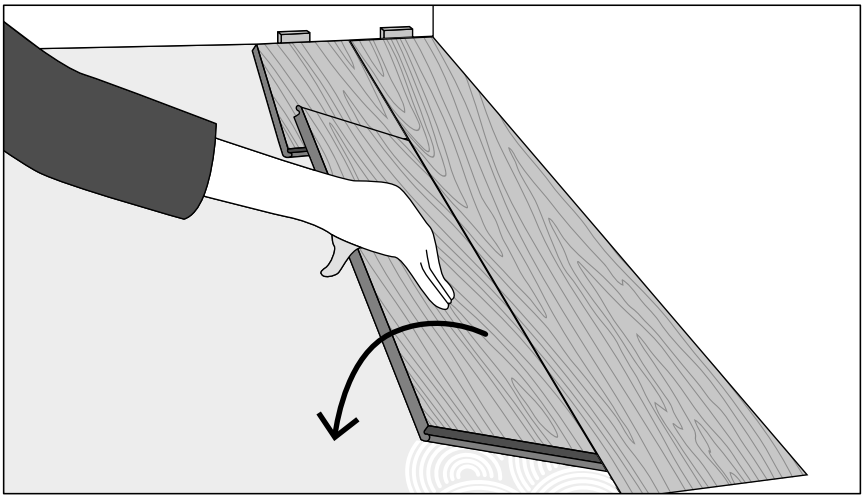

Tip!

Once the first 3 rows are laid, have one installer work on installing planks while the other spreads adhesive and cuts planks. Installation is easier while working on already installed planks. This also lessens the chance of accidentally transfering adhesive to the planks.

INSTALLING UNDER

Door Jambs

Using a scrap piece of flooring, undercut the door casing and baseboard to the correct height. Depending on the layout, you can then click the piece into place or glue into place the final piece by cutting off the click mechanisms of the final piece and it’s neighboring piece and gluing both pieces down.

Finishing the installation

Once you have laid the last plank, follow these steps to finish your installation.

• Remove spacers from the perimeter of the room.

• For glue down, keep foot traffic to an absolute minimum until adhesive is fully cured. Wait at least 24 hours before placing furniture back in room and resuming normal traffic.

• Install transition moldings. Do not fasten any moldings through the flooring. Pre-drill and install quarter round or baseboard molding. Molding must be sufficient size to cover the expansion space. Do not fasten moldings through the flooring. Fasten into the wall.

• In order to protect the floors while other trades are finishing their work, paper will often be taped down to the floor. If this is done, be sure to use 3M Scotch-Blue™ 2080 Tape when adhering the paper to the floor. Certain other tapes may damage the finish.

• Furniture should be moved onto the newly installed floor using an appliance hand truck over hardboard runways.

• Use felt-protectors on all furniture.

• Avoid placing rugs on the flooring for the first few months following installation to ensure an even color throughout.

Post-installation temperature must be maintained between 65°-85°F with a relative humidity (RH) of 40° to 60°. If plank contraction occurs due to climate change, give the flooring 4 weeks at the specified temperature, then inspect again.

INSTALLATIONS

Special



Bathrooms

Silvan is topically waterproof and may be installed in bathrooms. If installed correctly, the 5G Dry click mechanism will prevent standing water from penetrating the seams of the planks for as long as 24 hours, usually long enough to allow evaporation. Be sure to use caulking at the ends of the flooring, especially where the floor meets a bathtub, toilet, sink, or walls so that in the event of flooding the planks doesn't get fully drenched.



Stairs

Silvan can be installed on stairs using planks and stair nosings. It is recommended on stairs that the planks be glued, to prevent movement. Please refer to the molding installation instructions for more details.

FOR YOUR FLOORS

Maintenance

Proactive Protection for Your Floors

• Regularly sweep and vacuum your floors. Dust acts as an abrasive. Keeping your floors dust-free will prolong the life of your finish and wear-layer. Do not use vacuums that use a beater bar or turn the beater bar off.

• When moving appliances or heavy furniture, we recommend laying a Masonite panel on your floor for the best protection. Use felt protectors on furniture to reduce indentation. As a general rule of thumb, the heavier the item, the wider the floor protector needed. We recommend felt pads at least 1" in diameter.

• Be careful with rolling casters. They can damage the floor. If you choose to use them, look for the widest possible wheel you can find.

• Place a walk-off mat at outside entrances to reduce the amount of dirt brought into your home.

• Avoid exposure to direct sunlight for prolonged periods of time. During peak sunlight hours, use drapes or blinds to minimize the direct sunlight on the vinyl flooring. Most types of flooring will be affected by continuous strong sunlight. In addition, excessive temperatures are not good for resilient floors. Natural ventilation or intermittent air conditioning in vacant homes should be considered.

• Silvan is pre-lacquered and does not need any surface treatment after installation.

• Never sand your Silvan floors. That will damage the acrylic wear layer.

FOR YOUR FLOORS

Maintenance

• For daily cleaning, use mainly dry methods such as a dust mop or vacuum cleaner.

• You may use a hardwood floor refresher (such as the one made by Bona) ocassionally to freshen up the surface and remove micro scratches.

• Use cleaners made for UV acrylic wear layer hardwood floors. Normal soap may build up over time and dull the finish of your floors.

SILVAN

RESILIENT HARDWOOD COLLECTION

See Our Floors
in Your Space

FOR SUPPORT

1-800-700-8122
support@flooret.com
www.flooret.com