TOOLkiss®

Give powerful tools for a kiss

INSTALLATION GUIDE

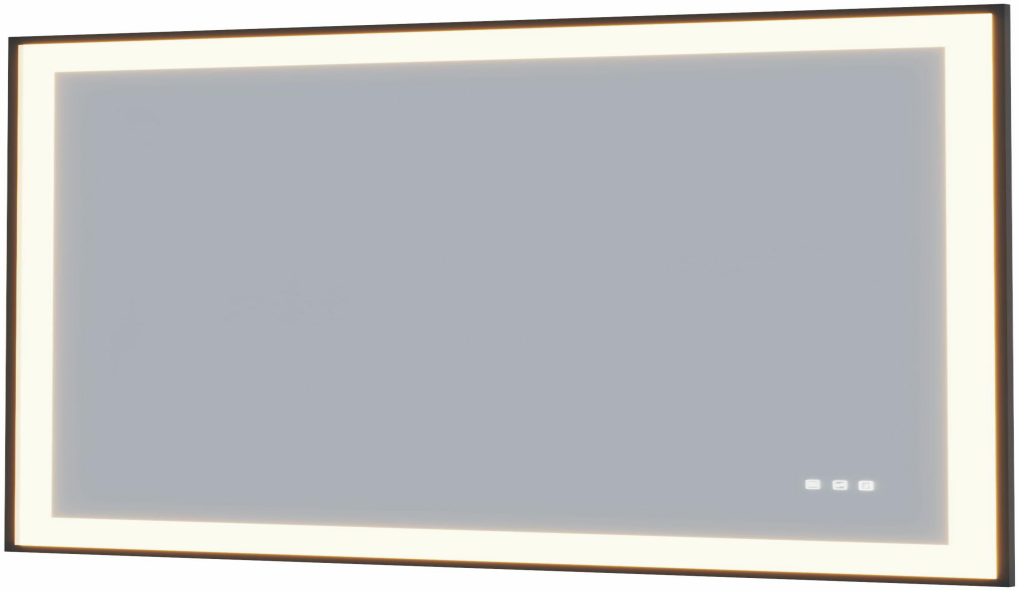

INTERTEK ETL CM LISTED

c UL® US LISTED E533661

Customer service:

For more information about TOOLKISS® products please visit WWW.TOOLKISS.COM

+1(832)3768443 sales@toolkiss.com

Do not return product to the store.Contact TOOLKISS® directly with any questions.

IMPORTANT SAFETY INSTRUCTIONS

When using an electrical furnishing, basic precautions should always be followed, including the following:

Read all instructions before using (this furnishing).

DANGER – To reduce the risk of electric shock:

1. Always unplug this furnishing from the electrical outlet before cleaning or servicing.

WARNING – To reduce the risk of burns, fire, electric shock, or injury to persons:

1. Unplug from outlet before putting on or taking off parts.

2. Close supervision is necessary when this furnishing is used by, or near children, invalids, or disabled persons.

3. Use this furnishing only for its intended use as described in these instructions. Do not use attachments not recommended by the manufacturer.

4. Never operate this furnishing if it has a damaged cord or plug, if it is not working properly, if it has been dropped or damaged, or dropped into water. Return the furnishing to a service center for examination and repair.

5. Keep the cord away from heated surfaces.

6. Never operate the furnishing with the air openings blocked. Keep the air openings free of lint, hair, and the like.

7. Never drop or insert any object into any opening.

8. Do not use outdoors.

9. Do not operate where aerosol (spray) products are being used or where oxygen is being administered.

10. To disconnect, turn all controls to the off position, then remove plug from outlet.

11. For grounded products the following st tement:

"WARNING: Risk of Electric Shock – Connect this furnishing to a properly grounded outlet only. See Grounding Instructions."This product is for use on a nominal 120-volt circuit and has a grounding plug that looks like the plug illustrated as below, Make sure that the product is connected to an outlet having the same configuration as the plug. No adapter should be used with this product.

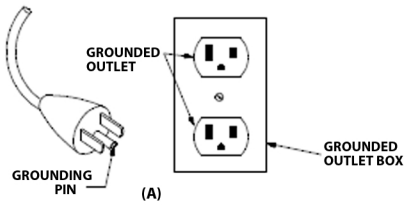

12. Mount furnishings at the correct height.

13. Mount only approved work surfaces and secondary surfaces (shelves) in accordance with instructions. Failure to do so may cause instability, collapse, or failure of electrical components. [Applicable to furnishings that are not provided with a work surface and/or secondary surfaces (shelves)].

SAVE THESE INSTRUCTIONS

“SUITABLE FOR DAMP LOCATIONS [CONVIENTAUX EMPLACEMENTS HUMIDES]

For Household / Residential Use Only [POUR L'USAGE MÉNAGER / RÉSIDENTIEL SEULEMENT]”

WARNING AND SAFETY INSTRUCTIONS

Before assembling your LED Lighted Mirror fixture, please make sure that you carefully read through this instruction sheet, refer back to them during installation to ensure your product is fitted safely and correctly. Keep these instructions for future use.

WARNING Risk of Fire and Electric Shock

- All fittings must be installed in accordance with current IEE wiring regulations. If in doubt, consult a qualified electrician.
- Switch off the electrical supply at the main circuit board BEFORE installation and maintenance.
- Suitable for indoor use only. This product should be positioned well away from curtains and fabrics. Never cover the mirror.
- Regularly check the cord, the transformer and all other parts for damage. If any part is damaged the product should not be used.

INSTALLATION SAFETY

- Inspect the product immediately upon receipt for the transit damage or missing parts. Handle the product with care and protect against knocks to all sides and edges of the glass.
- Ensure there are no hidden pipes or cables in the wall before drilling.
- Wear suitable eye protection when drilling. Take care if drilling on tiled surfaces in case the drill slips.

⚠ CAUTION

The light source of this product is non-changeable light diodes (LED). Do not disassemble the product, as the light diodes can cause damage to the eyes.

NOTE: The important safeguards and instructions that appear in this manual are not meant to cover all possible conditions and situations that may occur. It must be understood that common sense, caution and care, are factors that can't be built into any product. These factors must be supplied by the person(s) caring for and operating the fixture. Do not install this fixture in hazardous locations.

INSTALLATION INSTRUCTIONS

1 Measure the distance between the bottom of the mirror and point **a**.

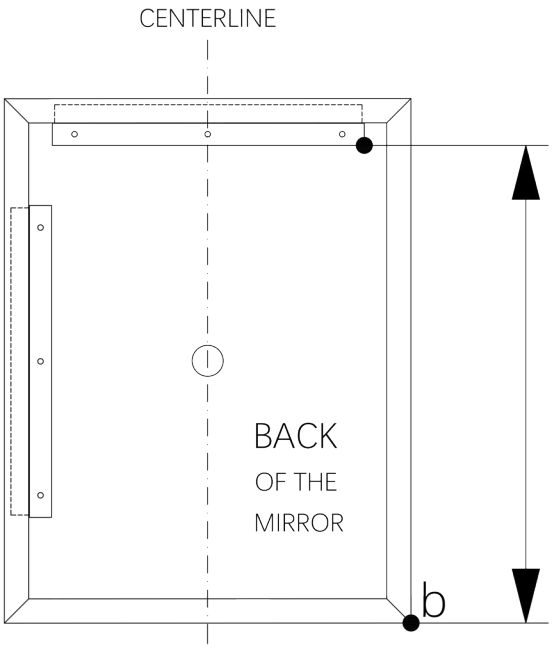

WARNING:
Mounting bracket must be attached to furring strip/channel

All can be mounted in both directions.
Only for concrete wall.

***HORIZONTAL & VERTICAL MOUNT OPTION AVAILABLE.**

2 Draw a horizontal line from the point **a** using a level.

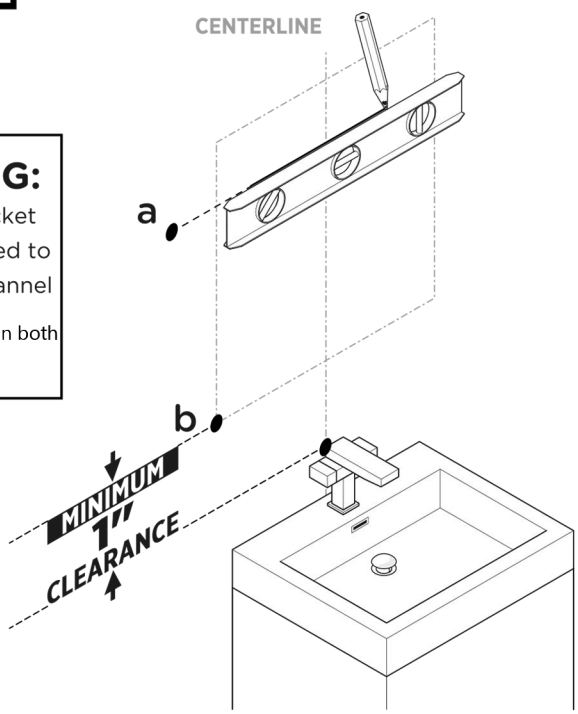

3 Attach the mounting bracket to the wall.

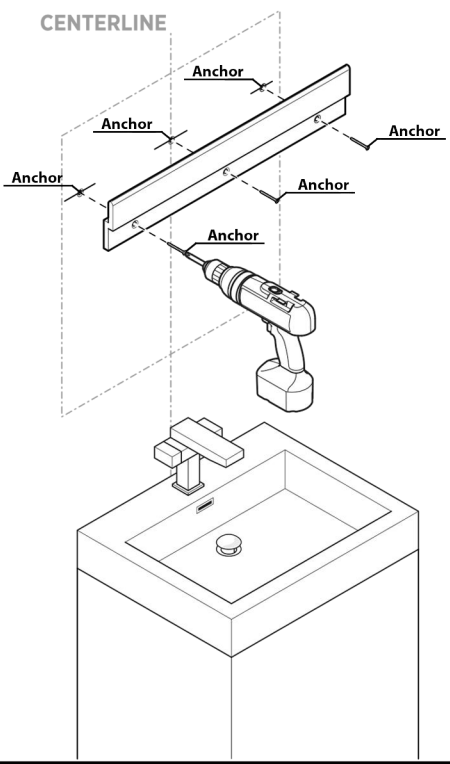

4 Hang the mirror on the mounting bracket.

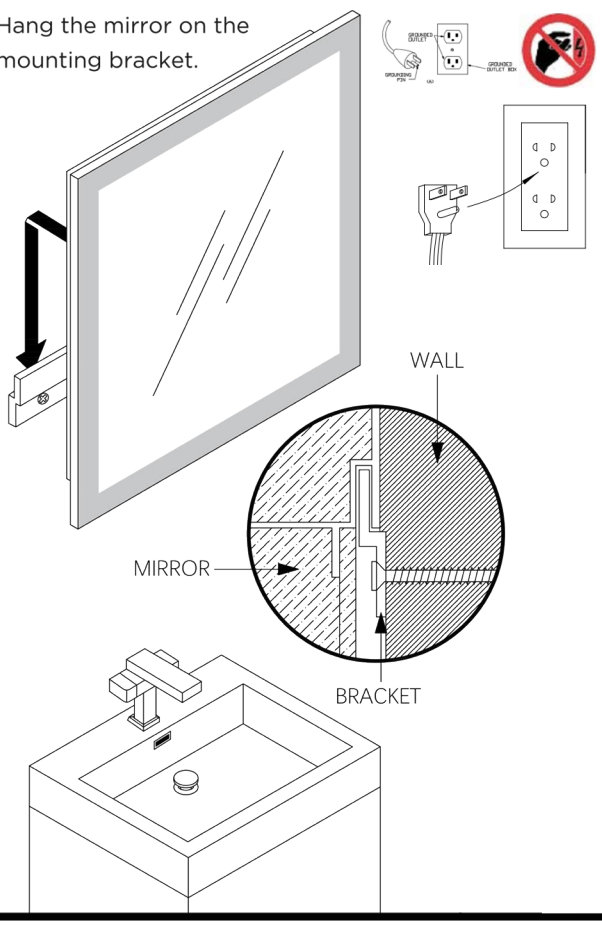

CHECK PRODUCT LIST AFTER OPENING THE PACKAGE

- LED Lighted Mirror --1 pce
- Screws for wall --3 pcs
- Type Plastic Anchor --3 pcs
- Mounting bar --1 pce
- Installation Manual --1 pce
- Screw Size ST5x45mm
- Expansion rubber plug size 7.7x38mm

note: Anchors should be selected by installer according to the product weight if anchors are provided are not suitable for the field use.

TOOLS YOU MAY NEED

HOW TO USE?

POWER
ON/OFF (<1S)

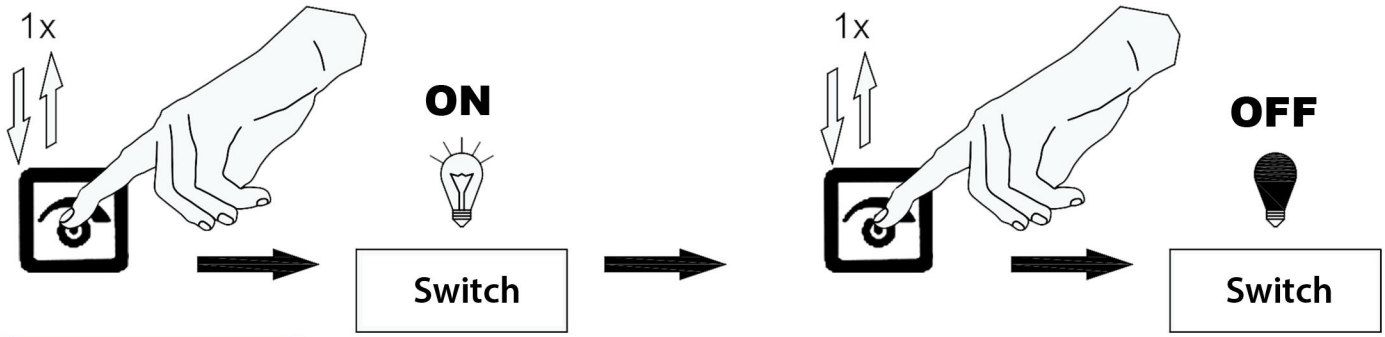

ANTI-FOG
ON/OFF (<1S)

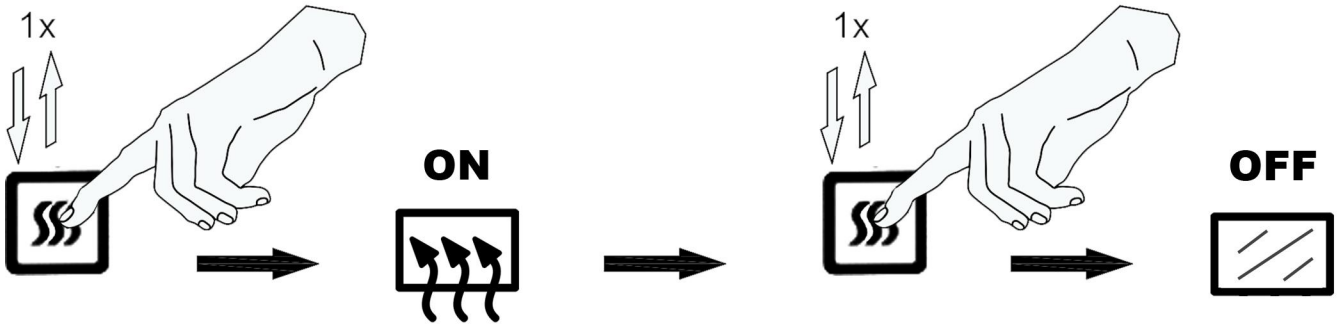

COLOR TEMPERATURE ADJUSTABLE

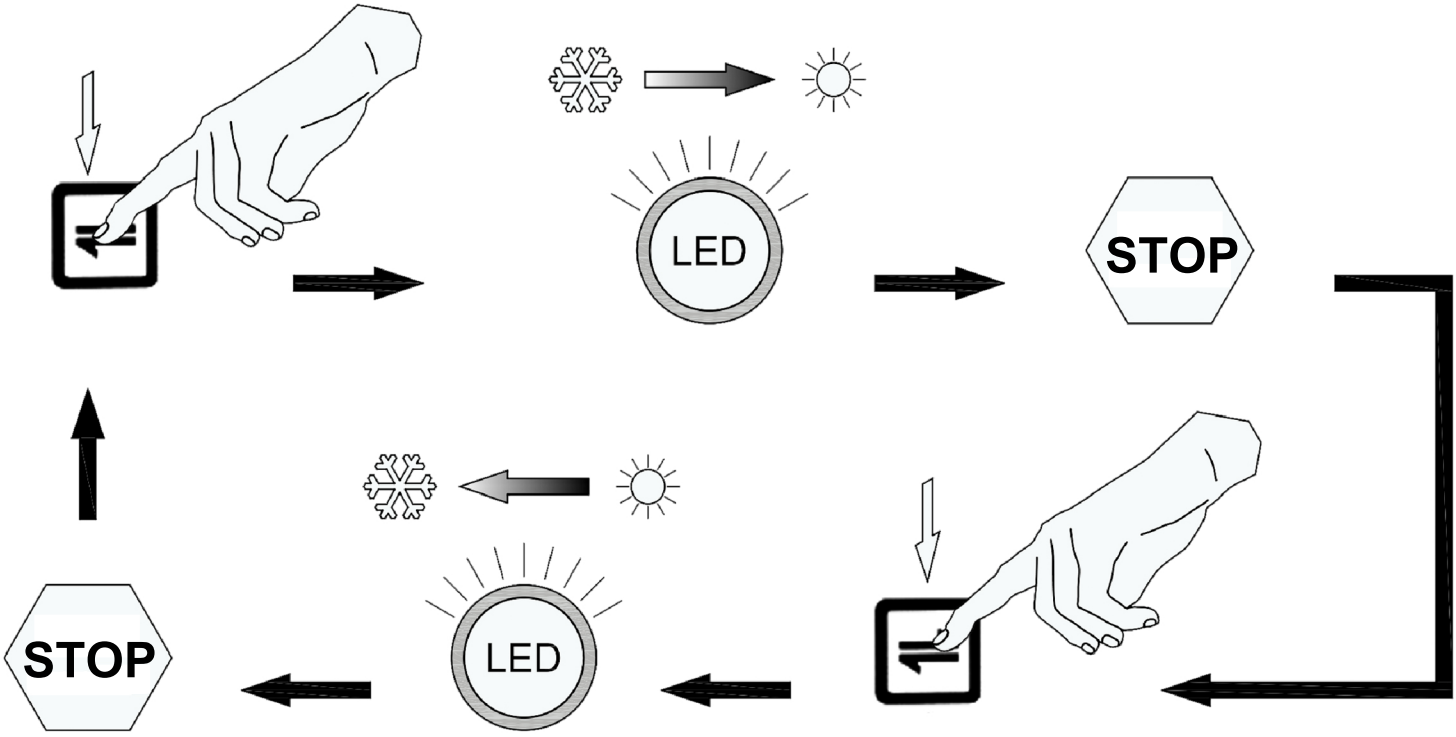
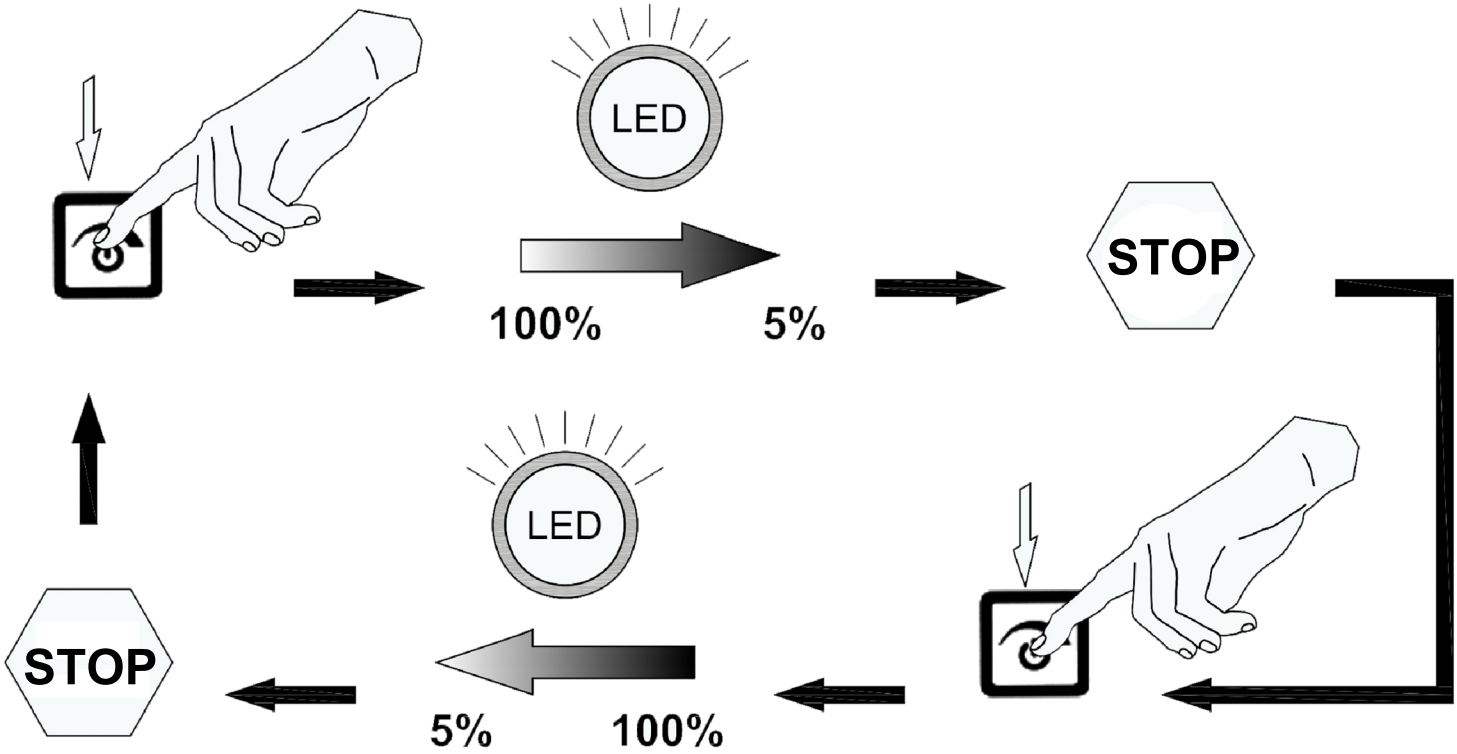
DIMMABLE (Long touch>3S)