PIAZZA UPIA-100-PC

Single Handle Sink Faucet

Spare Parts Sheet
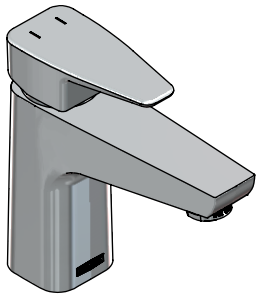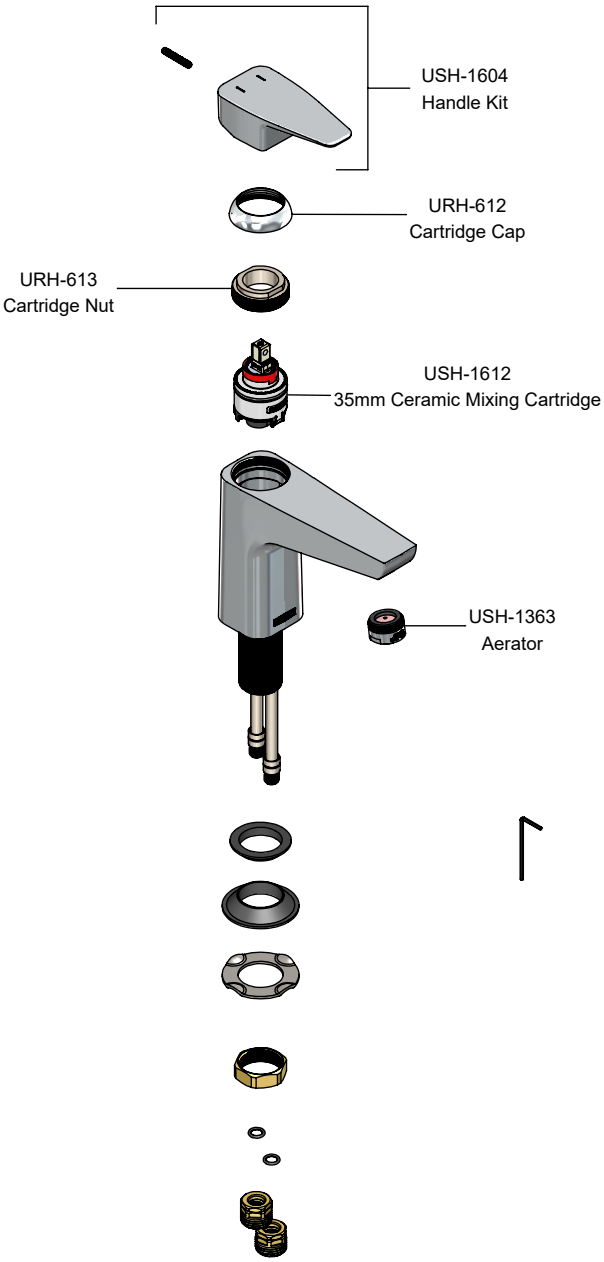
Kit of spare parts for preventive maintenance.