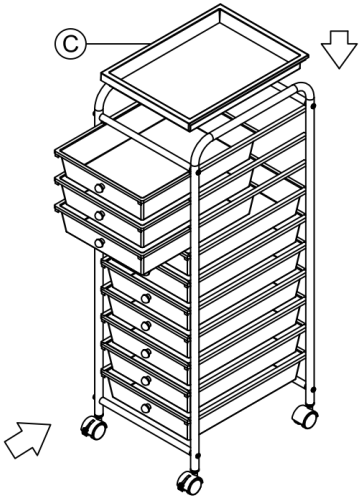

STEP 4. Insert Drawers

Slide the drawers into the channels and clip the **TRAY (C)** onto the crossbars.

Congratulations!

Enjoy your new organizer cart!

FAQs

Q. How big is it?

A. Unit measures 12.8" W x 15.35" D x 38.19" H

Q. Can I use it without the casters?

A. No, the cart is not designed to be used without the casters.

Q. How much weight can it hold?

A. Weight capacity per drawer: 3.3 lbs. (1.5 kgs)

Weight capacity on top shelf: 16.5 lbs. (7.5 kgs)

Total weight capacity: 49.5 lbs. (22.5 kgs)

Customer Service Information

Telephone: (800) 323-5565

Fax: (310) 533-3899

Hours: 8:30 AM – 4:30 PM (PST)

Email: Support@SevilleClassics.com

Homepage: www.SevilleClassics.com

seville classics®

10-Drawer Organizer Cart with Tray

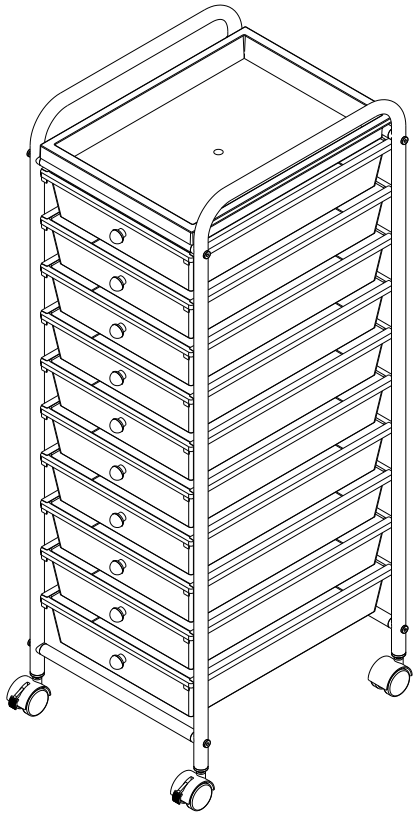

Model #: WEB241, WEB481

Thank you for choosing Seville Classics! We hope that you enjoy your organizer cart. Please read through this user guide for parts list, assembly instructions, frequently asked questions and contact info.

Parts List

A. Side frame (2)

B. Crossbar (4)

C. Tray (1)

D. Drawer (10)

E. Sleeve (4)

F. Caster (2)

G. Locking caster (2)

H. Bolt (8)

I. Washer (8)

J. Screw (10)

K. Drawer Pull Knob (10)

L. Allen Wrench

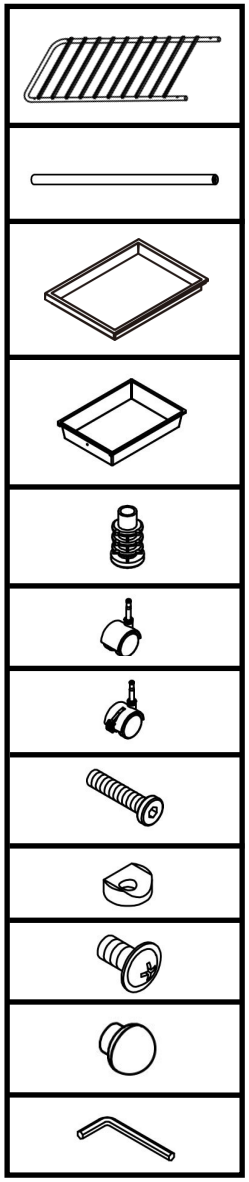

Please make sure you have all the parts on this list.

If you're missing parts, contact us for replacements at (800) 323-5565 or send an email to Support@SevilleClassics.com

Assembly Instructions

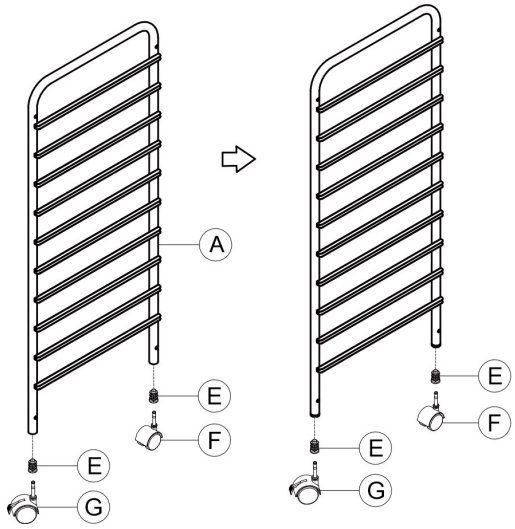

STEP 1. Attach Casters

Make sure channels on each **SIDE FRAME (A)** face each other.

Push the **SLEEVES (E)** into the bottom poles of **SIDE FRAME (A)**.

Push **CASTERS (F)** and **LOCKING CASTERS (G)** into the **SLEEVES (E)**.

Repeat for other **SIDE FRAME (A)**.

STEP 2. Attach Crossbars

Fit a **WASHER (I)** between **SIDE FRAME (A)** and **CROSSBAR (B)**.

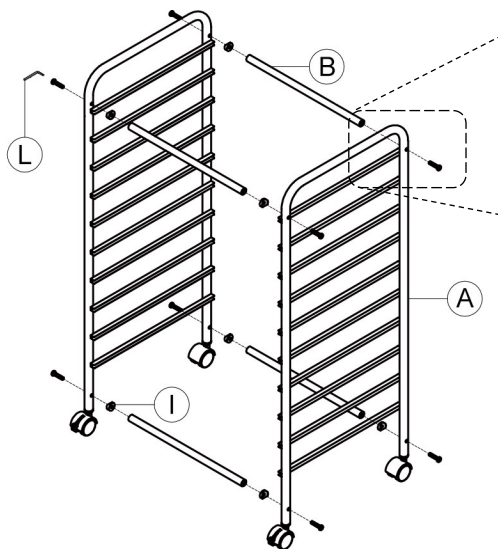

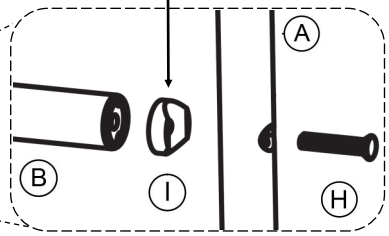

Flat side of washer MUST sit in end crossbar. Curved side of washer MUST fit against side frame.

Screw **BOLT (H)** through outer bolt holes on a **SIDE FRAME (A)** and into **CROSSBAR (B)**.

Tighten bolts with **Allen Wrench (L)** until snug.

Repeat for remaining bolt holes.

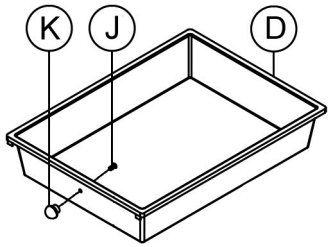

STEP 3. Assemble Drawers

Attach **DRAWER PULL KNOBS (K)** to all **DRAWERS (D)** with **SCREWS (J)** and screwdriver.