GAMA SONIC®

SOLAR LIGHTING

Instruction Manual

Royal Bulb Solar Lamp

Part #: 98B001, 98B101, 98B301, 98B102, 98B302, 98B303

US Patent #7172307, 9458970

Version 1.1

Please read the instruction manual carefully to obtain the best results from your purchase.

Thank you for your purchase! GAMA SONIC® solar charged lights are brighter and last all night with a typical solar charge. Unique design, superior light output and numerous installation options confirm the outstanding value of our product. GAMA SONIC® has been recognized as a worldwide leader in the lighting industry for over 20 years.

Technical Assistance/Warranty Claims/Replacement Parts
Toll Free Number: +1-800-835-4113 (only within the US) or www.gamasonic.com

Visit our website or download the latest version of your instruction manual:
www.gamasonic.com or www.gamasonic.com/user-guides

Gama Sonic's Bulb Technology

Gama Sonic's patented Bulb technology gives your solar lamp the look and feel of a traditional incandescent lamp. This helps to distribute light further than traditional solar lamps.

Solar Lamp Location

For optimum light duration throughout the night, it is very important to mount your solar lamp in a spot where it will receive the maximum amount of direct sunlight throughout the day.

For best results, the solar light must be charged in the "ON" position (High or Low) for at least 2 days of full direct sunlight.

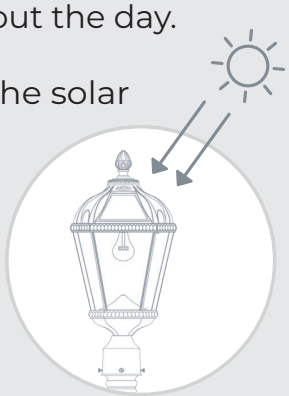

What's in the Box

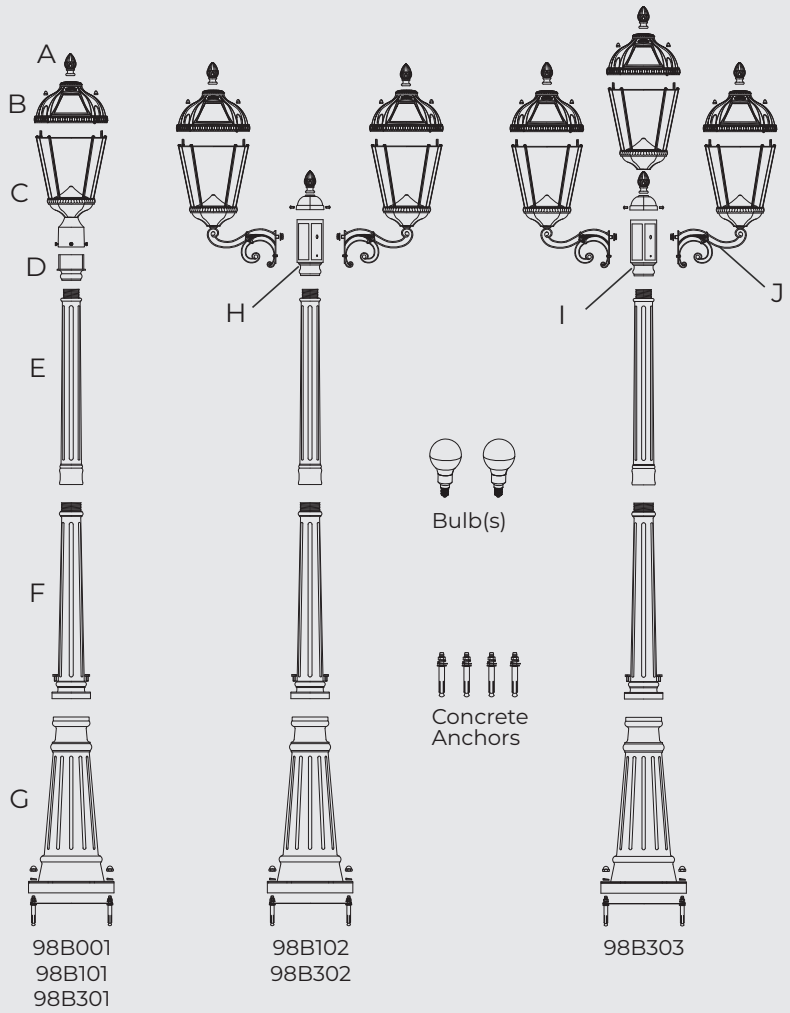

Assembly Instructions

98B001/98B101/98B301

1. Using the provided template, mark and drill three holes into concrete no larger than the provided anchors.

   NOTE: For installation in the ground where pouring concrete is not preferred or possible, use our EZ Lamp Post Anchor, model 30001 (sold separately) to quickly and easily secure the lamp anywhere in your yard. This is only to be used with models 98B001, 98B101, or 98B301.

2. Place the anchors into the holes with the threaded ends facing up.
3. Place the Base Pole (G) over the anchors and secure using a wrench. Cover the nuts with the provided plastic covers.
4. Place the middle pole (F) on top of the base pole (G) and secure with the provided screws.
5. Attach the top pole (E) to the middle pole (F) by twisting clockwise.
6. Attach the fitter adapter (D) to the top pole (E) by twisting clockwise.

   NOTE: the fitter adapter (D) may be installed in the fixture (C) in the box.

7. Attach the fixture (C) to the fitter adapter (D) and secure with the three set screws.

   NOTE: Be sure to not overtighten the set screws.

98B102/98B302/98B303

1. Using the provided template, mark and drill three holes into concrete no larger than the provided anchors.
2. Place the anchors into the holes with the threaded ends facing up.
3. Place the Base Pole (G) over the anchors and secure using a wrench. Cover the nuts with the provided plastic covers.
4. Place the middle pole (F) on top of the base pole (G) and secure with the provided screws.
5. Attach the top pole (E) to the middle pole (F) by twisting clockwise.
6. Remove the cap to the centerpiece (H/I) by removing the three small screws.
7. Insert the fixture with arm (J) into the centerpiece (H/I) and secure the threaded rod from the inside using the nut.
8. On the outside secure the fixture with arm (J) using the provided screw.
9. Repeat these steps to secure the second and/or third fixture with arm to the centerpiece (H/I).
10. Place the cap back on the centerpiece (H/I) and secure with the three screws.
11. With the help of another person, place the assembly of lamp heads and centerpiece (H/I) on the top pole (E) and twist clockwise until fully attached to the pole.

Operation Instructions
(follow these instructions for each lamp head)

1. Remove the two screw caps from the top (B).
2. Install the GS Solar LED Bulb into the lamp by holding it at the base and turning clockwise.
3. Turn the operation switch to your desired setting:

   Low = Softer light output and longer duration

   High = Brighter light output

4. Place the top (B) back on the fixture and secure with the two screw caps.
5. Install the finial (A) into the top (B) by twisting clockwise.

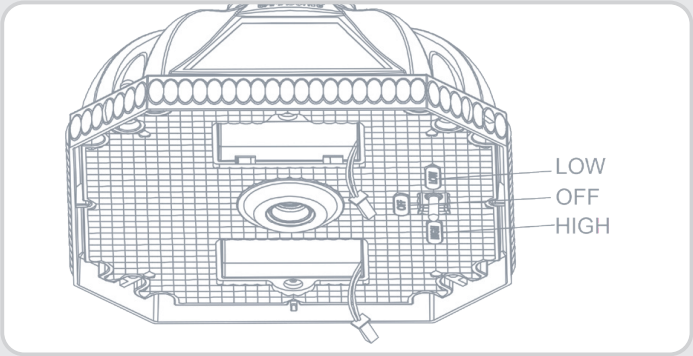

Replacement Parts

Replacement Batteries and Bulbs are available at www.gamasonic.com or via our Toll Free number: +1-800-835-4113.

Your Lamp can use the following bulbs:

A50WW10W – included bulb with Warm White LEDs (2700K)

A50BW10W – bulb with Bright White LEDs (6000K)

F30WW05W – Flame bulb with simulated flame LEDs

T45WW10W – Edison LED Bulb with Warm White LEDs (2700k)

Your Lamp uses two of the following battery:

GS32V30

Replacing the Batteries
(each lamp head has its own set of batteries)

GAMA SONIC®
SOLAR LIGHTING

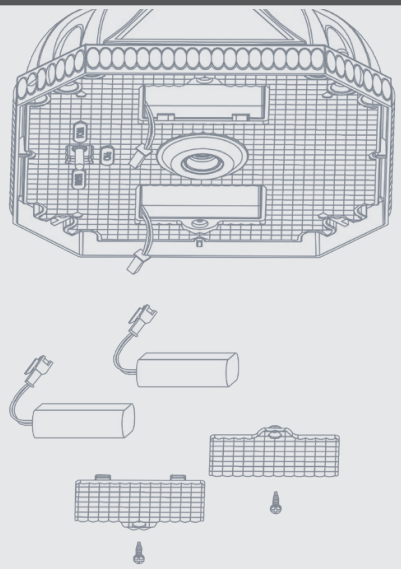

After several years of use, the batteries may need replacing.

1. Remove the top (B) by unscrewing the two screwcaps.
2. Switch the unit OFF and remove the bulb.
3. Remove the screw and battery compartment cover.
4. Unclip and remove the battery.
5. Replace with a high quality Li-Ion 3.2V/3000mAh battery with matching connector (Item GS32V30).
6. Install the battery in the compartment and secure the cover with the screw.
7. Repeat steps 3-6 for the second battery compartment.
8. Install the bulb and switch the unit ON to your desired setting.
9. Place the top (B) back on the fixture and secure with the two screw caps.

Replacement Batteries and Bulbs are available at
www.gamasonic.com

Maintenance

Clean the solar panels regularly with a damp towel to guarantee optimum performance. Do not use any type of solvent for cleaning and be careful not to put too much pressure on the solar panels while cleaning.

Troubleshooting

If your solar light does not come on as expected despite observance of all the instructions, please try the following steps:

1. Make sure that the solar lamp is not being affected by any other light source.
2. Ensure the solar lamp is not positioned in the shade during the day.
3. Check that the batteries are installed correctly.

NOTE: The performance of the solar lamp will vary with the time of year. It will last longer when it has had a full day in the sun rather than a day in overcast weather.

WINTERTIME TIPS: For optimal performance, be sure to remove any snow or debris accumulation from solar panel(s). A solar panel free of debris will charge the batteries much more efficiently.

WARNING: Please keep out of reach of children. Do not dispose of the Li-Ion battery in the regular trash, municipal waste stream or by fire as batteries may leak or explode. Do not open, short circuit, or mutilate batteries as injury may occur. Preserve our environment by recycling Li-Ion batteries or disposing of them in accordance with local, State and federal regulations. Do not mix old and new batteries.