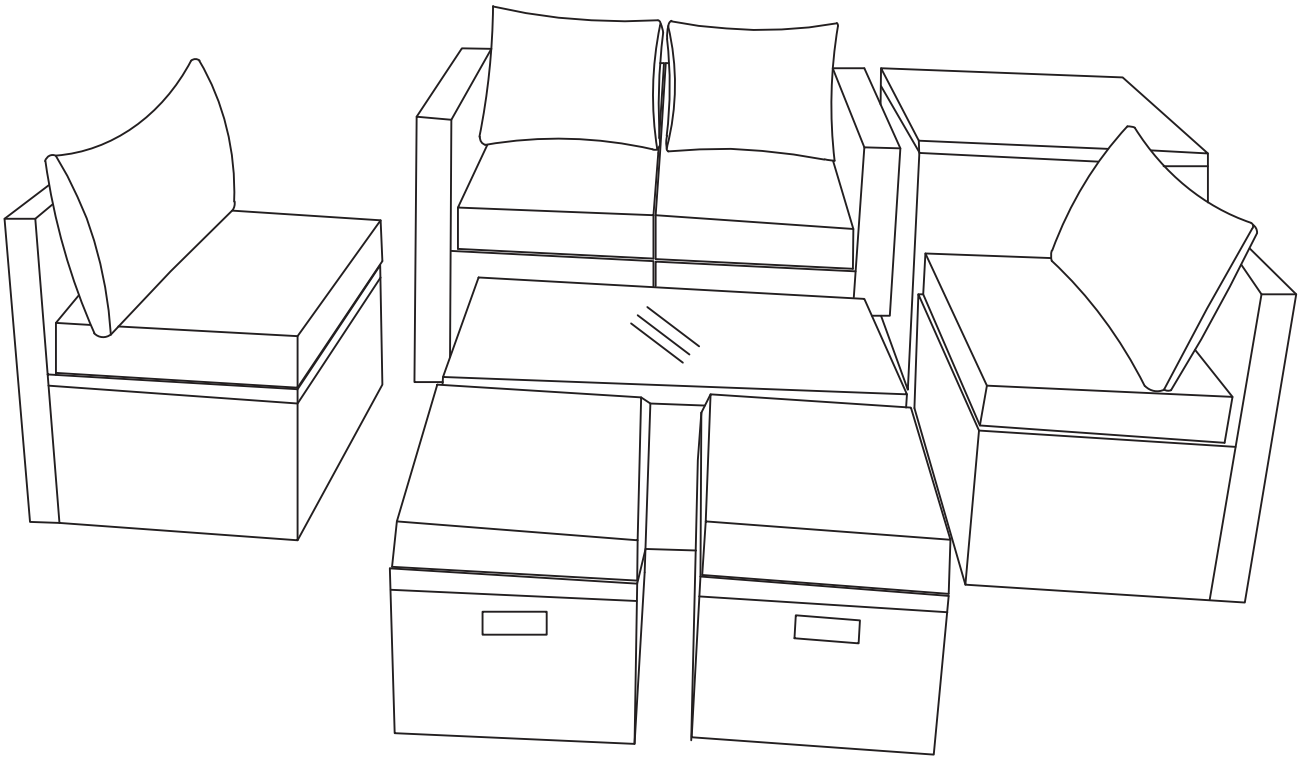

USER'S MANUAL

8 PIECE RATTAN SOFA SET
HW68604

THIS INSTRUCTION BOOKLET CONTAINS **IMPORTANT** SAFETY INFORMATION. PLEASE READ AND KEEP FOR FUTURE REFERENCE.

Before You Start

⚠ Read each step carefully before starting. It is very important to ensure each step followed in correct order, otherwise assembly difficulties may occur.

⚠ Most of board parts are labeled or stamped on the raw edges. Have a check to make sure all parts are included.

⚠ Work in a spacious area, preferably on a carpet close to where the unit will be used.

⚠ Keep the handtools close at hand. Do not use power tools to assemble your furniture. They may scratch or damage the parts.

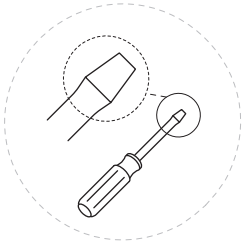
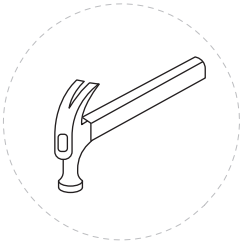
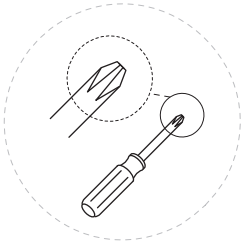
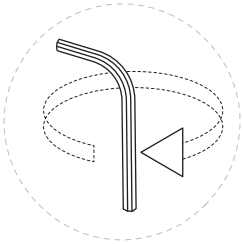

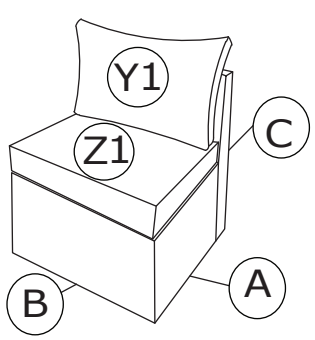

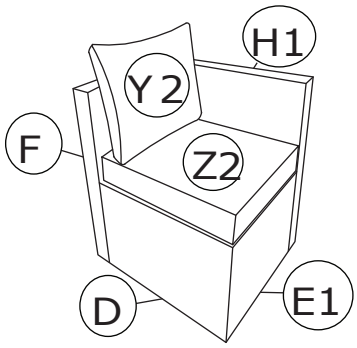

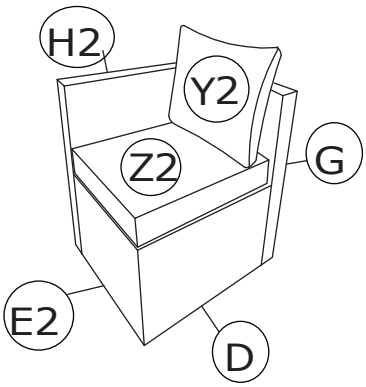

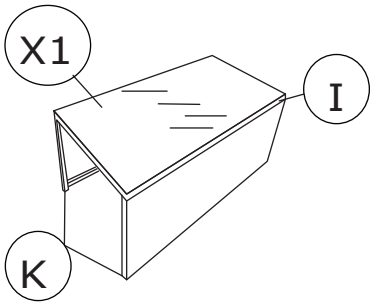

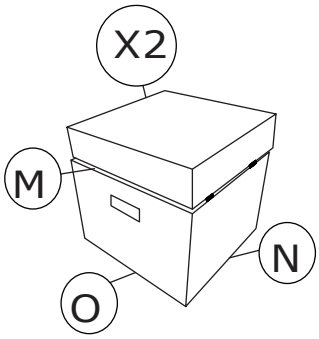

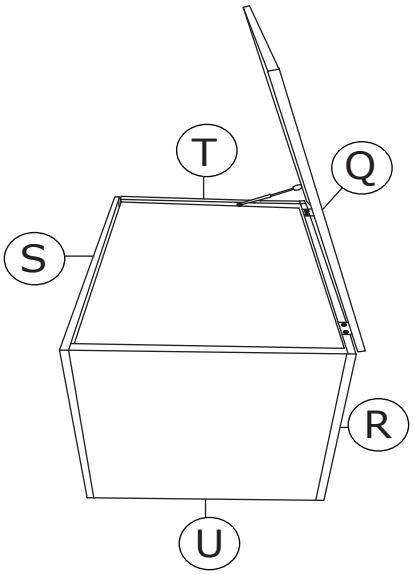

Notice

- 50% Tighten before fixing all screws, Allen wrench is recommended instead of an electric drill.
- Place the item on a flat ground to adjust and make sure it remains stable.
- Tighten up all screws with tools gradually.
- If the screws are not aligned with holes during assembly, please loosen all the other screws to 50% and continue the assembly process.
- If the item is not stable, please loosen all the screws, adjust it on a flat ground and tighten up all screws again.
- Note: If one or some screws are fully tightened during assembly, chances are the others will not be aligned with holes. In addition, all the holes are designed to be relatively larger to provide more space for the adjustment of the screws.

Part List

A 4 pcs

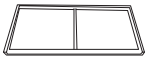

B 2 pcs

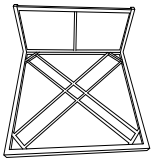

C 2 pcs

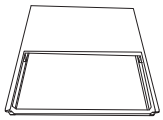

D 2 pcs

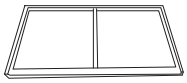

E1 1 pc

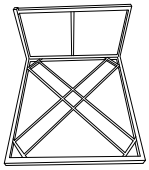

E2 1 pc

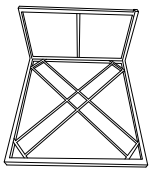

F 1 pc

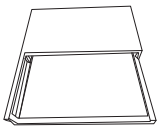

G 1 pc

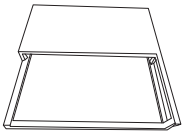

H1 1 pc

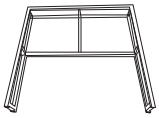

H2 1 pc



I 1 pc

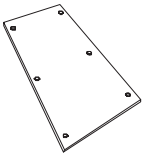

K 2 pcs

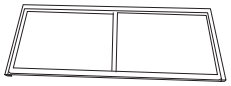

L 1 pc

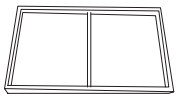

M 2 pcs

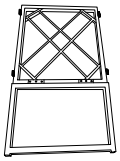

N 4 pcs

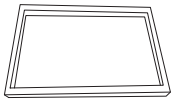

O 2 pcs

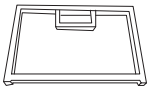

P 2 pcs

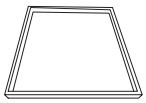

Q 1 pc



R 1 pc

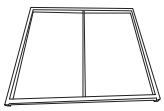

S 1 pc

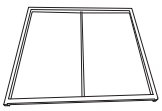

T 1 pc

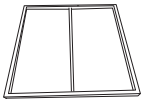

U 1 pc

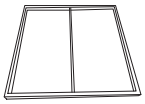

V 1 pc

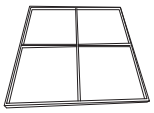

X1 1 pc

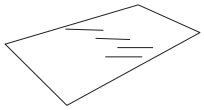

X2 2 pcs

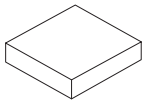

Y1 2 pcs

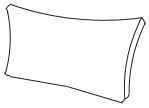

Y2 2 pcs

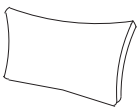

Z1 2 pcs

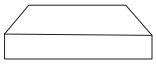

Z2 2 pcs

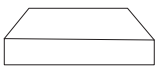

W1 1 pc



W2 1 pc



Hardware List

	Description	Hardware	Spec	Qty
1	Bolt		M6 x 60 mm	14 pcs
2	Bolt		M6 x 45mm	8 pcs
3	Bolt		M6 x 35 mm	15 pcs
4	Bolt		M6 x 30 mm	46 pcs
5	Bolt	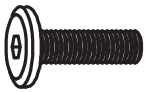	M6 x 25 mm	4 pcs
6	Bolt		M6 x 15 mm	4 pcs
7	Plastic washers		M6 x 8 mm	1 pc
8	Steel washers		M6	109 pcs
9	Nut		M6	22 pcs
10	Wrench	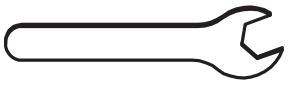	M 10	2 pcs
11	Allen key		M4	2 pcs

STEP 1

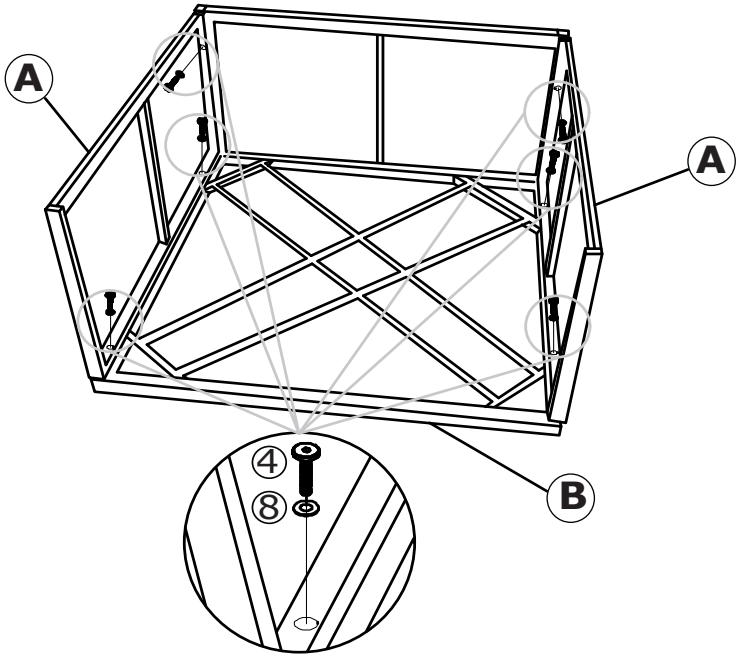

x2

STEP 2

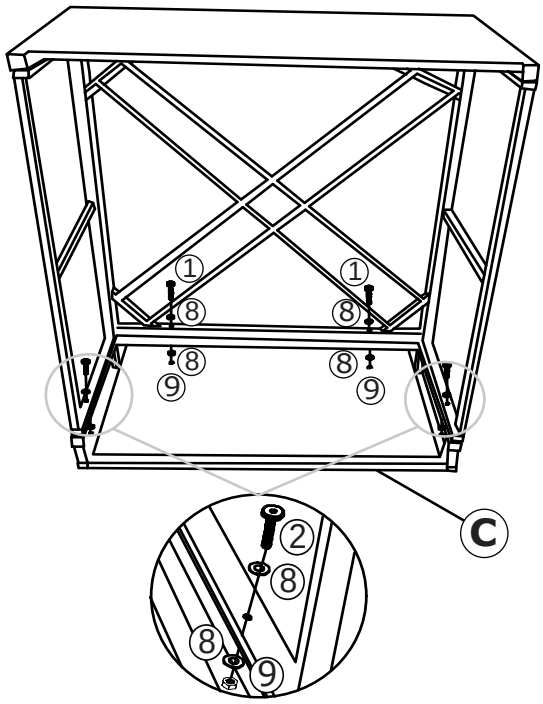

x2

STEP 3

x2

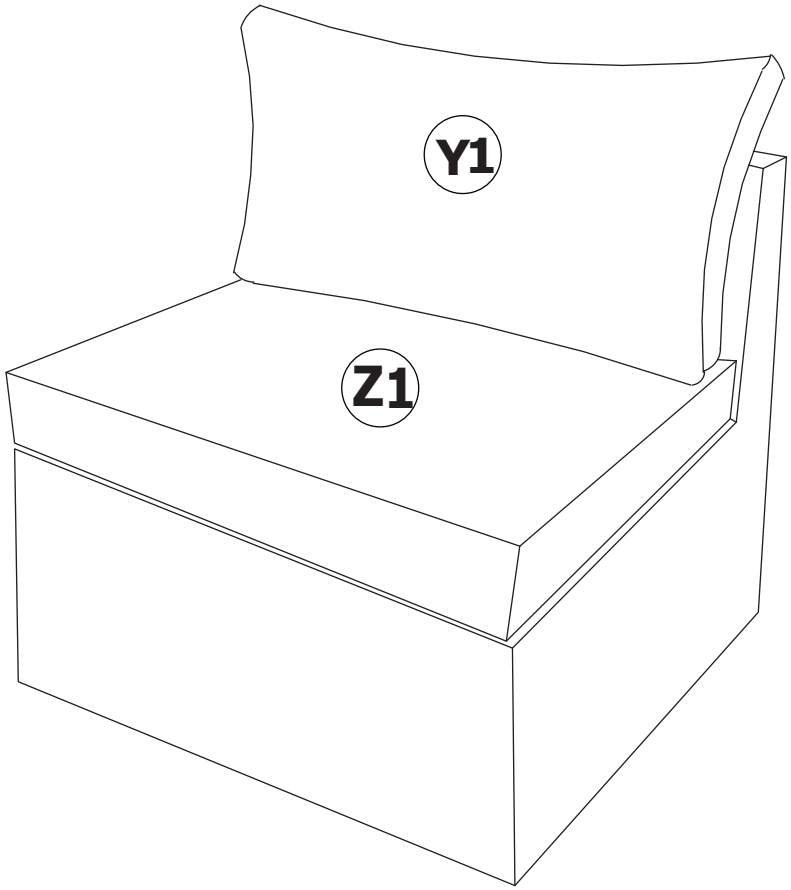

Finished

STEP 4

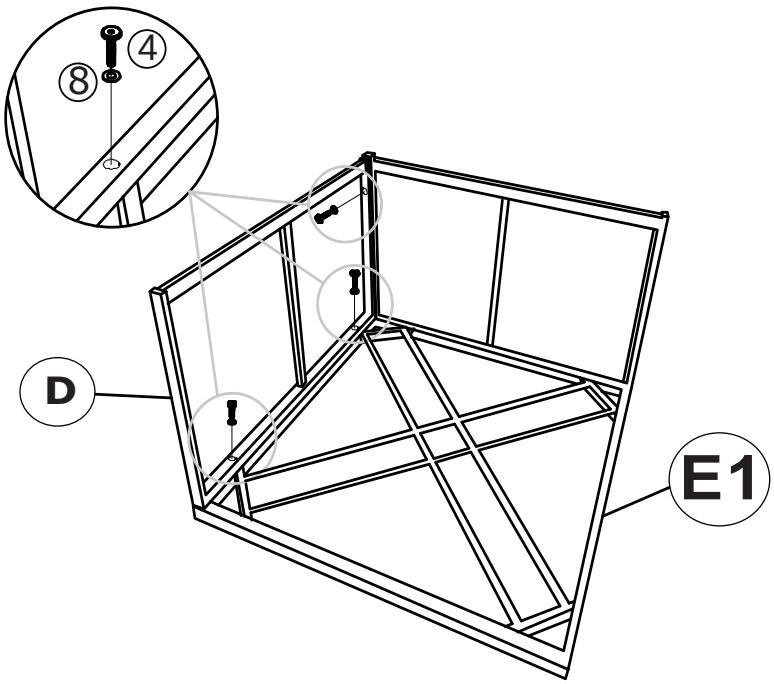

STEP 5

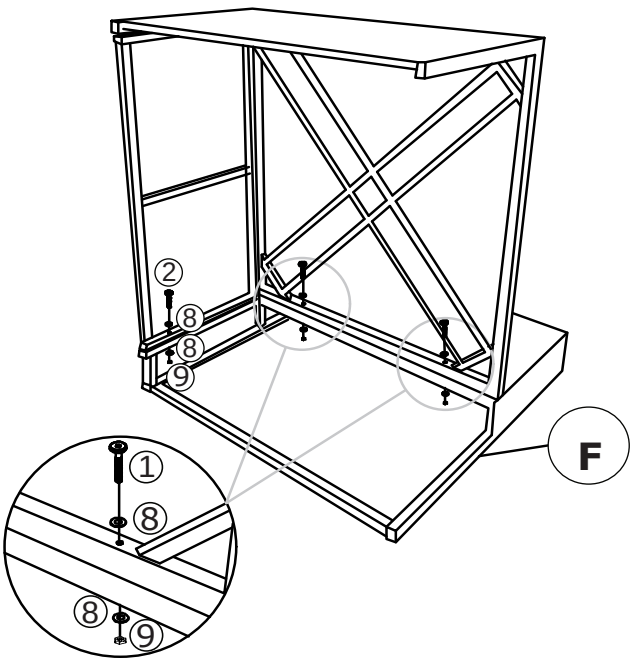

STEP 6

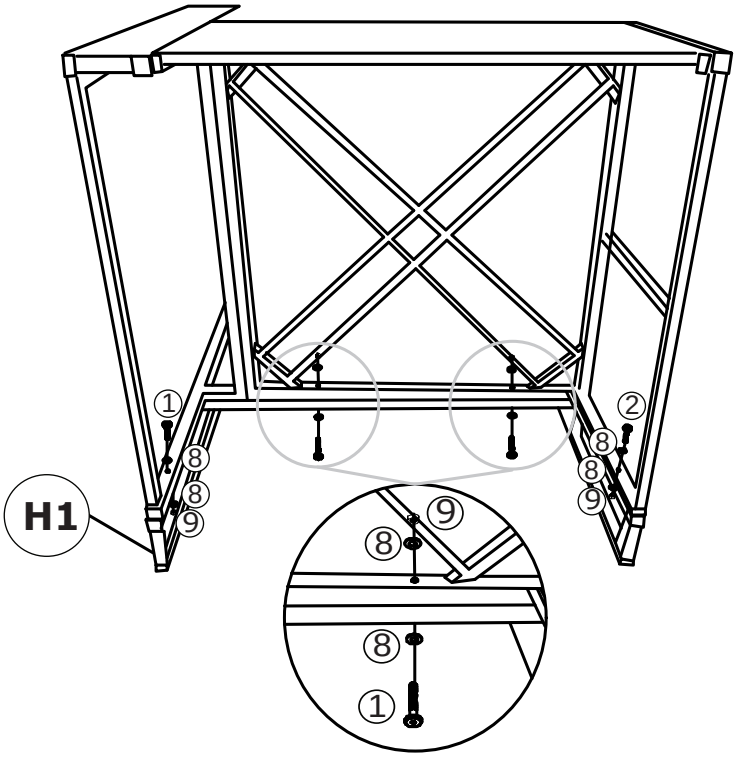

STEP 7

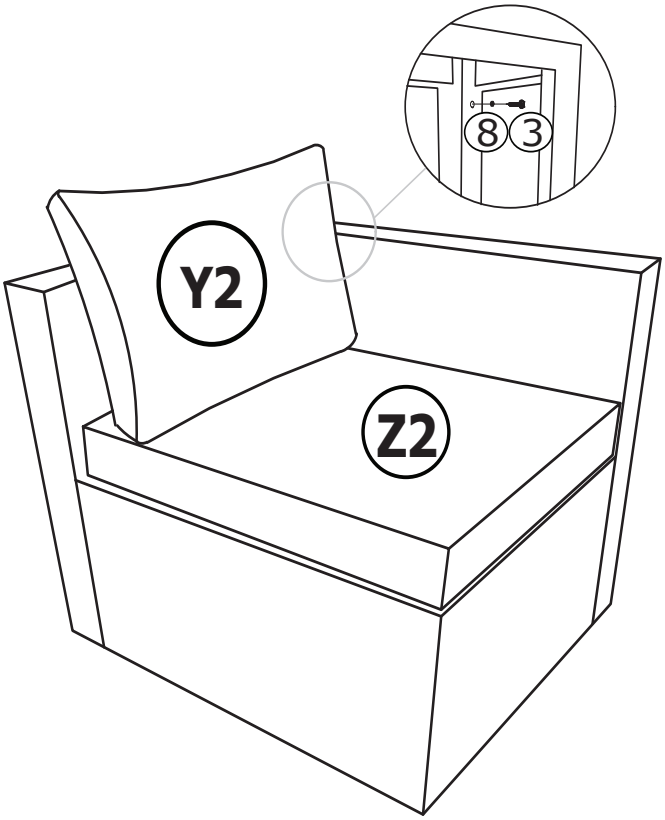

Finished

STEP 8

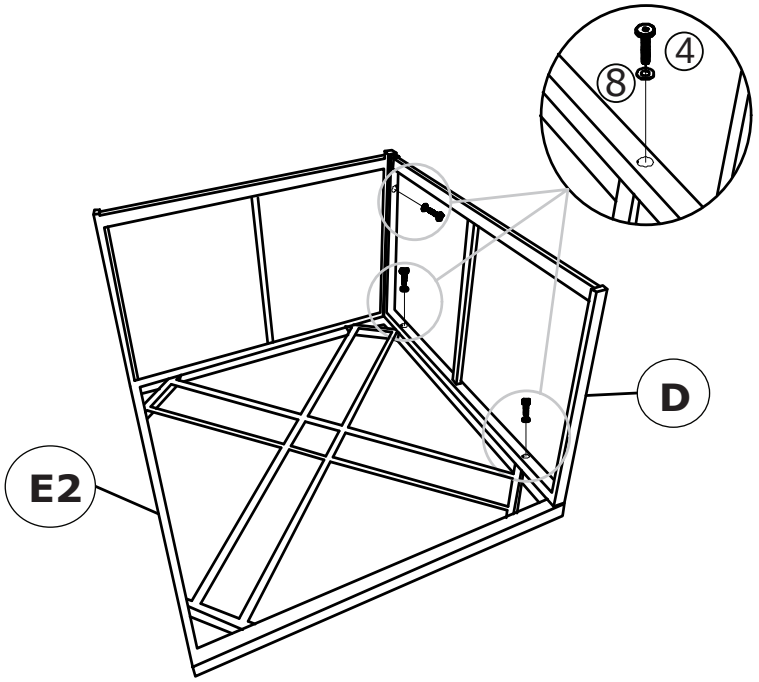

STEP 9

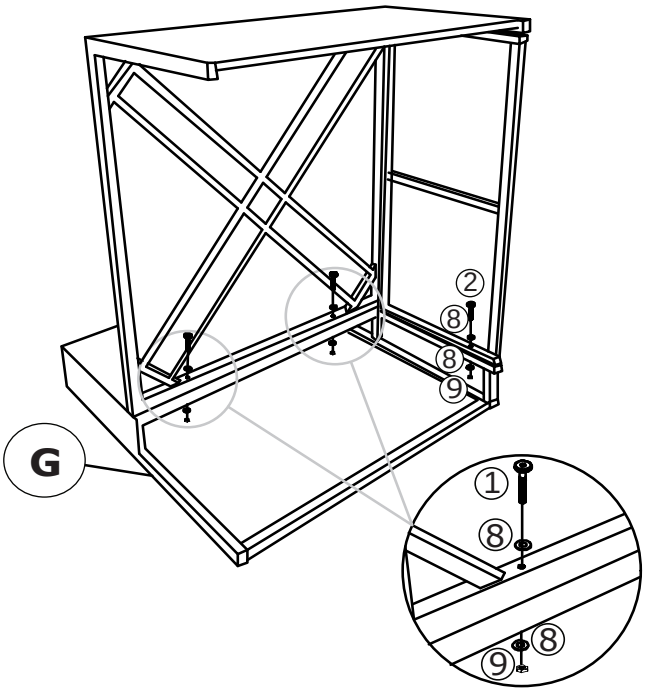

STEP 10

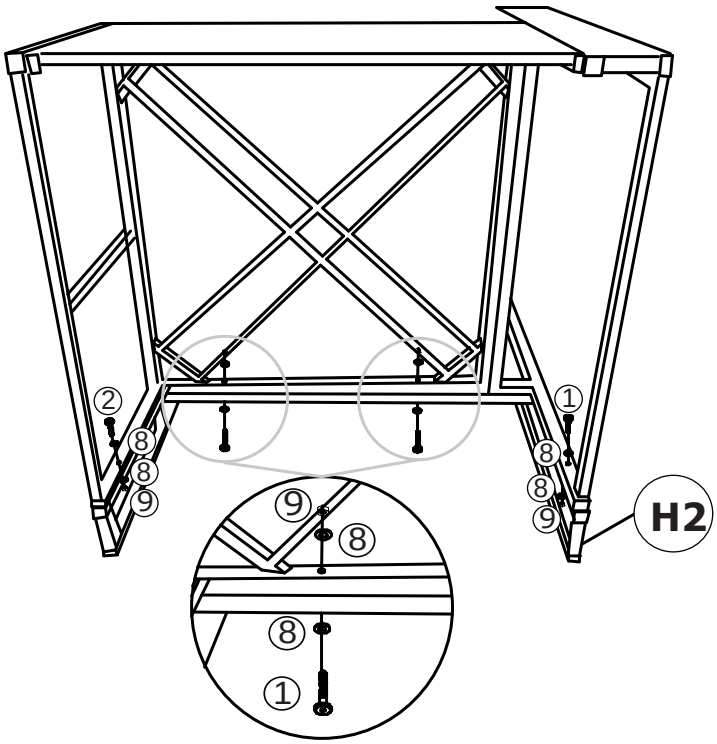

STEP 11

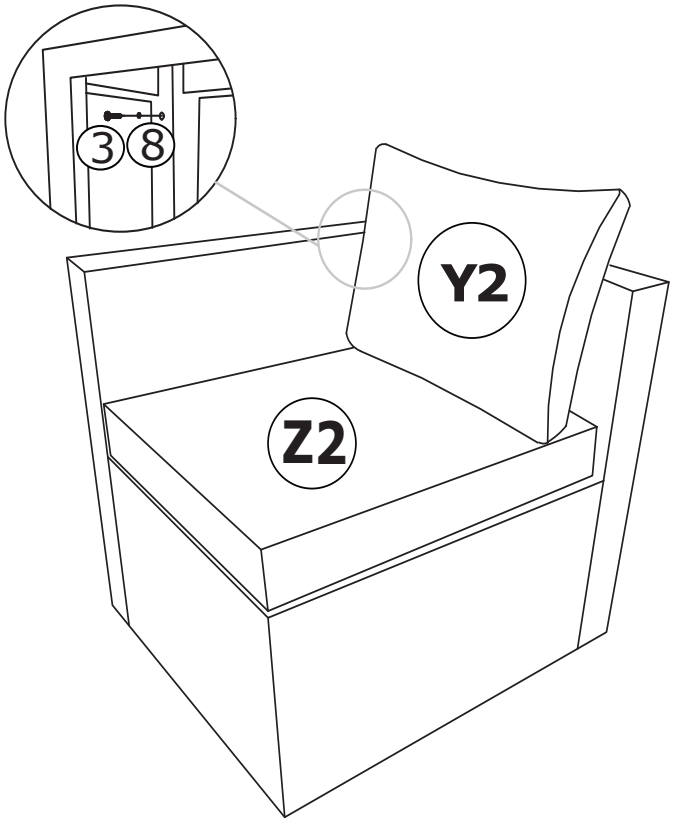

Finished

STEP 12

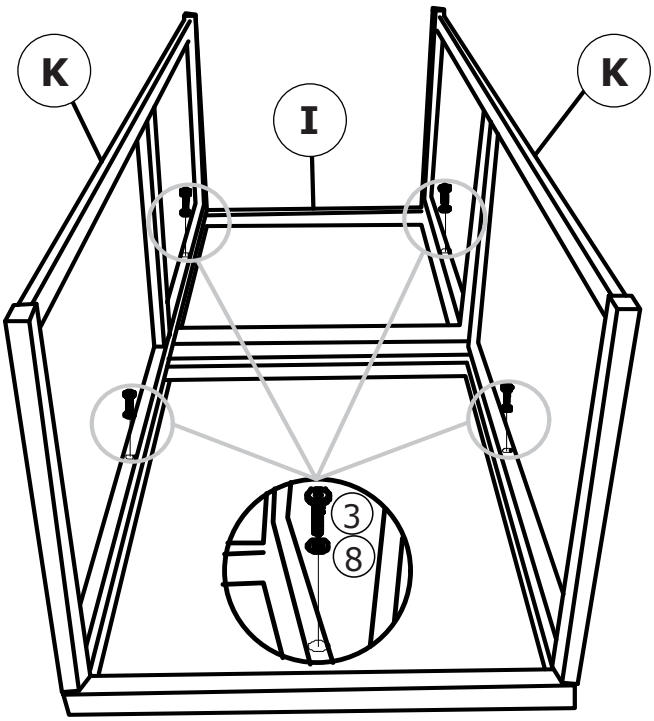

STEP 13

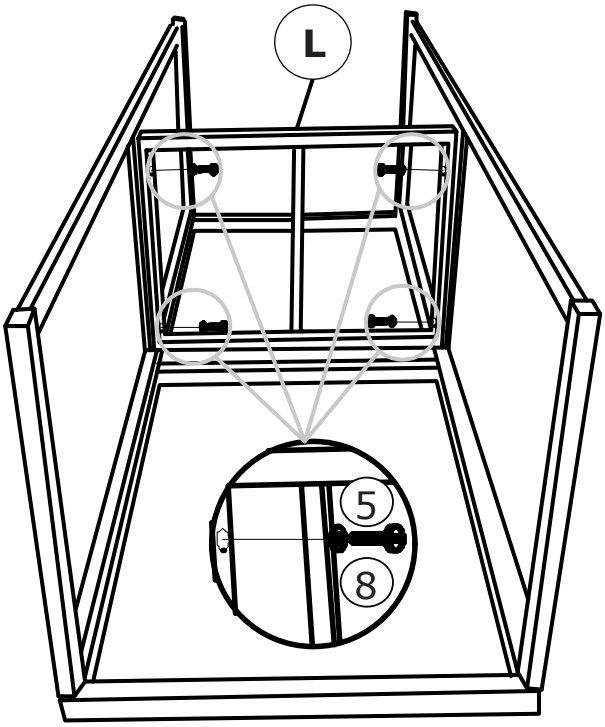

STEP 14

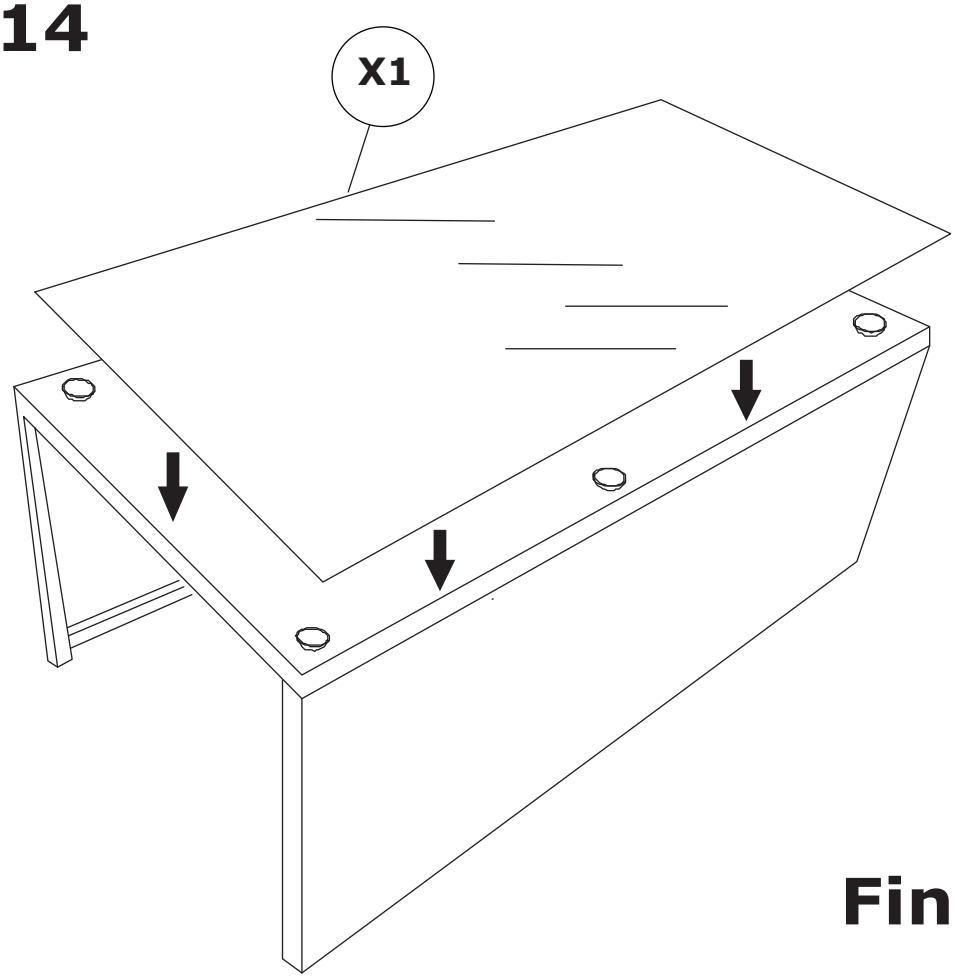

Finished

STEP 15

x2

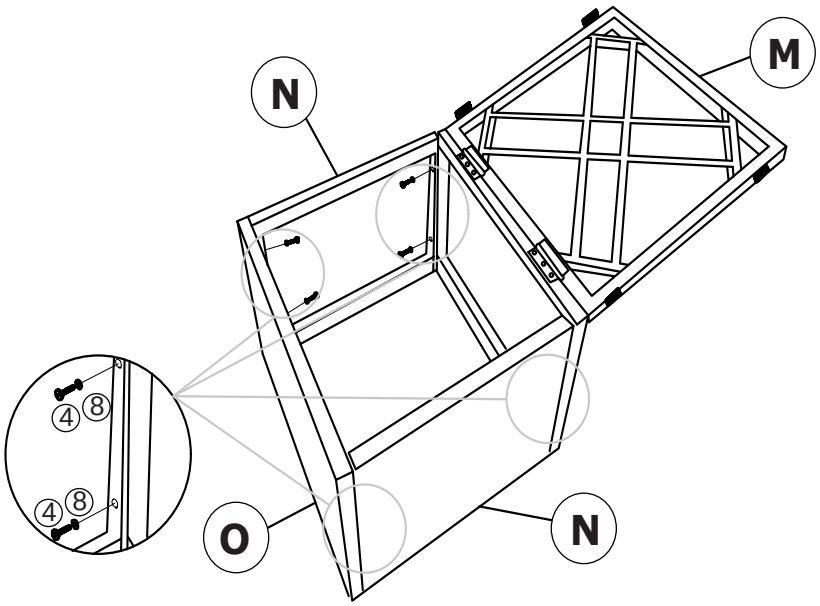

STEP 16

x2

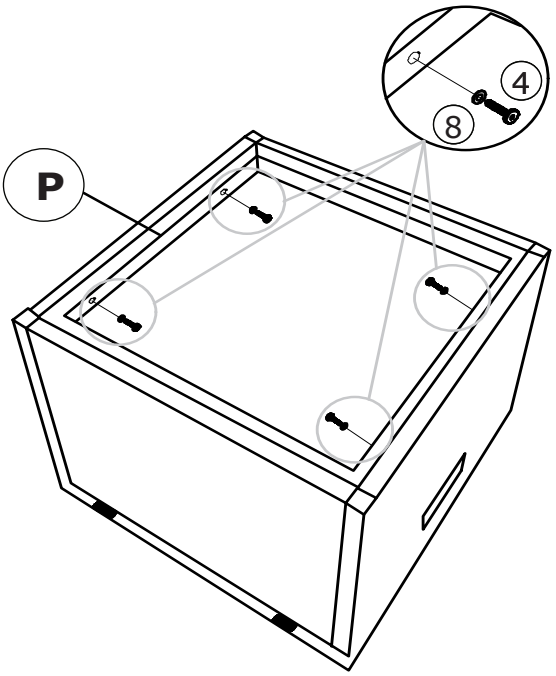

STEP 17

x2

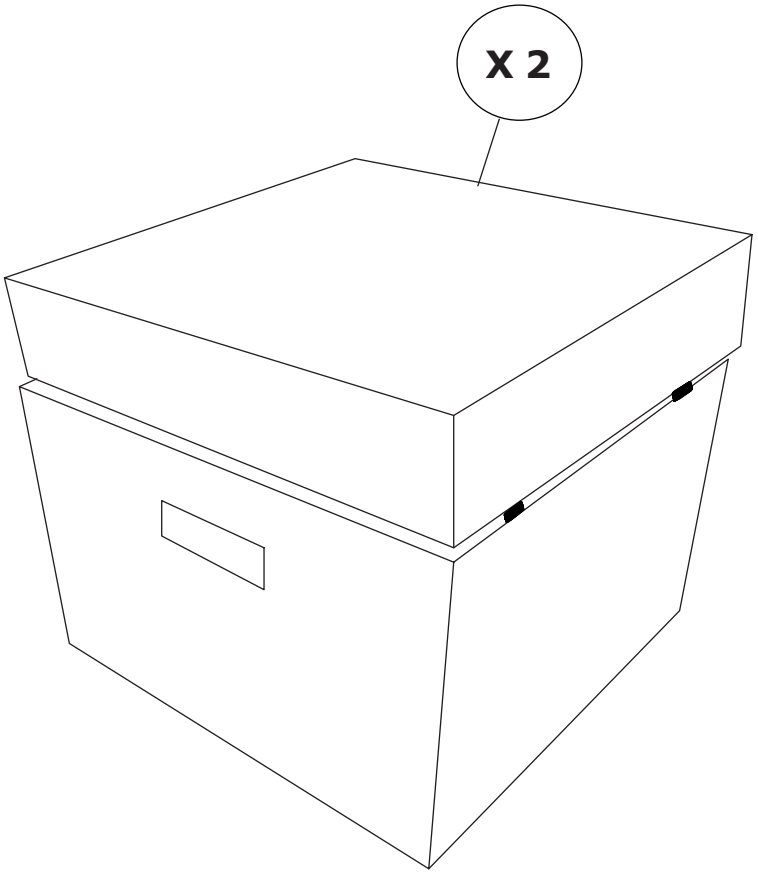

Finished

STEP 18

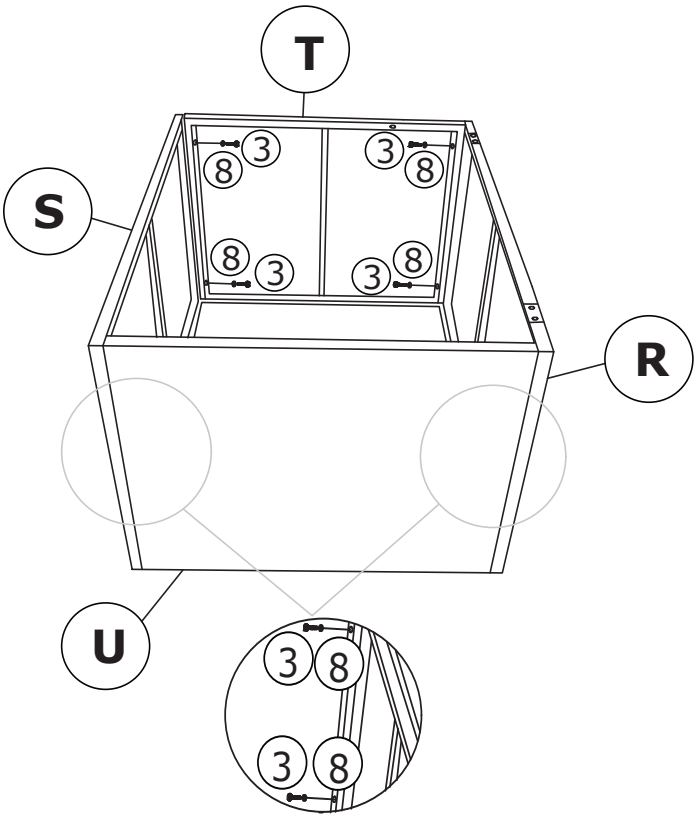

STEP 19

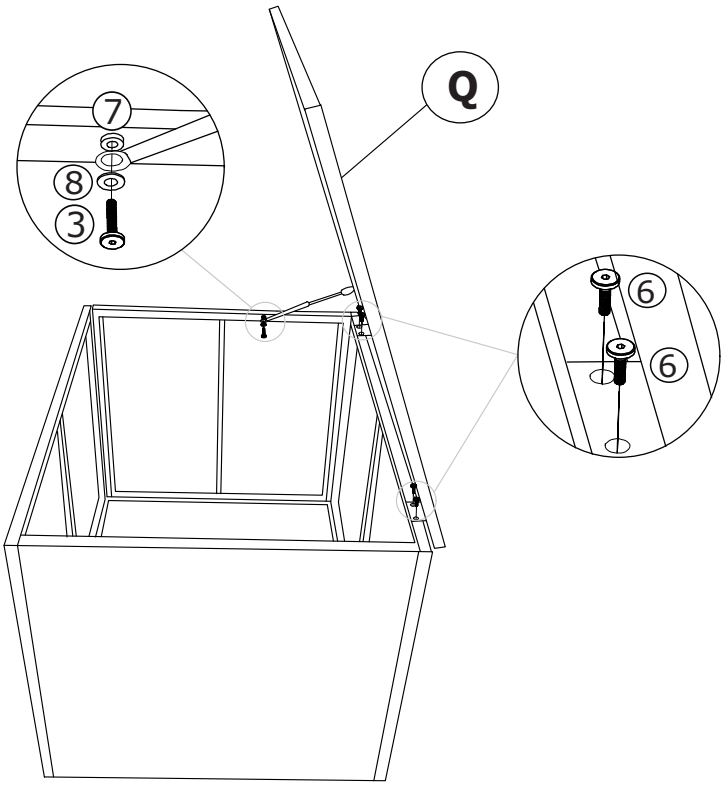

STEP 20

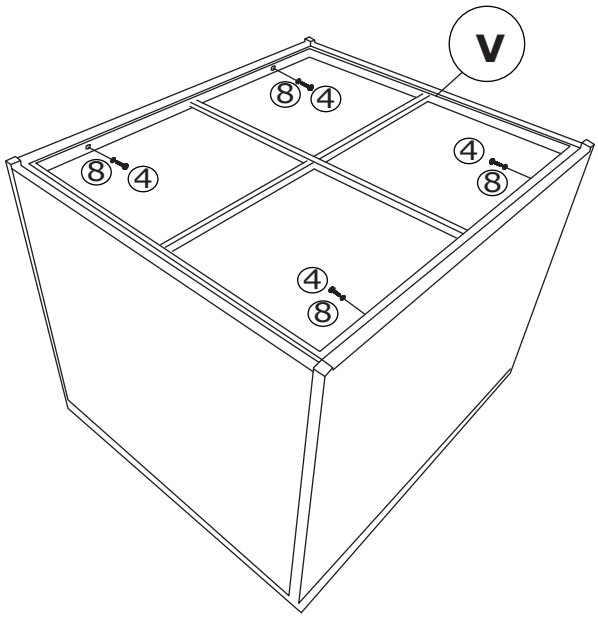

STEP 21

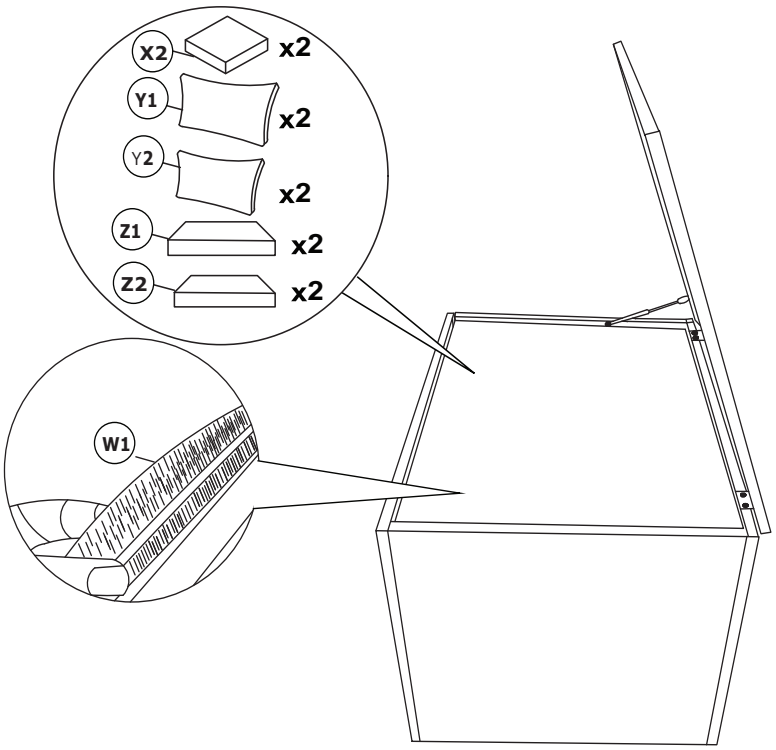

Install part W1 then arrange all cushions inside storage

Finished

STEP 22

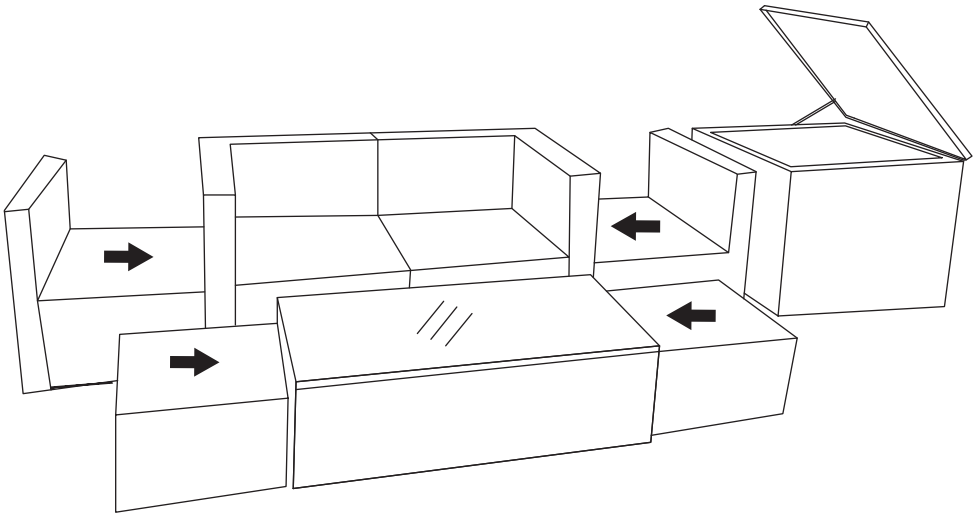

STEP 23

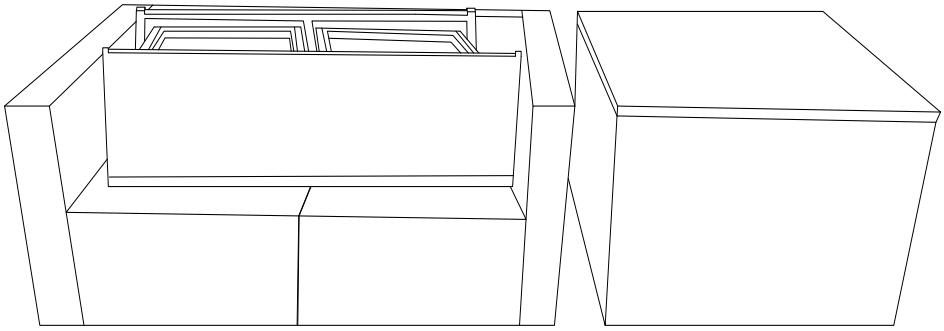

STEP 24

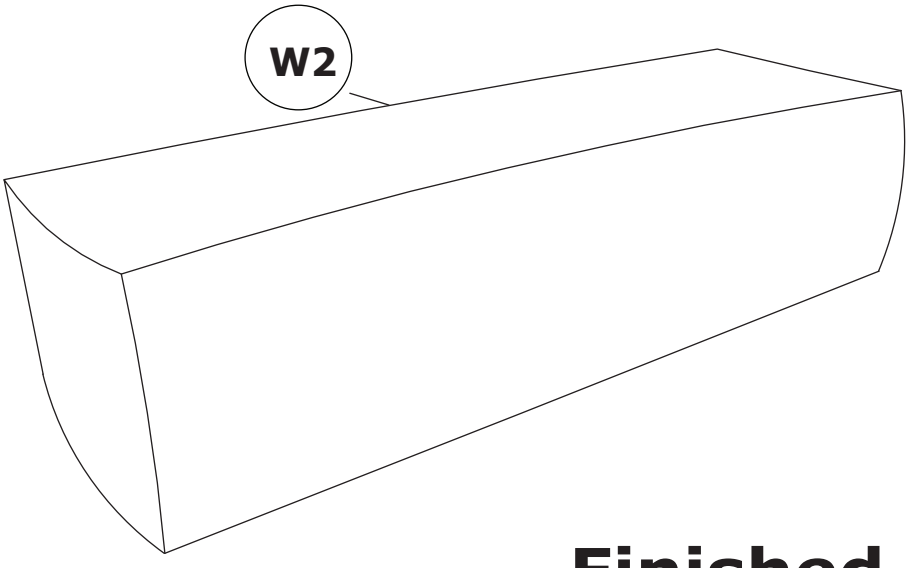

Finished

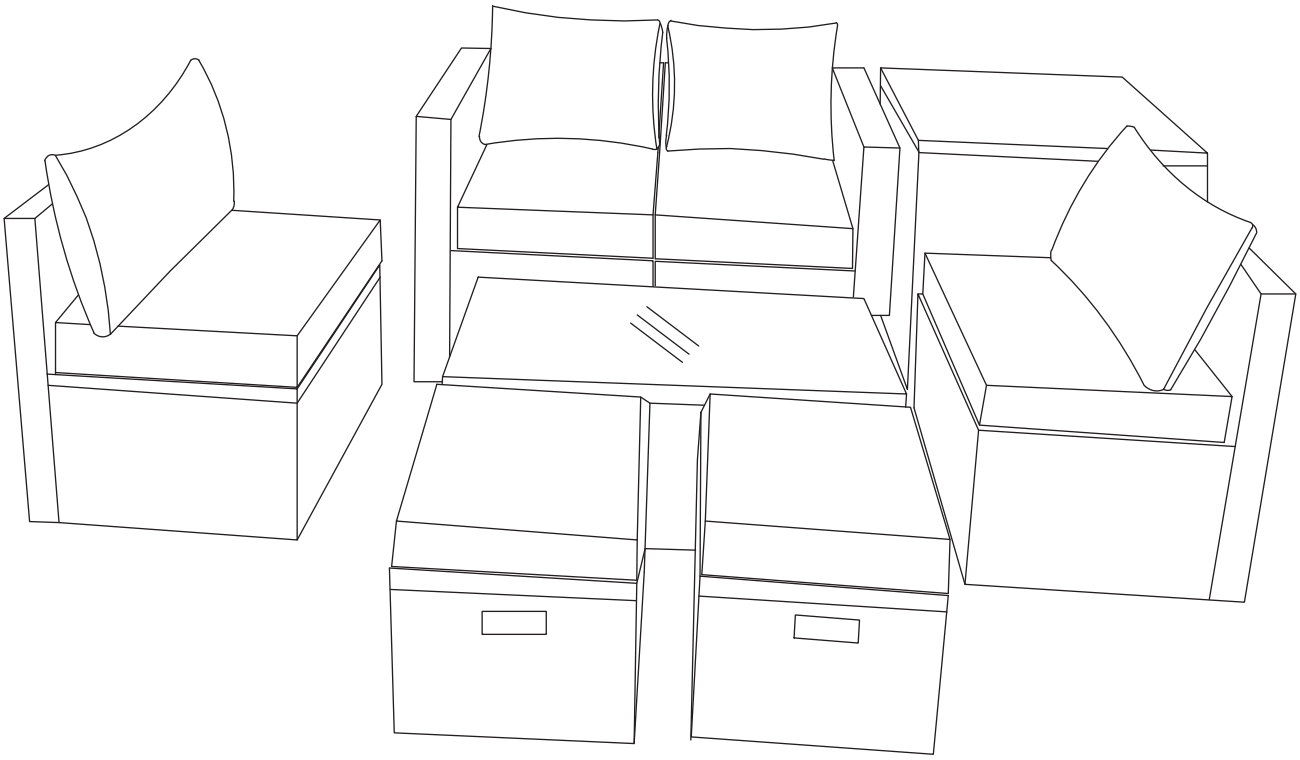

Care and Maintenance

Use a soft, clean cloth that will not scratch the surface when dusting.

Use of furniture polish is not necessary. Should you choose to use polish, test first in an inconspicuous area.Using solvents of any kind on your furniture may damage the finish. Never use water to clean your furniture as it may cause damage to the finish.

Liquid spills should be removed immediately. Using a soft clean cloth, blot the spill gently. Avoid rubbing. Check bolts/screws periodically and tighten them if necessary.

Further advice about wood furniture care

Please protect your outdoor furniture with a cover when not in use since Long-term sunlight exposure will result in the damage on the surface. In addition to sunlight damage, wood and metal frame suffers when exposed to extremes in temperature and humidity. Proper care and cleaning at home will extend the life of your purchase Following these important and helpful tips will enhance your furniture as it ages.

EN

With your inspiring rating, COSTWAY will be more consistent to offer you EASY SHOPPING EXPERIENCE, GOOD PRODUCTS and EFFICIENT SERVICE!

DE

Mit Ihrer inspirierenden Bewertung wird COSTWAY konsistenter sein, um Ihnen EIN SCHÖNES EINKAUFSERLEBNIS, GUTE PRODUKTE und EFFIZIENTEN SERVICE zu bieten!

FR

Avec votre évaluation inspirante, COSTWAY continuera à fournir une EXPÉRIENCE D'ACHAT PRATIQUE, des PRODUITS DE QUALITÉ et un SERVICE EFFICACE !

ES

Con su calificación inspiradora, COSTWAY será más consistente para ofrecerle EXPERIENCIA DE COMPRA FÁCIL, BUENOS PRODUCTOS y SERVICIO EFICIENTE.

IT

Con la tua valutazione incoraggiante, COSTWAY sarà più coerente per offrirti ESPERIENZA DI ACQUISTO FACILE, BUONI PRODOTTI e SERVIZIO EFFICIENTE!

PL

Dzięki twojej opinii COSTWAY będzie mógł oferować jeszcze WYGODNIEJSZE ZAKUPY, LEPSZE PRODUKTY i SPRAWNIEJSZĄ OBSŁUGĘ KLIENTA.

US office: Fontana **UK** office: Ipswich **AU** office: Truganina
DE office: Hamburg **FR** office: Saint Vigor d'Ymonville **PL** office: Gdańsk

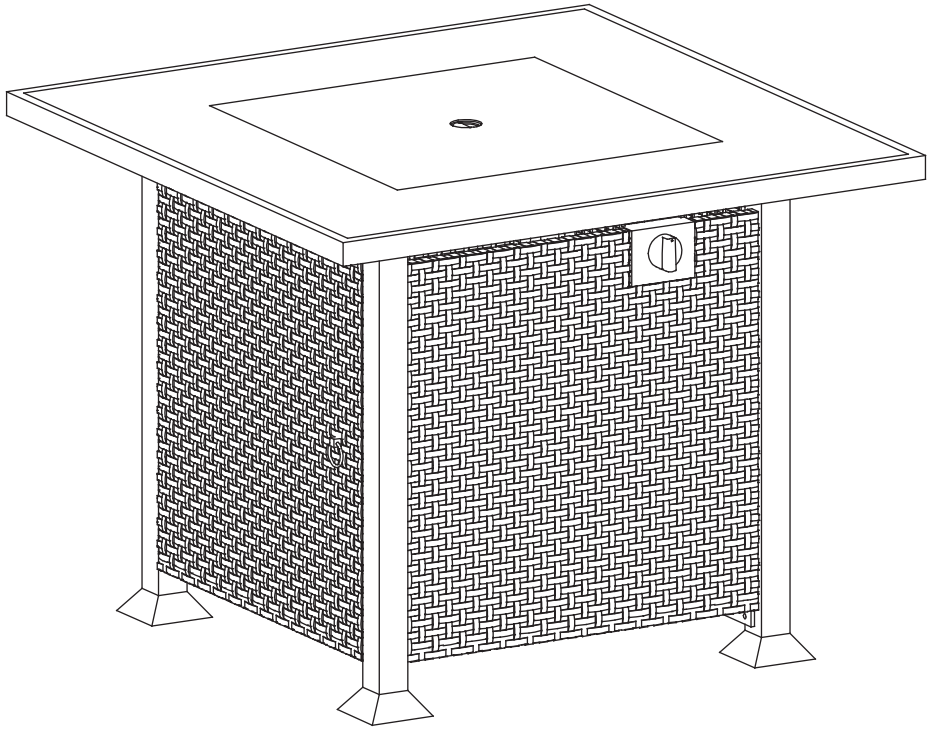

USER'S MANUAL

32-Inch Propane Fire Pit Table NP10618

THIS INSTRUCTION BOOKLET CONTAINS **IMPORTANT** SAFETY INFORMATION. PLEASE READ AND KEEP FOR FUTURE REFERENCE.

DANGER

FIRE OR EXPLOSION HAZARD

If you smell gas:

- Shut off gas to the appliance.
- Extinguish any open flame.
- If odor continues, leave the area immediately.
- After leaving the area, call your professional or fire department.

Failure to follow these instructions could result in fire or explosion, which could cause property damage, personal injury, or death.

WARNING

Do not store or use gasoline or other flammable vapors and liquids in the vicinity of this or any other appliance. An LP-cylinder not connected for use shall not be stored in the vicinity of this or any other appliance.

WARNING

If the information in this manual is not followed exactly, a fire or explosion may result causing property damage, personal injury, or loss of life.

WARNING

For outdoor use only.

Installation and service must be performed by a qualified installer, qualified technician, or the gas supplier.

WARNING

Improper installation, adjustment, alteration, service or maintenance can cause injury or property damage. Refer to the owner's information manual provided with this appliance. For assistance or additional information consult a qualified installer, qualified technician or the gas supplier.

INSTALLER:

Leave this manual with the appliance.

CONSUMER:

Retain this manual for future reference.

DANGER



CARBON MONOXIDE HAZARD

This appliance can produce carbon monoxide which has no odor.

Using it in an enclosed space can kill you.

Never use this appliance in an enclosed space such as a camper, tent, car or home.

Before you assemble or operate this unit, please carefully read this entire manual. Failure to do so may result in a fire, explosion, injury or death.

WARNING

• The installation of this unit must adhere to local codes or Propane Storage and Handling Code, CSA B149.2.

• THIS UNIT IS INTENDED FOR OUTDOOR USE ONLY! This product shall be used outdoors, in a ventilated space and shall not be used in any enclosed area.

• This unit is to be used with propane gas only! (sold separately)

• Do not attach a remote gas supply to this unit.

• Only use propane gas for this unit.

• Solid fuels shall not be burned in this appliance.

• When igniting this unit, stay away from the burner as the flame will light up and may cause injury.

• LP GAS WARNING: Do not use any more than 1/4in depth lava rocks/pumice stones/LavaGlass® above the burner holes. Doing so will suffocate the flame.

• If the propane gas tank is leaking gas, you may hear, see, or smell a hiss. Do the following:

1. Disconnect the propane gas tank. 2. Do not attempt to fix the problem yourself. 3. Contact professional or fire department for help.

• Applying too much propane may result in gas pooling and will not burn. Allow fresh air into the unit so that the remaining gas may escape.

• Do not use a flame to check for gas leaks.

• Manifold pressure: 11 inches w.c. (2.74kPa).

• Use LP propane tanks with the following dimensions: diameter 12 in, height 18 in - capacity 20 lbs.

• You must use a propane tank that has a collar to protect the gas valve.

• DO NOT fill tank over 80 percent full.

• The tank system must be set up for vapor withdrawal.

• Discontinue use if any part of the propane tank is damaged. Rust and dents may be hazardous and should be inspected by a gas supplier.

• Do not burn anything other than the provided materials for this fire table.

• Keep away from the unit for the first 20 minutes after igniting your unit for the first time, as lava rocks/pumice stones/L avaGlass® could pop out and cause injury. Should any rocks pop out, discard them.

• Always ensure that lava rocks/pumice stones/LavaGlass® are completely dry before use. Failure to do so will cause them to crack or pop.

• Do not operate unit until all parts are fully assembled.

• Do not paint or color any part of this heating unit.

• Unit may be hot while in use, do not attempt to move it while in use.

• Never leave this heating unit unattended while in use.

• This unit is not intended for cooking.

• Keep any flammable items away and do not use any other fireplace cover for this unit.

• Keep a safe distance to avoid burning skin or clothing.

• Do not sit or rest hands or feet on this heating unit.

• Never place hands or fingers on upper portion of this unit while in use.

• Keep all electrical cords and fuel supply hose away from heated surfaces.

• Combustible material should not be within 60 inches of the top of the unit, or within 48 inches around the entire unit.

• Keep the appliance area clear and free from combustible material, gasoline and other flammable vapors and liquids.

• If the flame goes out while burning, turn the gas valve off. Wait 5 minutes before repeating the initial lighting procedure. Once you have a flame started, hold down the control knob for 1 minute.

• Do not add water into the unit.

• Do not operate unit if any part has been under water. Immediately call a qualified service technician to inspect the appliance and replace any part of the control system and any gas control that has been under water.

• Do not disconnect any part while unit is in use.

• Do not store a spare propane tank on or near this unit.

• If the heating unit is indoors, detach the propane tank and leave outdoors.

• Do not operate on a boat or vehicle. This unit must be used on a flat surface and outdoors ONLY.

• Always remove protective cover before operating (if applicable).

• Do not set the protective cover over the unit until it is turned off and completely cooled down.

• Check for leaks after not using the unit for long periods of time.

• Children should never operate this unit. Children must be supervised while near this unit.

• Keep gas tank at least 5 feet away from unit when lit. (if external tank)

• Maximum gas supply: 250 psi; Min. gas supply: 10 psi.

• All installation and repair should be done by a qualified professional. This unit should be inspected annually and cleaned regularly.

• Inspect all elements of this heating unit before each use. If there is damage, the burner must be replaced.

• Keep the hose out from any pathways to eliminate any accidental damage. (if external tank)

• Be aware of the hazards of high temperatures and stay away from the unit to avoid any burns or injury.

• The gas supply tank should be constructed and marked with the specifications for the LP gas tanks of the U.S. Department of Transportation or the National Standard of Canada CAN/CSA- B339, LP gas tanks, spheres and tubes for Transportation of Dangerous Goods.

• The LP gas tank must have a listed overfilling prevention device and a QCCI or Type I, (CGA791) LP gas tank connection.

• This heating appliance should not be used on plastic or artificial wood decks.

• Children and adults should be alerted to the hazards of high surface temperatures and should stay away to avoid burns or clothing ignition.

• Young children should be carefully supervised when they are in the area of the appliance.

• Clothing or other flammable materials should not be hung from the appliance or placed on or near the appliance.

• Any guard or other protective device removed for servicing the appliance shall be replaced prior to operating the appliance.

• Installation and repair should be done by a qualified service person. The appliance should be inspected before use and at least annually by a qualified service person. More frequent cleaning may be required as necessary. It is imperative that the control compartment, burners and circulating airways of the appliance are kept clean.

IF APPLICABLE:

• Allow heating item to cool completely before placing on lid.

• DO NOT use heating item while lid is installed. Always remove the lid while heating item is in use.

Only use the regulator and hose assembly provided with this unit. Replacement parts must be supplied directly by the manufacturer.

Inspect the burner before use of this unit. If the burner shows any kind of damage, do not operate the appliance. For assistance with repair or replacement of the burner or any other parts, please contact COSTWAY.

NOTE: You must follow all steps to properly assemble this heating item. Make sure the gas valve is turned “OFF” before assembling. Do NOT attempt to assemble without proper tools.

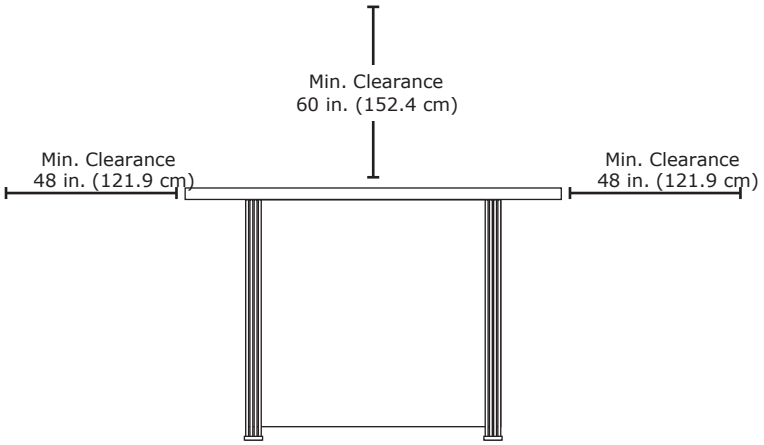

Combustible materials should not be within 60 inches of the top of the unit, or within 48 inches around the entire unit.

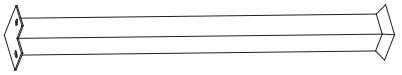

Table Leg
A x1

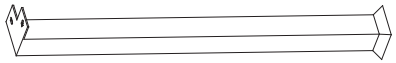

Table Leg
B x1

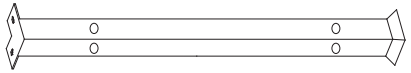

Table Leg
C x1



Table Leg
D x1

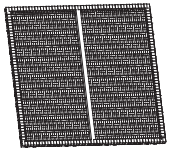

Panel
E x2

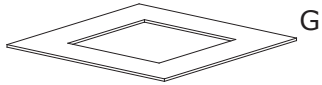

Glass panel
F x1

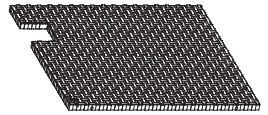

Panel
G x1

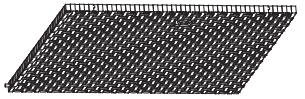

Door
H x1

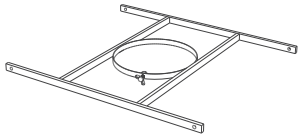

Metal Stand
I x1



Table Lid
J x1

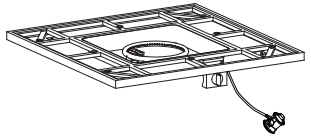

Fire Table
with Burner
K x1



Protective
Cover
L x1

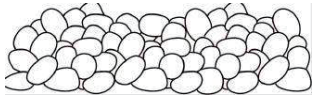

lava rocks
M x1

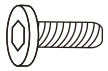

Screw(M6*12MM)
N x9



Screwdriver
O x1

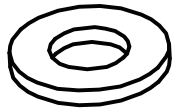

M6 Washer
P x24

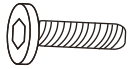

Screw(M6*25MM)
Q x4

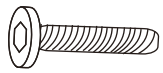

Screw(M6*35MM)
R x12



Control Knob
S x1

Do not lock the screws until the assembly is complete.

1

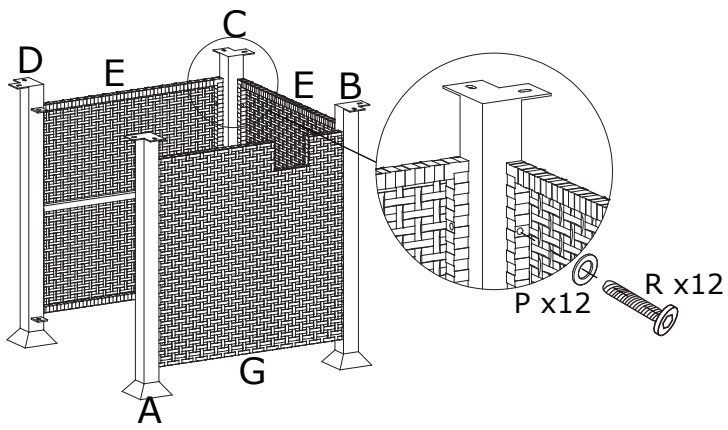

Attach the panels E,E,G to the legs A,B,C,D using 12 pcs M6x35mm screws (R) and 12 pcs M6 washers (P).

2

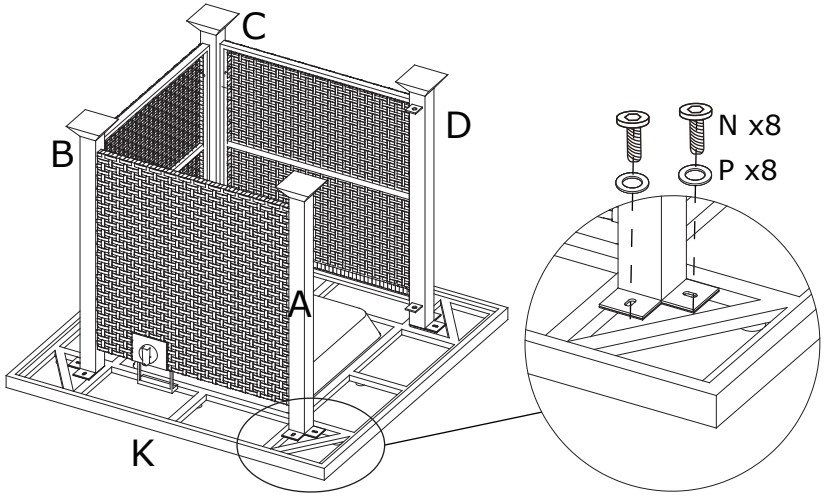

Attach the fire table (K) to the legs A,B,C,D using 8 pcs M6x12mm screws (N) and 8 pcs M6 washers(P).

3

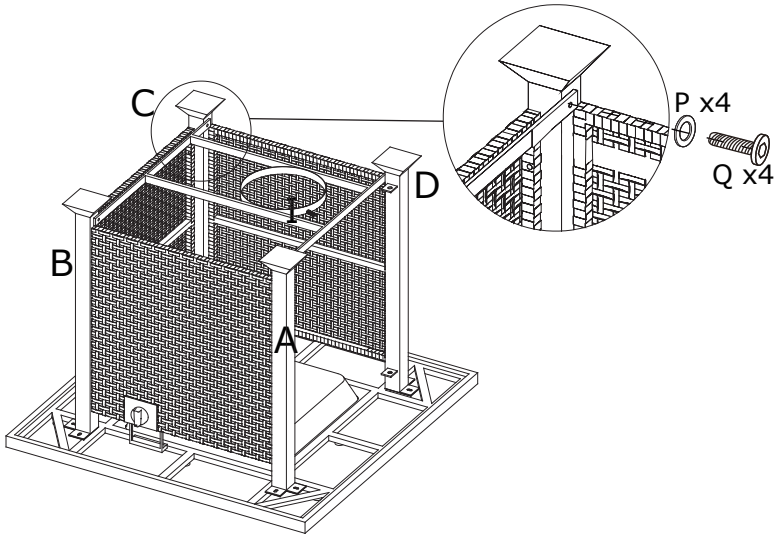

Attach the metal stand (I) to the legs A,B,C,D using 4 pcs M6x25mm screws (Q) and 4 pcs M6 washers(P).

4

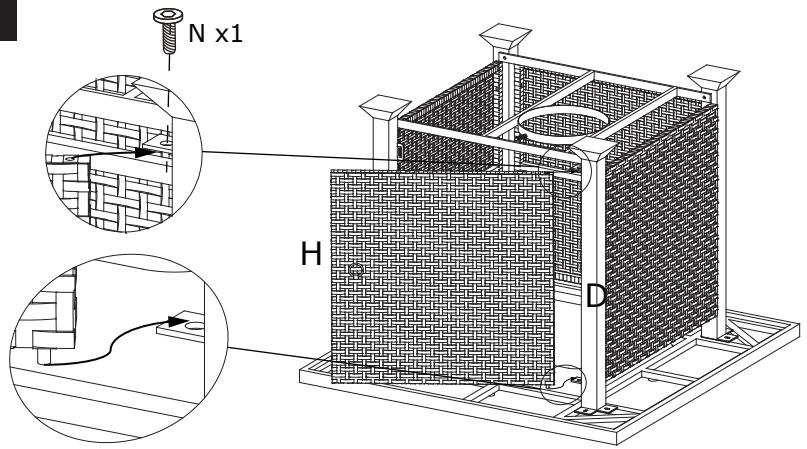

Attach the door (H) to the legs A,D using 1 pc M6x12mm screw (N) .

5

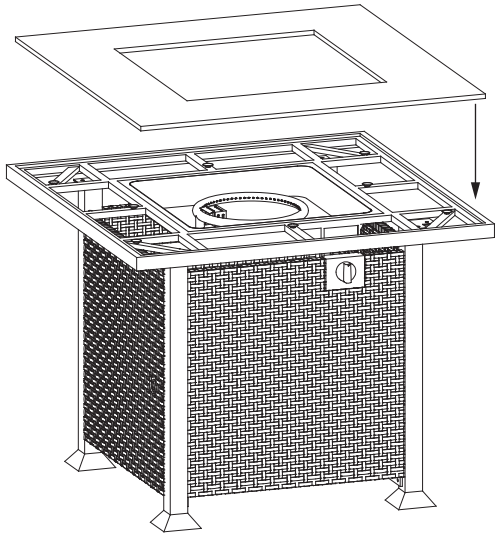

Put the glass panel (F) to the fire table (K).

6

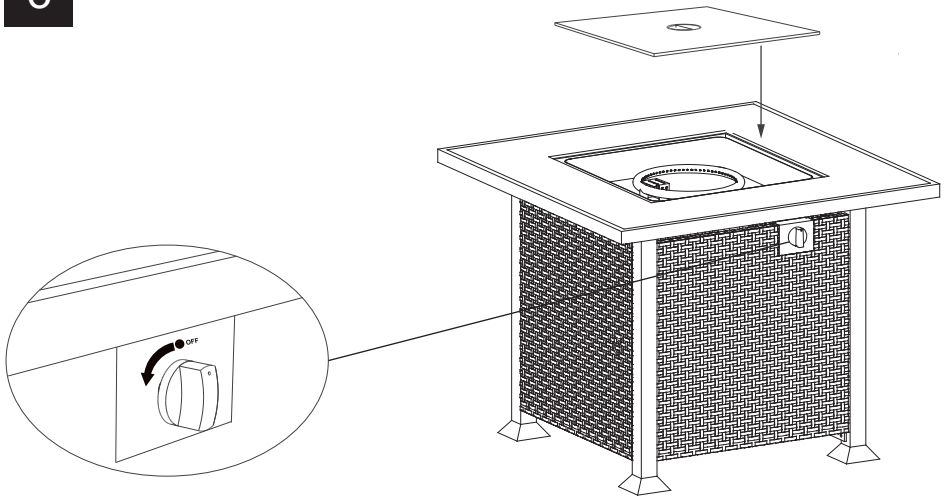

Chenc that the control knob(S) for the gas supply system is turned to the "OFF" position before starting any assembly,and put the lid (J).

7

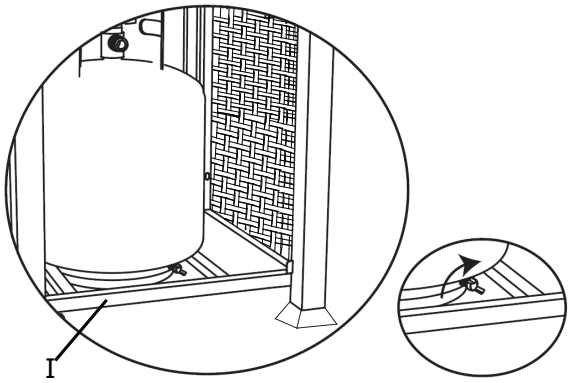

Place propane gas tank (not included) into the metal stand (I). Make sure the gas tank sits on the metal stand (I) completely. Turn the preassembled wing screw on the outer part of metal stand (I) clockwise to secure the propane gas tank tightly.

8

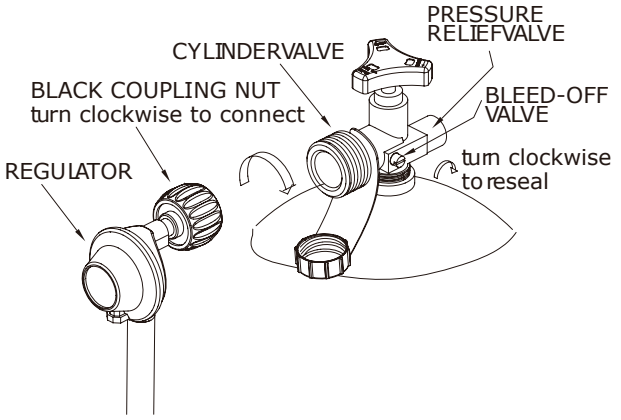

Turn the cylinder valve on the tank clockwise to close the propane tank. Attach the preassembled regulator from the fire table (K) to the cylinder valve by turning the regulator coupling nut clockwise. Make sure it is fastened securely and tighten connections by hand only.

9

Pour the box of lavarocks (M) into the firebowl.

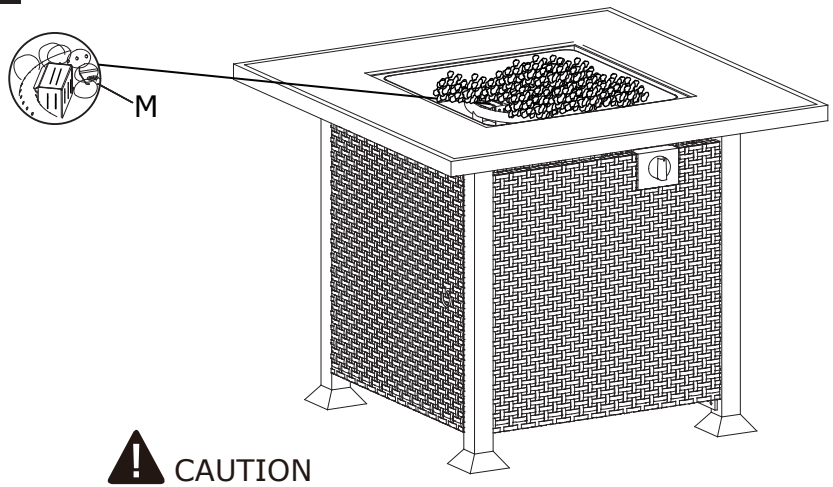

CAUTION

To ensure proper function, the guard on this burner should be free of lava rocks at all times.

10

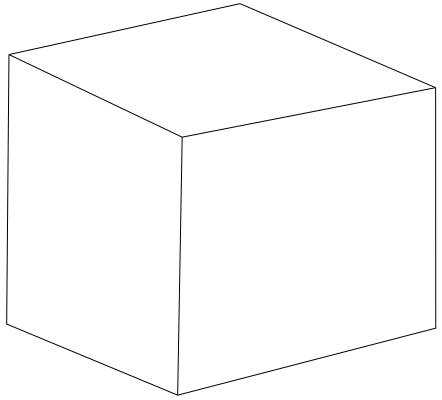

When the gas furnace products are not used outside, should be covered with a protective cover(L), to prevent the product for a long time under the sun and rain caused iron oxidation.

Before performing a leak test, be sure that no sparks can occur and you are in a spacious outdoor area. Connect the propane gas tank to the regulator and turn the valve on the unit to the “off” position. Brush a soap and water mixture on all connections. Turn the gas supply on; if bubbles occur on any connection there may be a leak. If you smell gas or a leak is discovered turn the gas valve off, disconnect propane gas tank and do not use the appliance until the leak is repaired.

Do not use the heating unit without inspecting the gas hose. If there are signs of wear or abrasion you must replace the hose (if applicable). Pumice stones/lava rocks/LavaGlass® could pop up and strike somebody’s face during the process of lighting this unit; stand away from the unit for the first 20 minutes after igniting. Flame height should be a yellow/blue color between 2 - 10 inches in height.

Wait 50 minutes after extinguishing flame prior to placing a lid (if applicable) or protective cover on heating item.

To Light

1. Make sure the control knob is in the "OFF" position.

2. Open the door and slowly open the valve on the propane gas tank by turning the knob counterclockwise.

3. Close the door on the body.

4. Push the ignition control knob in fully and rotate about 1/4 turn counterclockwise until a click is heard, it may take several attempts to light the burner. Once lit, keep holding down the control knob for 15 seconds.

5. If ignition doesn't occur within a few seconds, release the control knob and rotate to the "OFF" position. Wait for 5 minutes for gas to clear and then repeat the above lighting instructions.

6. To adjust the flame, turn the control knob either clockwise or counterclockwise depending on whether you want to lower or raise the flame.

To Extinguish

1. Turn control knob clockwise to the "HIGH" position; push and continue turning the control knob to the "OFF" position.

2. Close the cylinder valve on the propane gas tank if you don't intend to use it for a long time.

• Before performing any maintenance always disconnect propane gas tank.

• Store your product indoors during winter months. Avoiding extreme cold temperatures will prevent exposure damage.

• Keep the heating item free and clear from combustible materials.

• Visually inspect burner for obstructions and keep tank enclosure free and clear from debris.

• Use a soft brush to get rid of the mild stains, loose dirt and soil after the burner and pumice stones/ lava rocks/LavaGlass® are completely cooled down. Wipe down with a soft cloth.

• Harsh weather conditions may cause stubborn stains, discoloration and possibly rust pitting.

• Permanent damage may occur if powder or solvent comes in contact with painted or plastic components on this heating unit.

• Keep the heating unit stored away from direct sunlight.

• If storing this unit inside, disconnect the propane gas tank from the gas valve.

• Not using manufacturer approved or supplied parts/accessories may result in a defective condition and void the warranty of this heating unit.

• Always place lid (if applicable) or protective cover on heating item when not in use.

Problem	Cause	Solution
Heating unit won't light	Igniter pin and burner are wet	Dry off with a soft cloth
	Igniter battery is incorrectly inserted	Check which direction the battery is inserted
	Igniter pin is broken	Contact COSTWAY for a replacement part
	Electrode wire is loose or disconnected	Reconnect wire to the igniter box located inside the fire pit behind the igniter box
	Electrode wire is shorting between valve and igniter pin	Contact COSTWAY for a replacement part.
Burner won't light while using a match	No gas flow	Check that the gas tank isn't empty
	Regulator isn't connected securely to the tank	Tighten regulator connection to the gas tank
	Gas flow is obstructed	Check all hoses for kinks and bends
	Burner ports are clogged	Turn all gas flow connections off. Insert an opened paperclip (or similar item) into each of the burner ports to clear them out.
Heating unit emits a lot of black smoke	Flame is obstructed at burner ports	Check that all burner ports are free of any small lava rocks/pumice stones/LavaGlass® pieces
	Regulator hose is kinked	Straighten hose of all bends or kinks

Sudden drop in gas flow	No gas flow	Check that the gas tank isn't empty
	Excess flow safety valve has been activated	Turn the control knob to the 'off' position. Close the tank valve and disconnect propane gas tank. Turn the control knob to 'high'; wait 1 minute. Turn the control knob back to the 'off' position. Reconnect propane gas tank. Light the fire unit as indicated in the 'To Light' section of this manual.
Flame blows out easily	High or gusting winds	Increase flame to 'high'
	No gas flow	Check that the gas tank isn't empty
	Excess flow safety valve has been activated	See 'sudden drop in gas flow' above