HA-RACK-V2

Steel Headache Rack

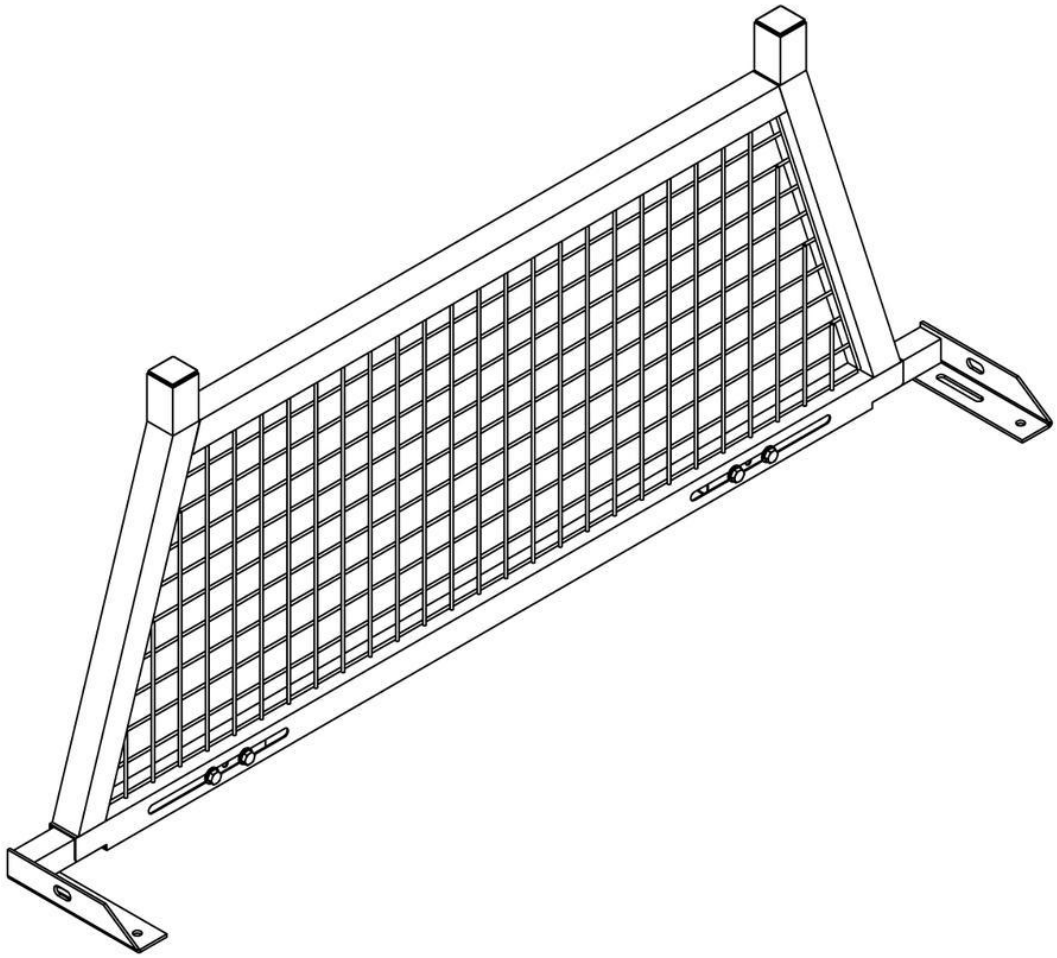

Installation Steps

1. Identify the Left Side Brace and Right Side Brace and see how these braces slide into the lower horizontal tubing of the Rack (see photos below).

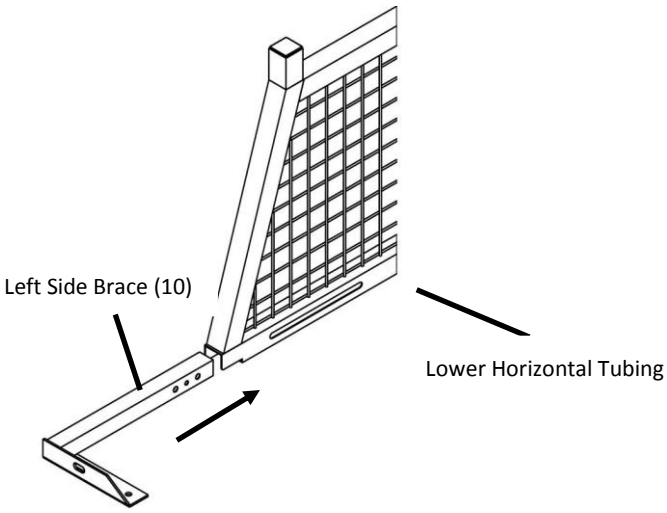

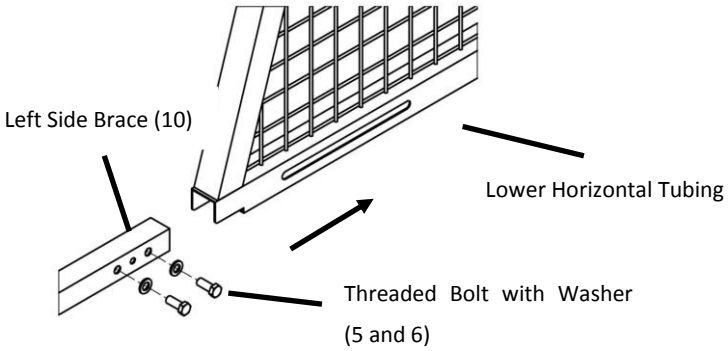

Each Side Brace is secured to the lower horizontal tubing with two threaded bolts with washers attached as shown above.

2. Note how the Side Braces fit above the truck bed (see photo below).

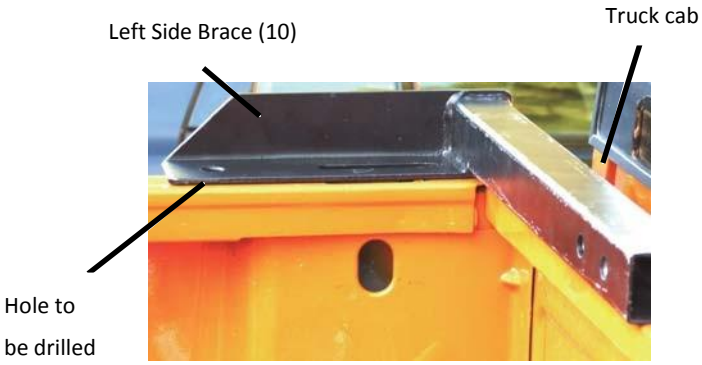

3. Note how the Side Braces are secured to the truck bed by using the truck's stake pockets (see

photo below). The included Locking Plate is maneuvered down into the stake pocket and turned horizontal so it will accept the attachment Bolt (inserted with washer from the top, and locked in place with nut from the bottom). Drilling of a hole is required on each side of the top lip of the truck bed to accept a second attachment bolt (see photo above). These same procedures will secure the other side brace.



4. The Rack is heavy; an assistant should be present to help assemble and position the product in place.
   If you are not experienced in doing this type of product assembly and hole drilling, the assembly and set-up of this product should be done by a qualified service technician. When drilling holes, always be careful to avoid hidden cables and wires in the drilling path.

5. As previously described, assemble both side braces. Finger tighten the attachment bolts as the braces will have to be adjusted for width once lifted onto the front of the truck bed.

6. Lift the Rack in place. Make adjustments for width and mark truck bed upper lip where the two drilled holes are to be. After completing these tasks, mount the Rack in place using the hardware previously described. Tighten all hardware.

7. When using the extension uprights on the upper frame to support longer cargo, frequently check the cargo. Loads can shift in transit. During transit, periodically stop and check the contents of the load. Make sure that the Heavy-Duty Steel Headache Rack remains firmly in place, and that all cargo is tightly secured.

Explosion diagram and parts list

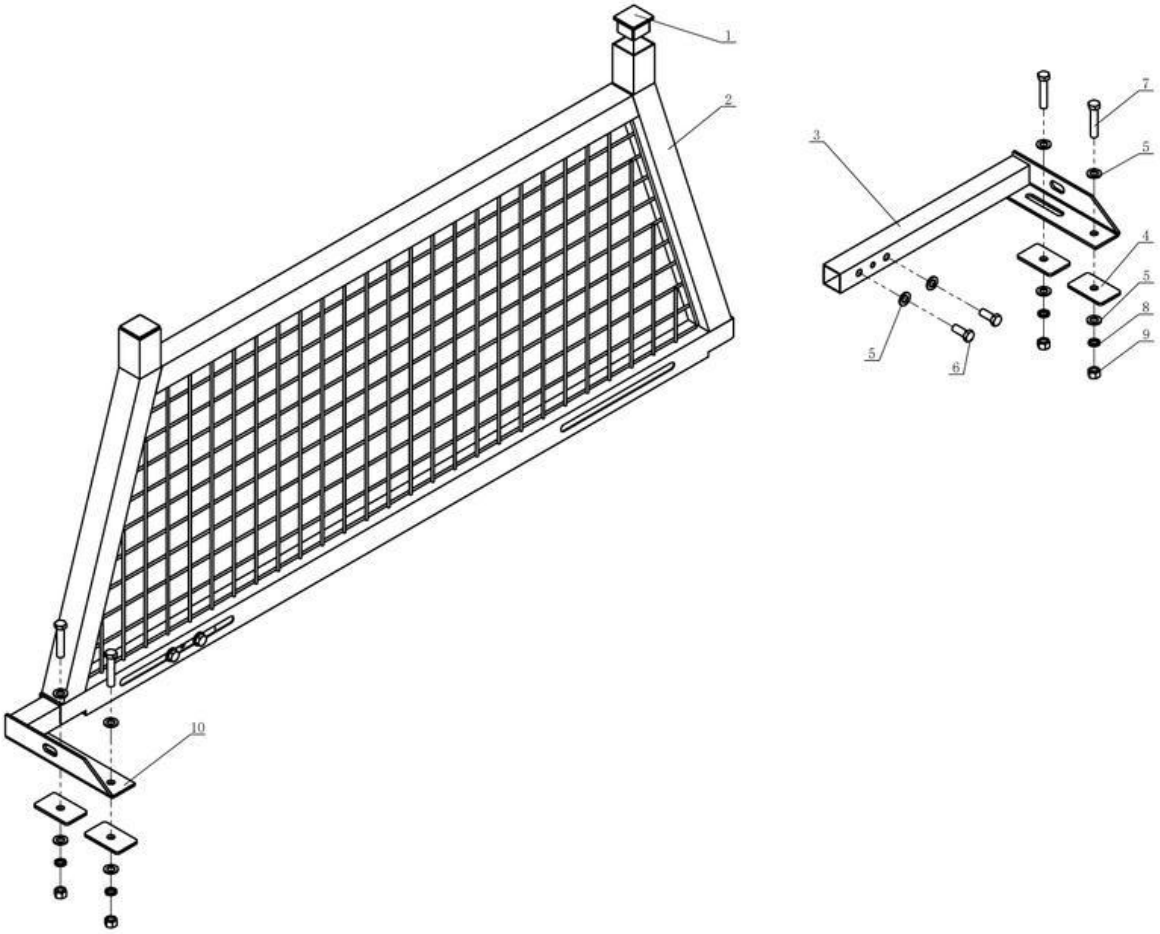

Part	Description	Quantity		Part	Description	Quantity
1	End Cap	2		6	Bolt (short)	4
2	Rack Frame	1		7	Bolt (long)	4
3	Right Side Brace	1		8	Spring Washer	4
4	Locking Plate	4		9	Nut	4
5	Washer	12		10	Left Side Brace	1