Enjoy Cozy Life!

Mogan 10'x13' Aluminum Pergola
Assembly Manual

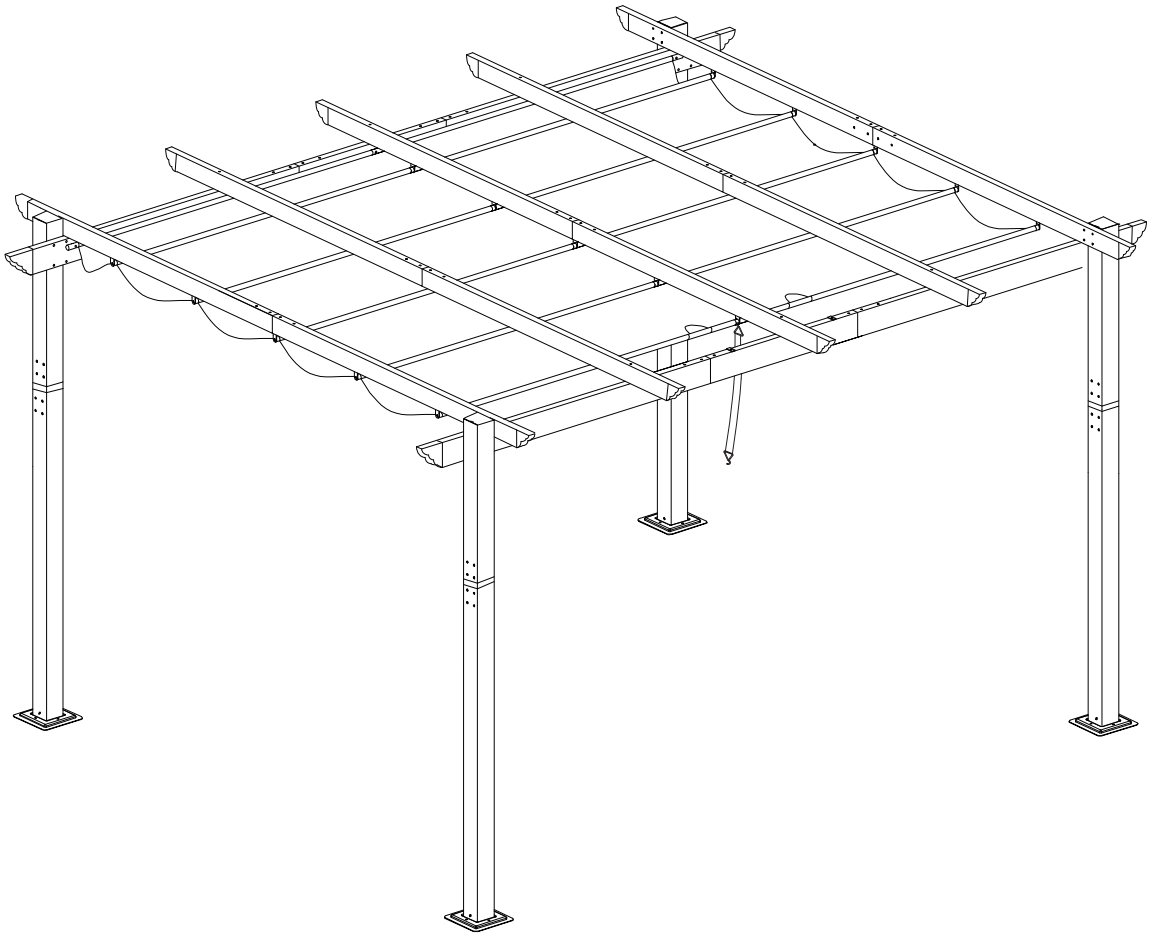

Kozyard LLC Products

WWW.KOZYARD.COM

© Copyright 2016 - 2023 Kozyard LLC. | All Rights Reserved.
Version:20231006

Warnings and Cautions

- Please read and follow this assembly and operation guide to reduce the risk of personal injury and damage to your gazebo.
- Do not discard any of the packaging until you have checked that you have all the parts in place.
- Please close the Canopy, refraining from any damage in storm, snow, or bad weather.
- Some parts may have sharp edges or corners. To ensure your safety, follow basic safety precautions to reduce the risk of injury. Please note that this item contains small parts which could be swallowed by children. Keep it out of reach of children under 3 years old and pets during installation.

Two or more people are required for aseembly and disassembly.

Do not fully tighten screw prior to complete assembly.

Pre-assembly
Tools that may be required.(Not included in boxes)
Note: Tools are not shown to actual size and scale.

Level

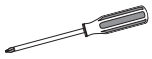

Phillips Screw

Drill

Allen Key

Stepladder

10'X13' Pergola anchore blueprint

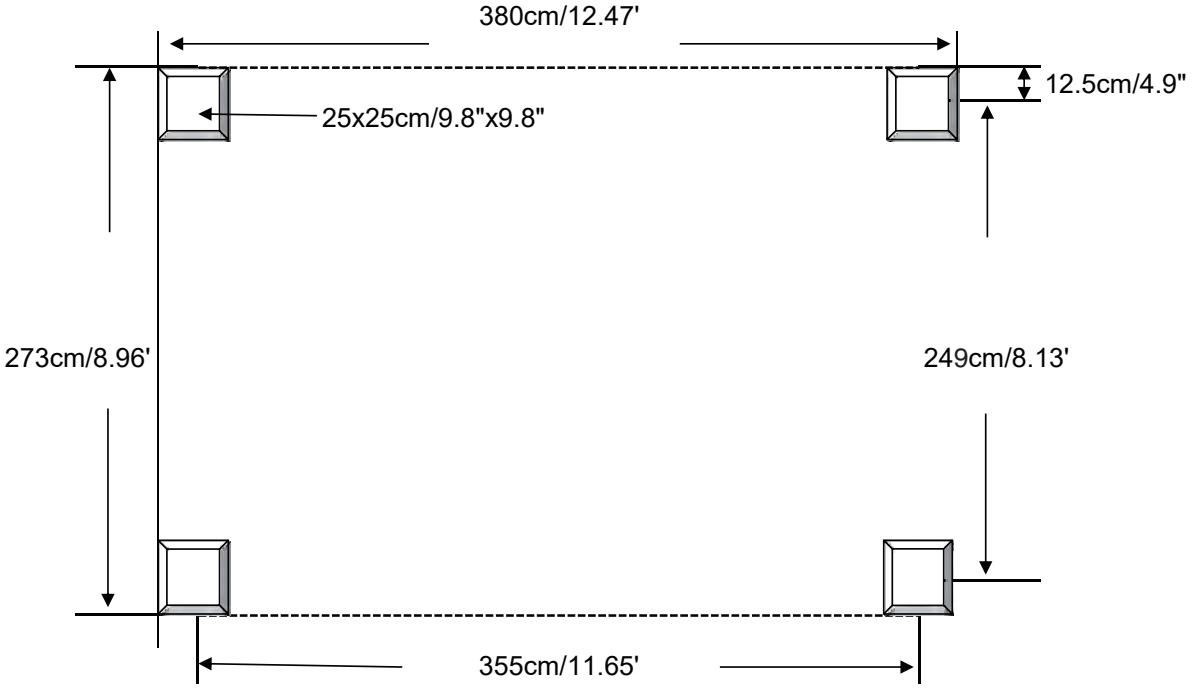

Anchoring poles into concrete is strongly recommended.
Ensure the gazebo is positioned on level ground

Attention: Prior to assembly, verify that all parts and pieces are included to ensure an efficient installation process.

Parts list

A 4X Pole	A1 2X 1 or 3 Position Short Pole	A2 2X 2 or 4 Position Short Pole	
B 1X Side Tube	B1 1X Side Tube		
B2 1X Side MiddleTube	C 1X Side Tube		
C1 1X Side Tube	C2 1X Side MiddleTube		
D 2X Side Track Tube	D1 2X Side Track Tube		
E 1X Middle Track Tube	E1 1X Middle Track Tube		
F 2X Beam Tube	F1 2X Beam Tube		
G 1X Still Round Tube	G1 1X Still Round Tube		
H 5X Moveable Round Tube	H1 5X Moveable Round Tube		
I 4X Plate	J 154X+5X M6x16 Bolt		

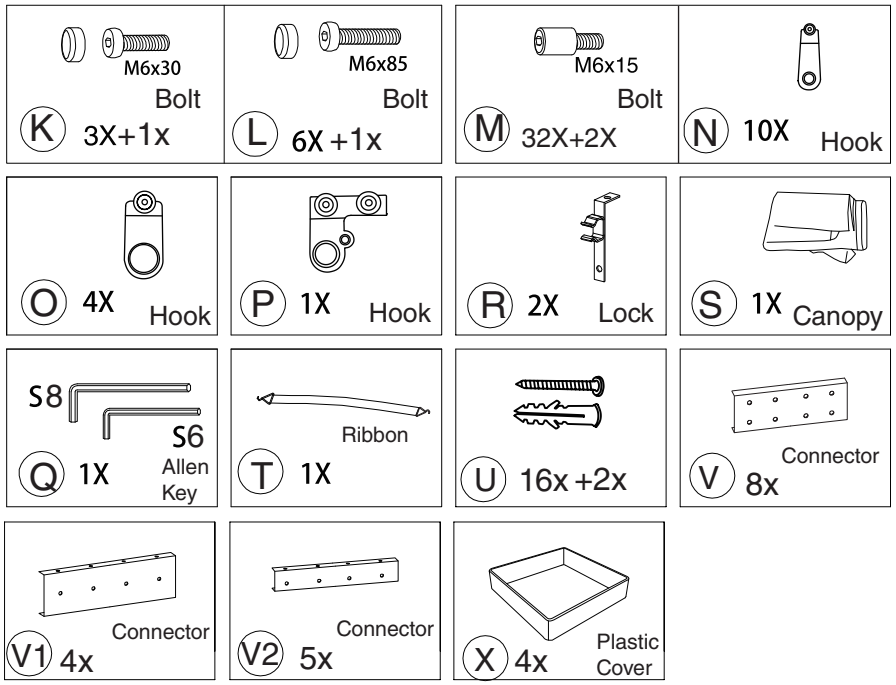
M6x30
Bolt
K 3X+1x
M6x85
Bolt
L 6X +1x
M6x15
Bolt
M 32X+2X
N 10X Hook
O 4X Hook
P 1X Hook
R 2X Lock
S 1X Canopy
S8
S6
Q 1X Allen Key
Ribbon
T 1X
U 16x +2x
Connector
V 8x
Connector
V1 4x
Connector
V2 5x
Plastic Cover
X 4x

OVERALL

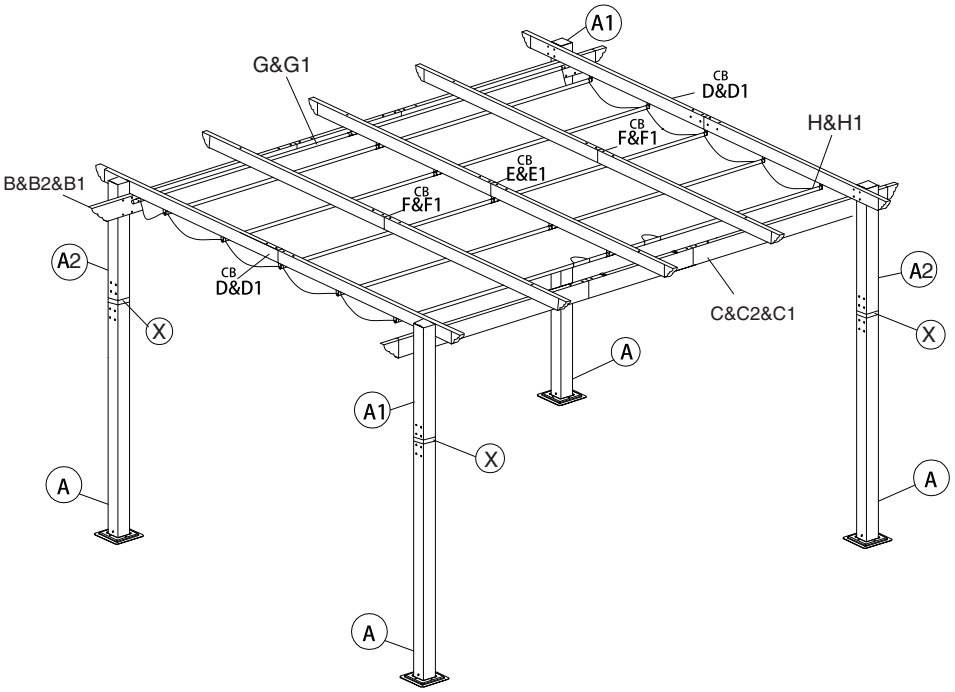
A1
G&G1
CB D&D1
H&H1
CB F&F1
CB E&E1
B&B2&B1
CB F&F1
A2
CB D&D1
A2
C&C2&C1
X
X
A
A1
X
A
A
A

A 4X

A1 2X

A2 2X

X 4X

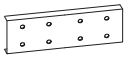

V 8X

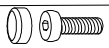

M6x 16

J 64X

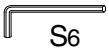

S6

Q 1X

Step 1:

First, remove the plastic plugs from Part A1/A2 and Part A.

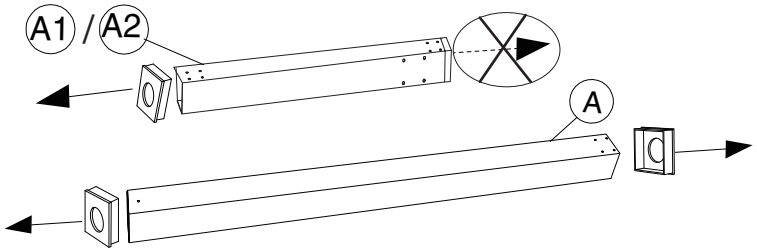

Then, place Part X on the four poles (Part A) and connect A and (A1 or A2) by using Bolt J to attach the four poles.

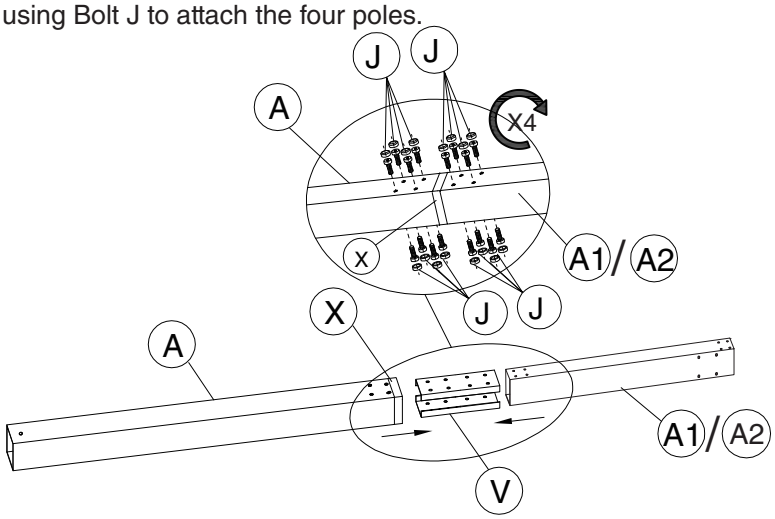

Do not tighten the bolts too much when inserting A into A1 and A2.

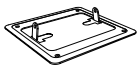

I 4X

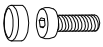

M6x 16

J 8X

S6

Q 1X

Step 2:

Connect Part I to the poles using Bolt J.

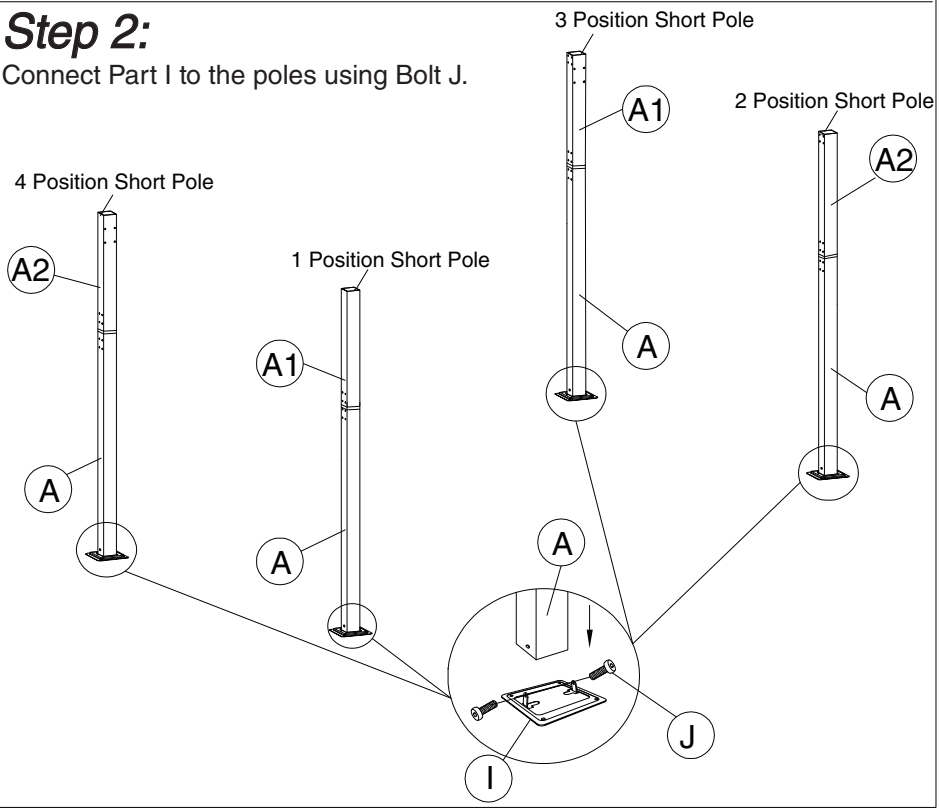

B 1X

B1 1X

B2 1X

C 1X

C1 1X

C2 1X

R 2X

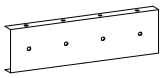

V1 4x

M6x 16

J 32X

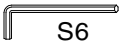

S6

Q 1X

Step 3:

Connect Part B, Part B1,Part B2 using Bolt J to assemble Main Beam 1.

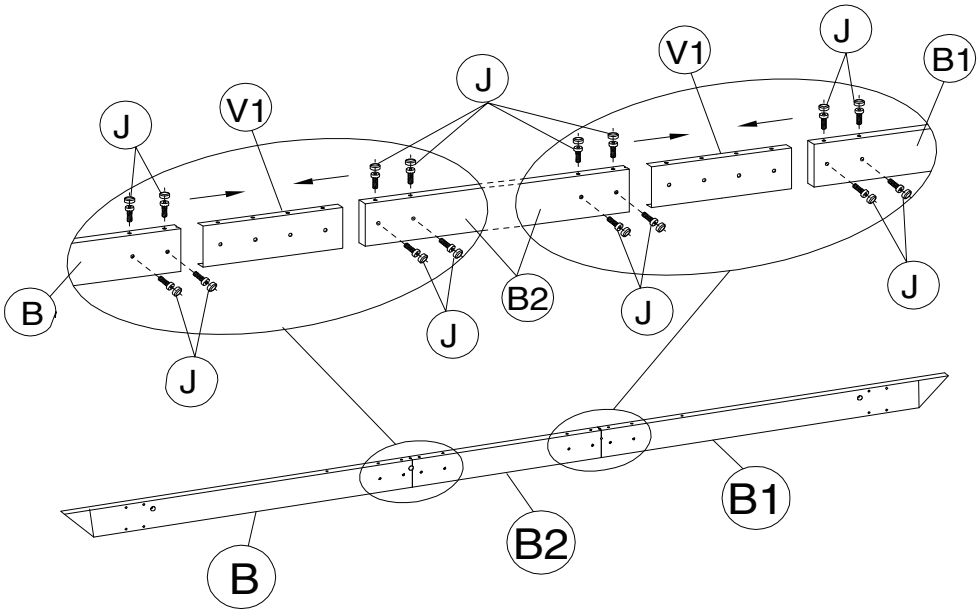

Connect C, C1, C2 using Bolt J to assemble Main Beam 2.
Simultaneously, attach Part R to C2 using Bolt J.

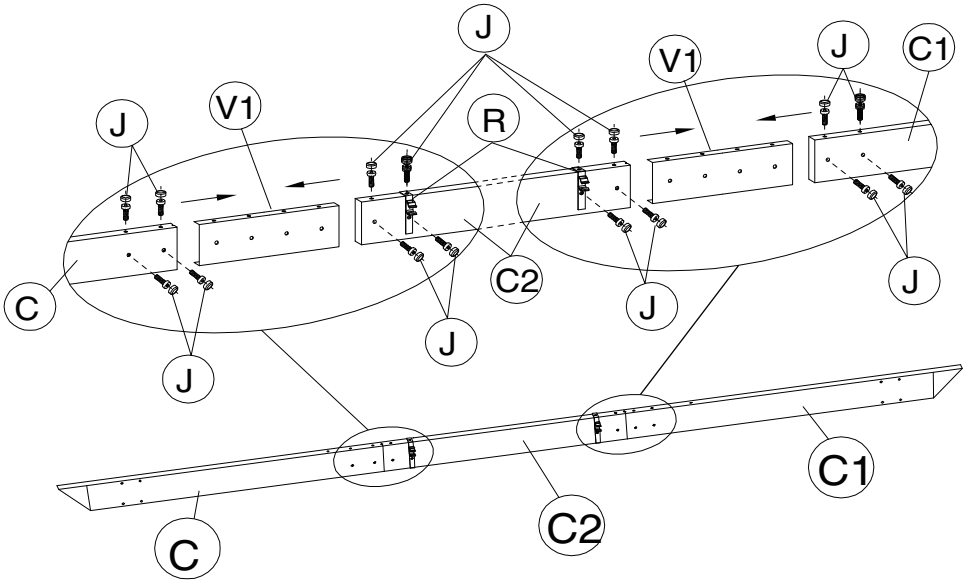

M6x15

M 16X

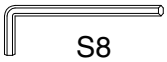

S8

Q 1X

Step 4:

Connect Main Beam 1 and Main Beam 2 to the Poles using Bolt M.

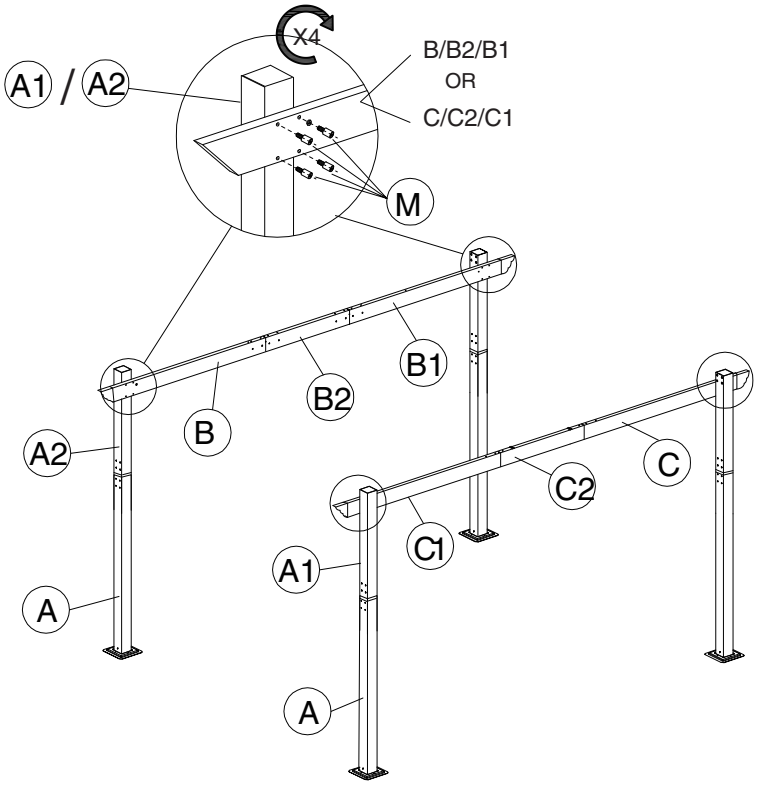

D 2X

E 1X

N 10X

O 4X

P 1X

Step 5:

1. Insert Hook Part N into the slot of Part D. Repeat twice.

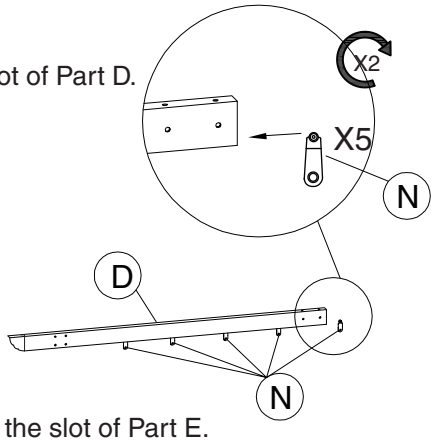

2. Insert Hook P and Hook O into the slot of Part E.

- Please ensure that Hook P is inserted according to the method shown in the diagram and not the opposite way.

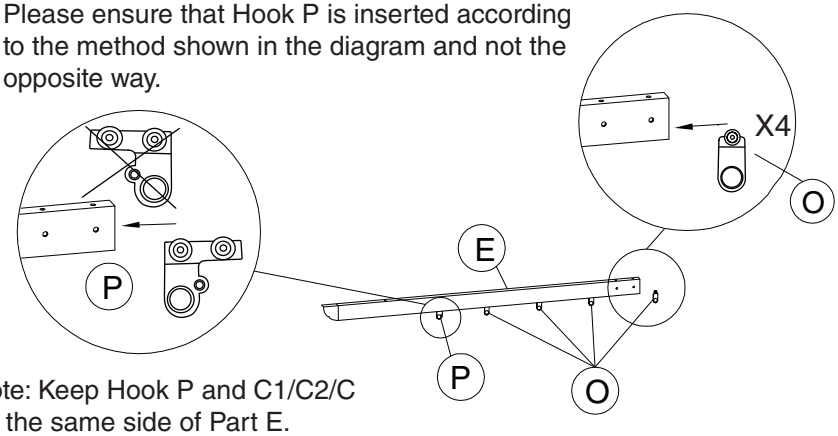

Note: Keep Hook P and C1/C2/C on the same side of Part E.

D 2X

D1 2X

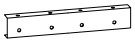

V2 2x

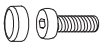

M6x16

J 16X

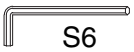

S6

Q 1X

Step 6:

Connect D and D1 to assemble the Cross Beam (D and D1) using Bolt J.

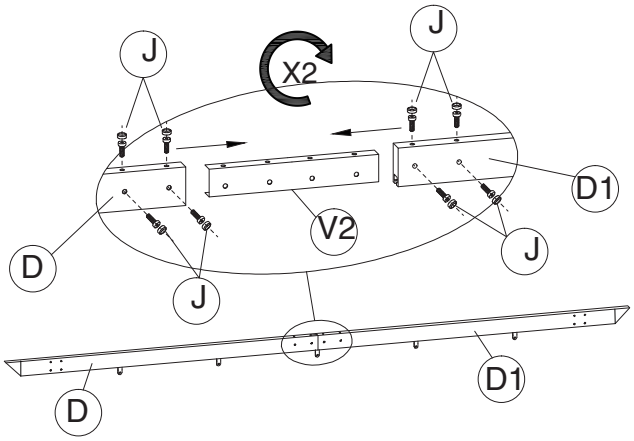

M6x15

M 16X

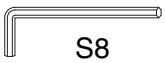

S8

Q 1X

Step 7: Connect the Cross Beam (D and D1) to the four Poles using Bolt M.

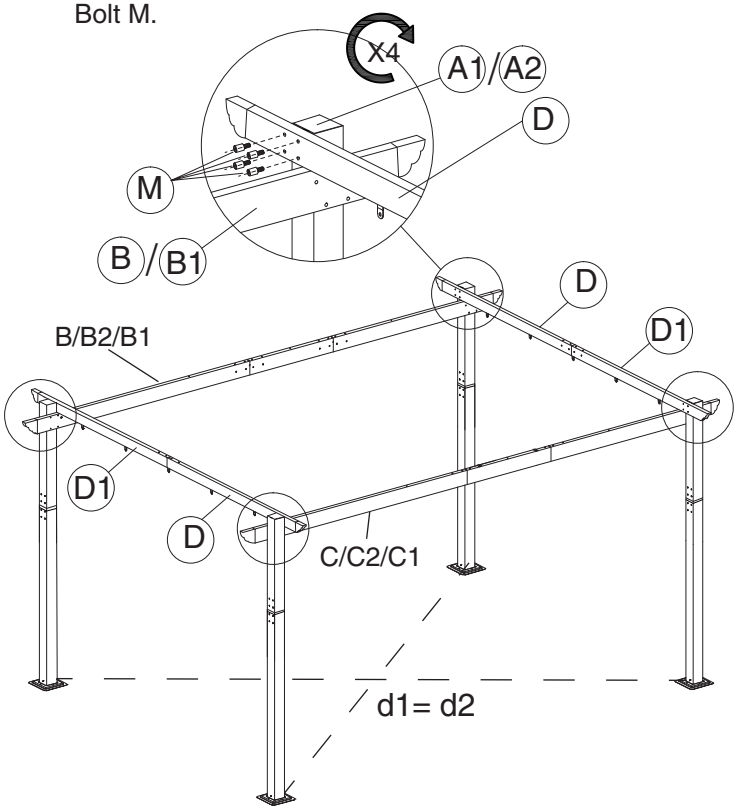

E 1X

E1 1X

F 2X

F1 2X

M6x16

J 24X

S6

Q 1X

V2 3x

Step 8

1. Connect E and E1 using Bolt J to assemble the Cross Beam (E and E1).

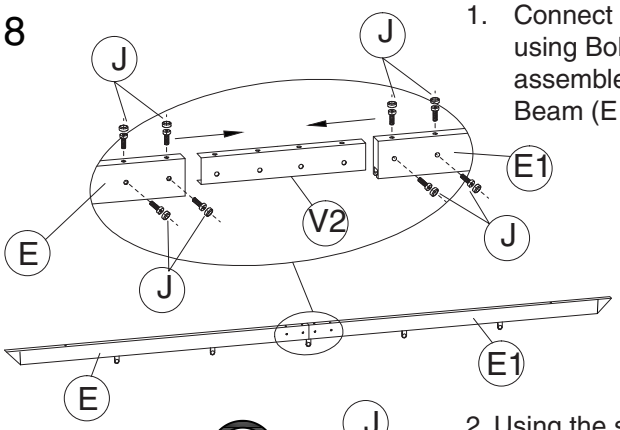

2. Using the same method, assemble the Cross Beam (F & F1) with F and F1.

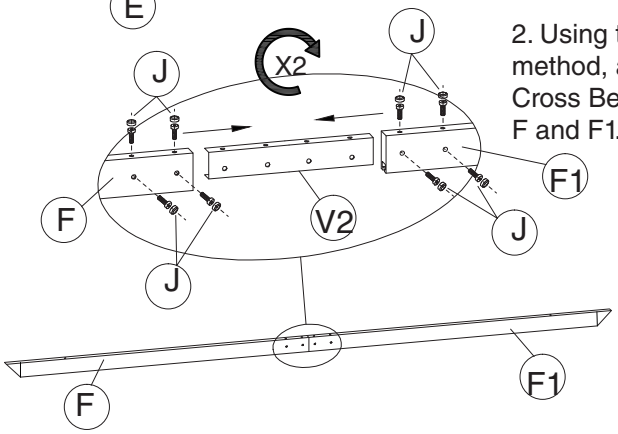

M6x85

L 6X

S6

Q 1X

Step 9:

Connect the Cross Beams (E and E1) and (F and F1) to Main Beams 1 and 2.
Please ensure that Hook P and C/C1 remain on the same side.

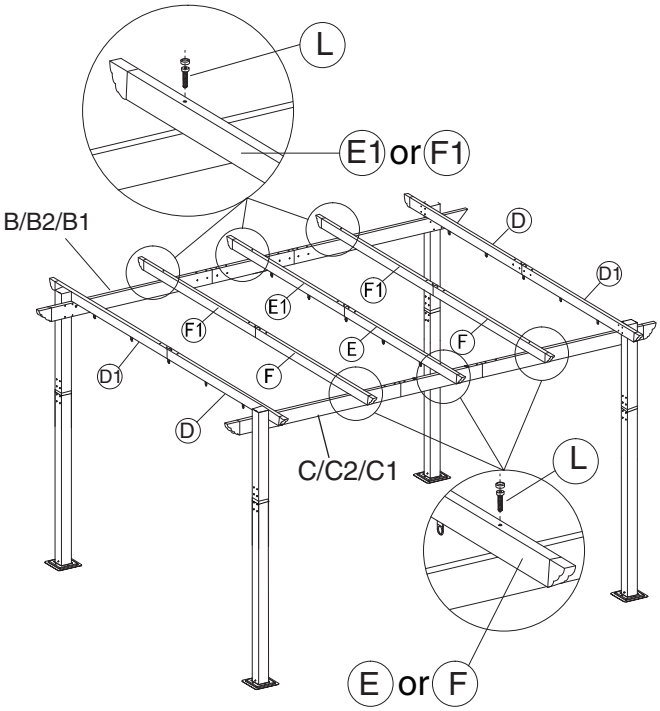

G 1X

G1 1X

H 5X

H1 5X

S 1X

Step 10:

Insert G, G1, H, and H1 into the canopy from the side.

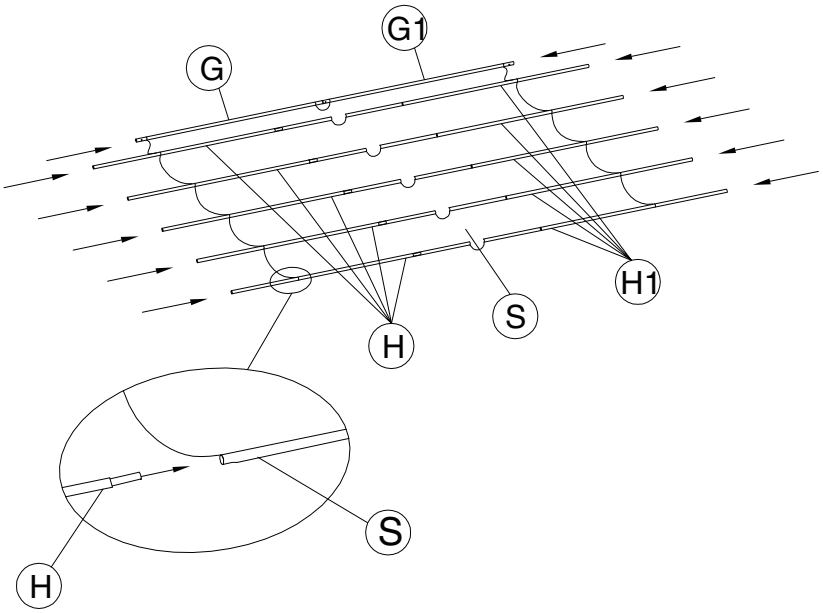

M6x16

J 10X

M6x30

K 3X

S6

Q 1X

Step 11:

Connect G and G1 to B and B1 using bolt K, and secure the canopy with the frames.

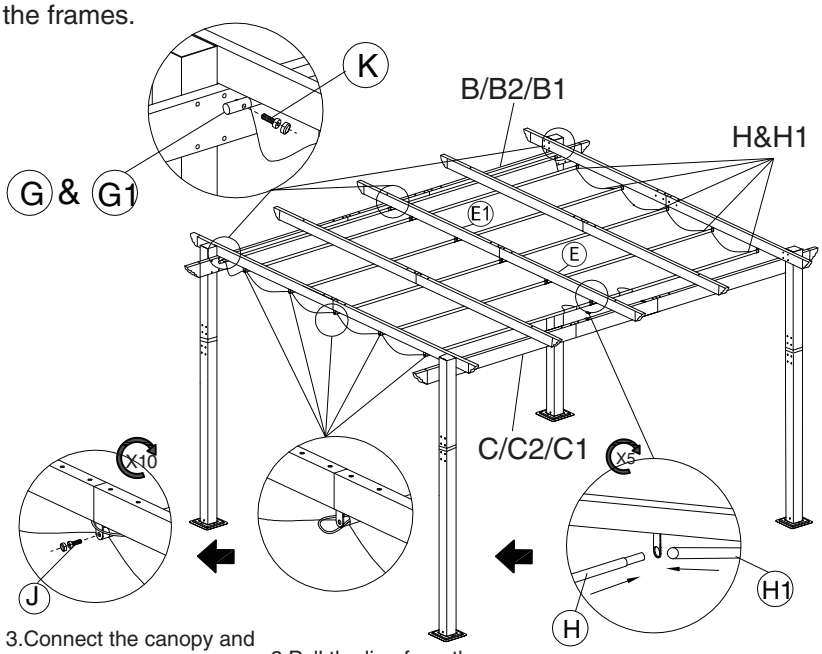

3.Connect the canopy and the Hook using Bolt J

2.Pull the line from the canopy and put on hook to tighten the canopy.

1.Connect H and H1 through the hook

T 1X

Step 12:

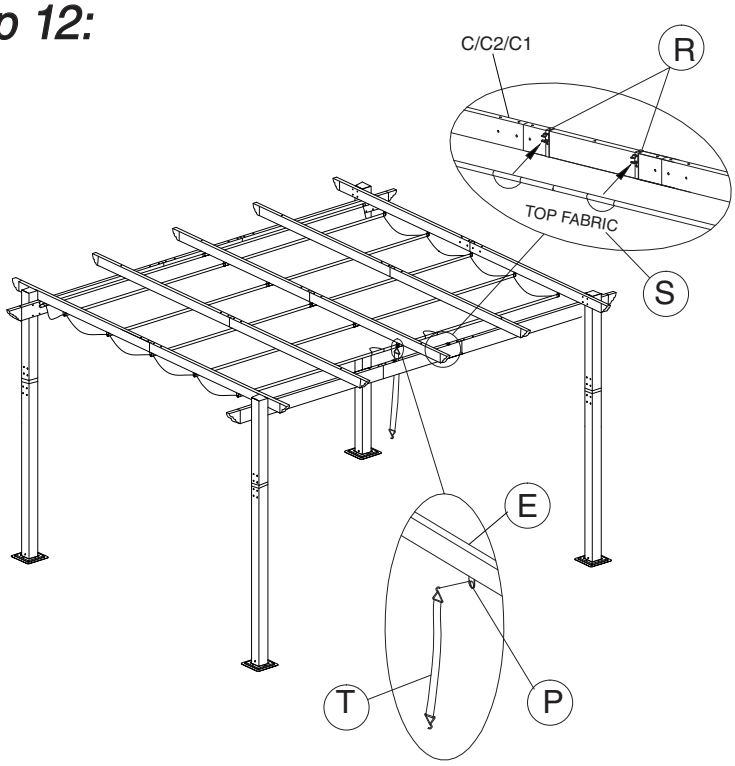

Hang Part T on Hook P

Step 13:

Secure Part T to beam B/B1 to attach the Top Fabric.

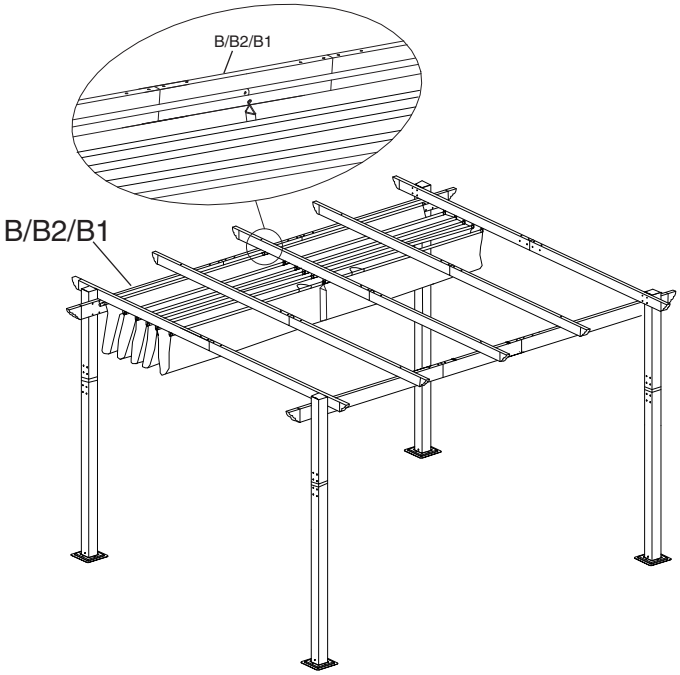

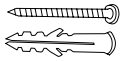

U 16X

Step 14:

Secure Foot I to the ground using Part U.

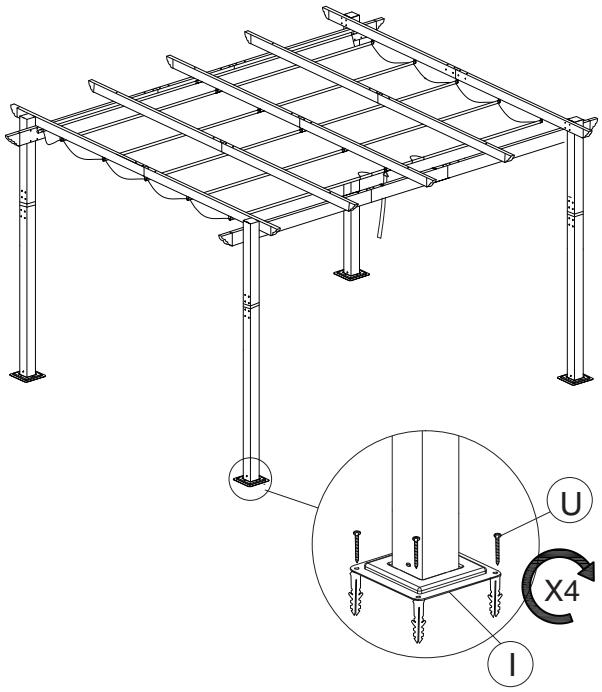

Step 15:

Before use, ensure that all screws are completely tightened.

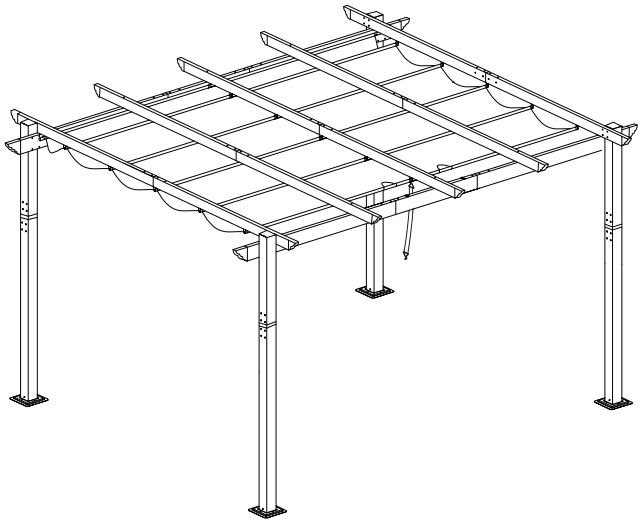

Enjoy Cozy Life!

As expert manufacturer of outdoor furniture, Kozyard remains committed to supporting you with parts and replacements, even beyond your warranty period.
Don't hesitate to contact us directly if you are missing parts or need a replacement.

SUPPORT:
Toll free : 1-866-355-0018
www.kozyard.com
email: support@kozyard.com

SOCIAL MEDIA:
Follow us on Instagram
www.instagram.com/kozyard

KOZYARD LLC

© Copyright 2016 - 2023 Kozyard LLC. | All Rights Reserved.