

Product Diagrams

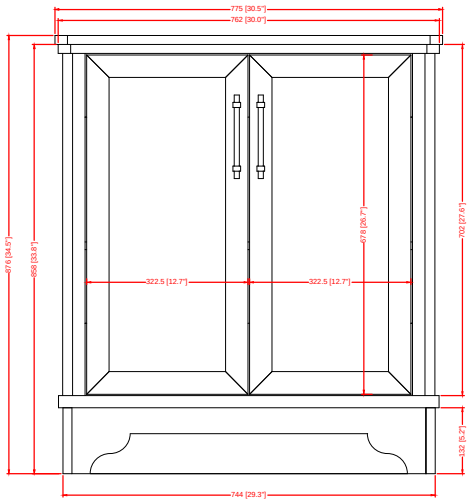

Front

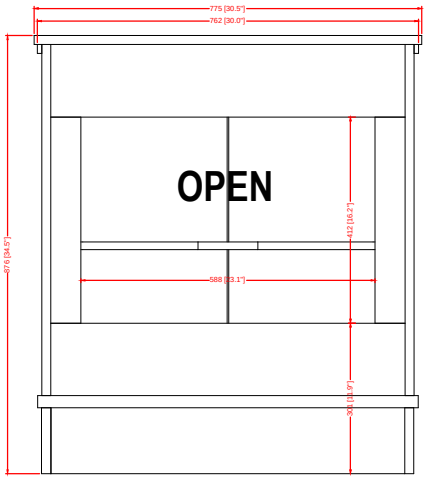

Back

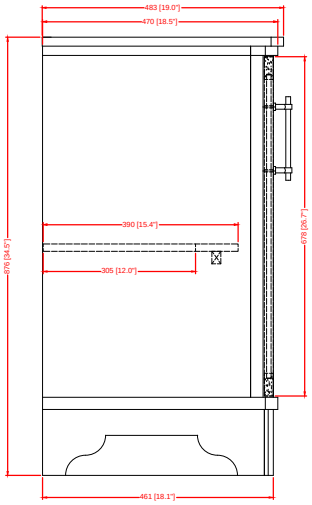

Side

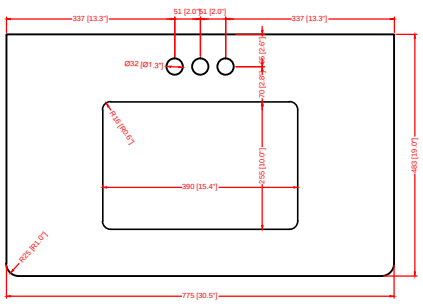

Top