HOME DECORATORS COLLECTION®

NAPLES 24" VANITY

Supplier Model# NATA2418D	
Internet# 203202997	SKU# 1000640160

Tobacco finish

Brushed Nickel hardware

2 full extension dovetail drawers

Soft close door bumpers

Maple coated PVC interior for easy cleaning

Decorative toe kick

Concealed adjustable hinges

Fully assembled

Overall Dimensions: 24" x 18" x 34"H

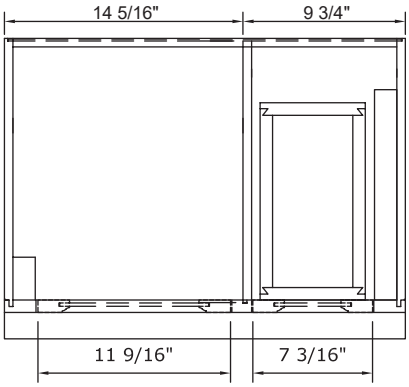

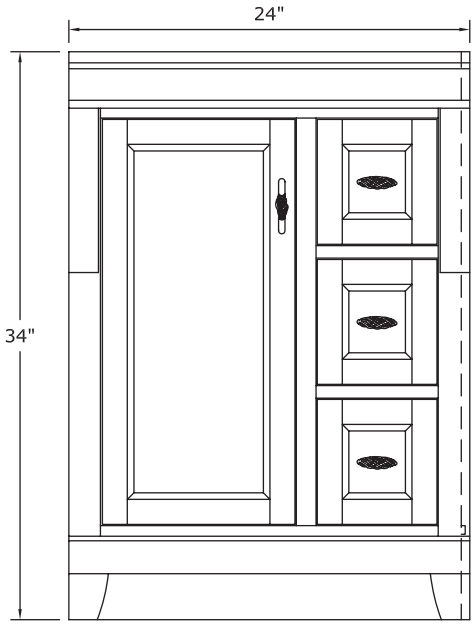

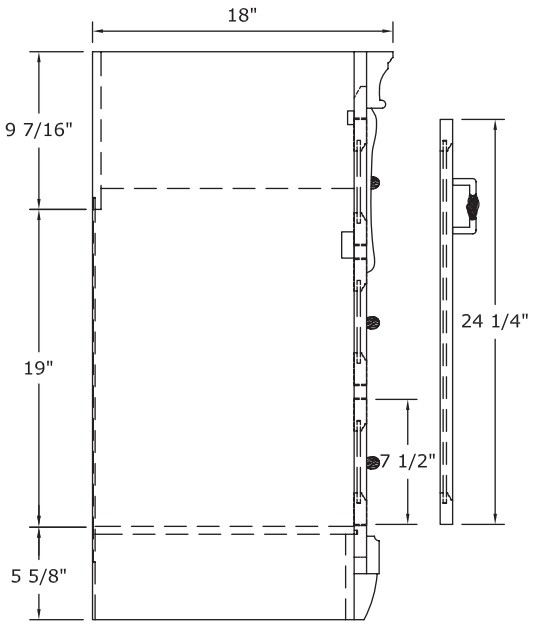

Copyright © 2021 Foremost Groups, Inc. All Rights Reserved. All dimensions are subject to change and variation without notice.