TURBO TUBE

INLINE MIXED FLOW FANS



Standard
Speed Switch
Get two fans
in One!

POWERFUL MIXED FLOW FANS

SOLUTION FOR RESIDENTIAL AND COMMERCIAL VENTILATION



Tel: 888-640-0925
513-348-3853
Fax: 513-268-4597

Sales@ventsus.com
VentsUS.com
400 Murray Rd,
Cincinnati, OH 45217

TT SERIES INLINE MIXED FLOW FANS



TURBO TUBE series fans are ideal solutions for multi-purpose use in residential and commercial ventilation.
TURBO TUBE fans combine the features and benefits of both axial and centrifugal fans.
Used for both supply and exhaust applications that require powerful airflow.

TURBO TUBE fans were engineered to be compact without any loss in performance and are the perfect solution for installation into limited spaces.

ENERGY EFFICIENT TURBO TUBE FANS

BENEFITS

- QUIET OPERATION: **1.1 – 4.5 Sones**
- HIGH PERFORMANCE: **up to 1069 CFM**
- ENERGY EFFICIENT: **24 – 343 W**
- DUCT COMPATIBILITY: **Ø 4", 5", 6", 8", 10", 12 3/8"**
- DOUBLE-SPEED CAPACITOR MOTOR WITH THERMAL OVERLOAD PROTECTION
- BUILT-IN 2-SPEED SWITCH & POWER CORD INCLUDED
- LONG-LIFE BALL BEARING (up to 40 000 hours)
- ROTARY AND REMOVABLE CENTRAL BODY FOR EASY INSTALLATION & MAINTENANCE
- COMPACT SIZE FOR LIMITED SPACES
- LIGHTWEIGHT, DURABLE AND UV RESISTANT PLASTIC CASE (FLAME RATING – 5VA)
- VIBRATION FREE OPERATION
- CORROSION FREE

INNOVATIVE DESIGN

AERODYNAMIC CASE

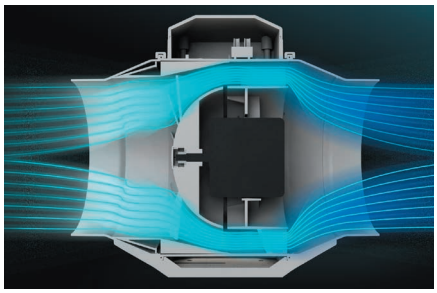

The motor and improved case shape provide high aerodynamic characteristics.

NEWLY DESIGNED IMPELLER



A specifically designed impeller provides smooth movement and powerful airflow.

EASY TO INSTALL & CLEAN



The Removable Body, including motor, impeller and junction box, is the Ultimate Solution for Easy Installation & cleaning.

EASY CONNECTION



The **Removable Body** with the junction box can be **rotated 180º** to **Facilitate Mounting and Wiring**.

BUILT-IN SPEED CONTROL



The **Double-speed Motor** is controlled with a **Built-in Speed Switch**.

INTEGRATED MOUNTING BRACKET



The fan case is **Equipped with a Mounting Plate** to attach the fan to the wall or ceiling.

EASY INSTALLATION



Fix the fan mounting plate on the flat surface.



Install the removable body inside the fan case.



Lock the removable body by clamps with latches.



Secure latches by screws.



Attach the ducts with clamps.



Insert the plug into electrical socket - the fan is READY to GO!



Select a required speed by the built-in speed switch.
ENJOY the FRESH AIR.



Forget about dismantling or disassembling! Just remove the central body from the case and complete the servicing!

Turbo Tube product sheet

DIMENSIONS

Model	Measurements [in.]					lbs
	ØD	ØD1	B	H	L	
TT 100	3 3/4"	5 1/2"	6 9/16"	7 1/2"	9 11/16"	3.7
TT 125	4 13/16"	5 1/2"	6 9/16"	7 1/2"	9 11/16"	3.9
TT 150	5 3/4"	7 11/16"	8 3/4"	9 13/16"	11 5/8"	7
TT 200	7 13/16"	8 1/4"	9 7/16"	10 1/4"	11 5/8"	8.4
TT 250	9 3/4"	10 1/8"	11 5/16"	12 11/16"	15 1/16"	17.3
TT 315	12 3/8"	12 11/16"	14 1/4"	16 1/16"	22 15/16"	25.8

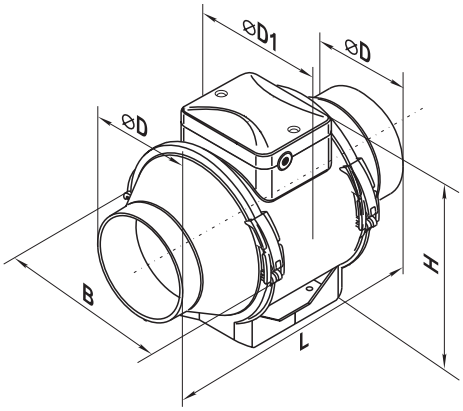

PERFORMANCE

Model	Duct dia	Speed	Sones	RPM*	Watts*	Amps*	CFM vs. Static Pressure (Ps) in WG										Max Ps. in WG	Volts
							0	0.1	0.2	0.3	0.4	0.5	0.6	0.7	0.8	0.9	1	
TT 100	4"	high	2.5	2584	38	0.45	134	120	100**	55	33	20	4	-	-	-	-	0.63	120 V / 60 Hz
		low	1.1	2527	25	0.29	86	68	50**	28	8	0	-	-	-	-	-	0.52	
TT 125	5"	high	2.5	2472	36	0.46	157	140	120**	83	15	-	-	-	-	-	-	0.46	120 V / 60 Hz
		low	1.4	2191	24	0.3	121	91	60**	1	-	-	-	-	-	-	-	0.32	
TT 150	6"	high	3.5	2072	55	0.46	244	230	210**	174	89**	72	59**	45	34	19	4	1	120 V / 60 Hz
		low	1.5	1896	28	0.23	161	135	70**	48	34**	19	0	-	-	-	-	0.6	
TT 200	8"	high	4.5	2049	104	0.87	440	418	400**	352	347**	319	280**	223	172	115	34	1.1	120 V / 60 Hz
		low	2	1552	65	0.54	319	288	260**	231	179**	141	67**	24	-	-	-	0.8	
TT 250	10"	high	4.5	2525	200	1.68	880	870	866	859	850	842	832	821	795	751	708	2.27	120 V / 60 Hz
		low	2.5	1925	130	1.11	655	641	630	610	588	565	531	497	457	397	330	1.54	
TT 315	12 3/8"	high	4.5	2375	343	2.95	1069	1048	1020**	996	955**	915	889**	863	818	768	713	2.6	120 V / 60 Hz
		low	2.5	1856	224	1.89	858	800	780**	745	688**	626	567**	482	397	347	298	1.7	

* The parameters RPM, Watts, Amps are indicated at 0.2 in WG static pressure.
** HVI rated

SPECIFICATIONS

Voltage: 120 V, 60 Hz
Motor: Single-phase asynchronous motor
Duct compatibility: Ø4", 5", 6", 8", 10", 12 3/8"
Airflow capacity: up to 1069 CFM
Sones: 1.1 – 4.5
Power consumption: 24 – 343 W
Suitable for working airstreams up to 140 °F
IPX4 protection
Thermal overload protection
Power cord included
Two year warranty
Built in low/high speed switch