NOVATTO

WHERE STYLE FLOWS

Kitchen Stainless-Steel Sink Guide

P: 844.404.4242 I support@novatto.com I Novatto.com I #WhereStyleFlows

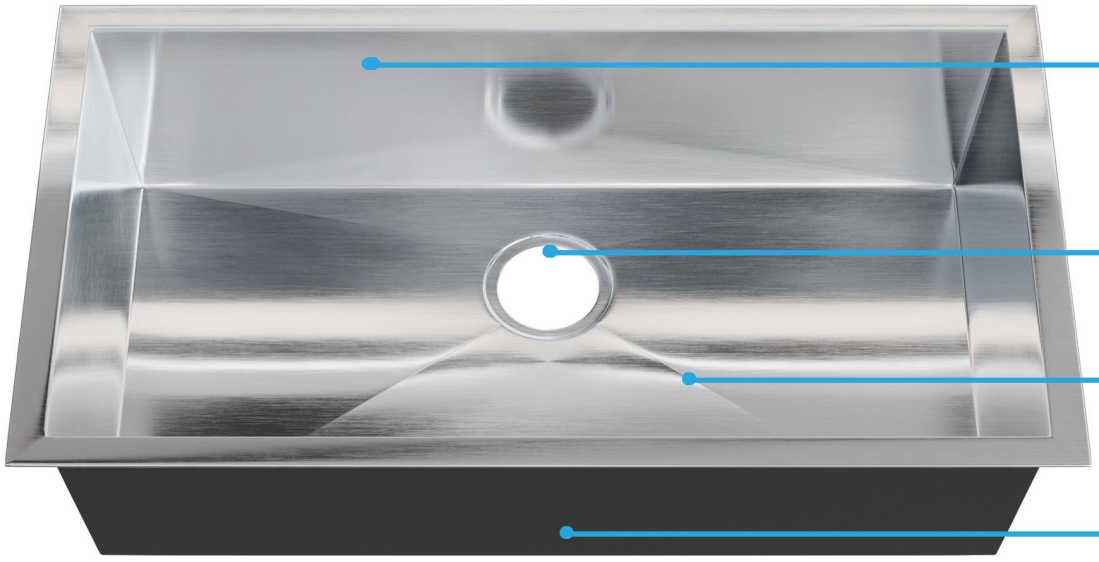

Thickness
18 Gauge

Drain Opening
3.5” Standard

X water guidelines
Water flow - effortless and fast

Installation
Undermount w/ sound-dampening materials

NKSS-SBART04

THANK YOU

We would like to take this opportunity to thank you for choosing Novatto. We hope you are truly satisfied with our product(s) and enjoy it for years to come. As a small business, we learn the most from you, the customer. Please visit the link below to leave us a review and you could win a $25 Amazon or Visa gift card.

It’s easy as...

- Go to novatto.com
- Find your product’s page, scroll 1/2 way down
- On the right, click “Write a review”
- Review, submit and enjoy

NOVATTO
WHERE STYLE FLOWS

Novatto I P: 844.404.4242
support@novatto.com
Novatto.com

STAINLESS-STEEL KITCHEN SINKS 101

Early kitchen sinks, (18th to early 19th century), were shallow, wooden boxes lined with stone or metal. Stainless steel, first developed around 1910 as the 18-8 alloy, revolutionized sinks due to its durability, ease of cleaning and rust resistance. Initially, stainless steel sinks, which appeared in 1936, were small, about 10” long and holding maybe a quart of water! But they quickly replaced tin-lined & copper sinks, even though earlier versions were difficult to produce due to the material’s lack of strength. By the 1940s/50s, the now popular sinks were often integrated into countertops with a “hoodie rim” edging. Over time, thanks to it being scratch and corrosion resistance, plus low maintenance, stainless steel became the standard for kitchen sinks.

With the rise of indoor plumbing, stainless steel sinks have become essential kitchen fixtures, used for washing dishes, food prep, and various household tasks, including chilling your favorite beverage.

TOOLS NEEDED FOR ASSEMBLY (not included)

Specialized tools may be necessary to install Novatto’s undermount or apron front sinks with countertop materials other than wood, marble, or granite.

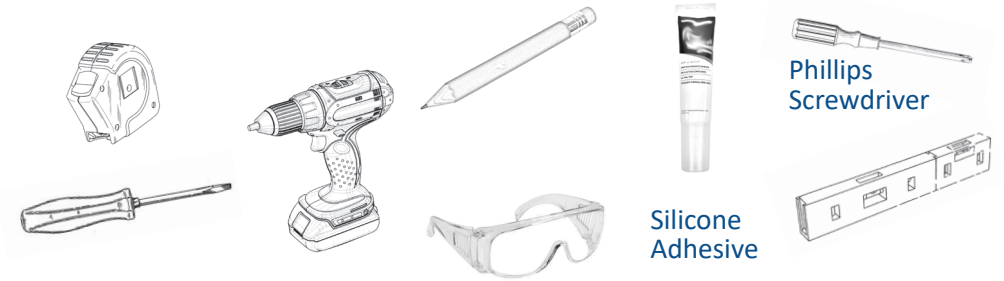

Questions, problems, missing parts? Before returning to your retailer, call our customer service department at 844.404.4242, 8:00 a.m. - 5 p.m., MST, Monday - Friday. Or email us at: support@novatto.com

UNDERMOUNT ASSEMBLY

Steps to Complete Your Undermount Sink Project

- **Determine reveal type:** positive, flush (also known as zero) or a negative reveal.
- **For layout,** you may use the included template or request a .dfx file. Remember to allow clearance for clips, faucet, soap dispenser, etc.
- **Cut countertop** using the template.
- **Before applying silicone** and clips, place the sink under the cut-out to ensure a nice fit.
- **Use ALL mounting clips** provided with the sink. On the underside of the countertop, about 3/4'' or closer, depending on the space available from the edge of sink's flange, mark spots for clip locations at flange corners and every 6'' to 7'' apart around the sink flange. Secure the clips at the marked locations loosely.
- **Clean sink's flange** and countertop where the flange will be mounted with a solvent such as denatured alcohol. Dry thoroughly.
- **Apply silicone** around sink's flange, and position sink accordingly. Make sure it's aligned to the cutout opening. Completely tighten all clips.
- **Carefully** remove any excess silicone and allow it to cure following manufacturer's instructions. After silicone cures, wipe inside edge with denatured alcohol. This will smooth out any rough areas.

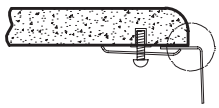

Positive reveal - countertop's edge sits back 1/8" back from the edge of the sink, exposing the sink's rim

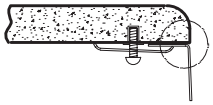

Flushed reveal - counter is flush with edge of sink

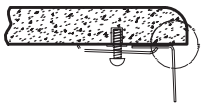

Negative reveal - countertop extends over the edge of the sink 1/8" on all sides. Make sure all accessories such as cutting boards will fit properly.

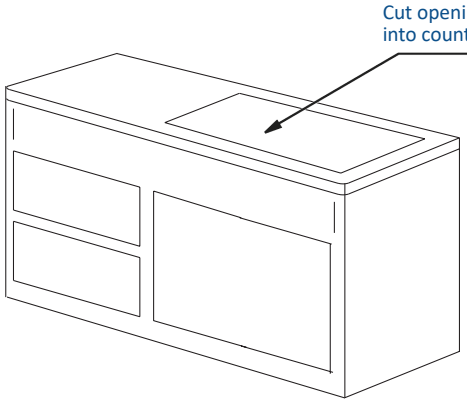

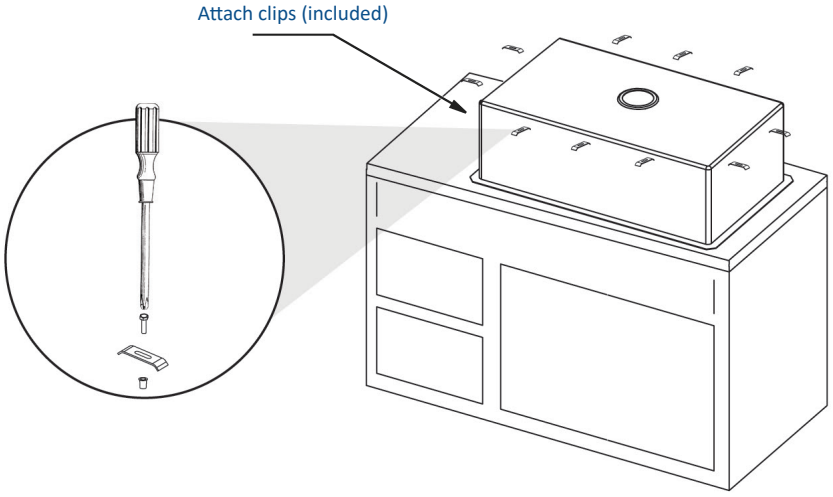

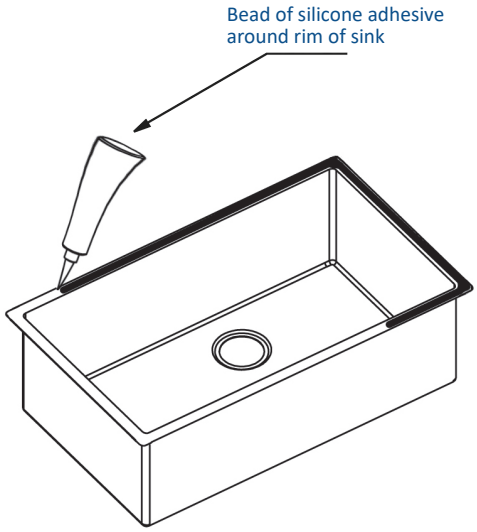

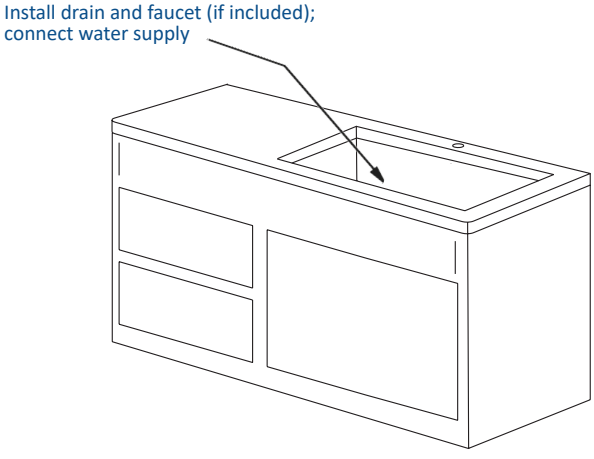

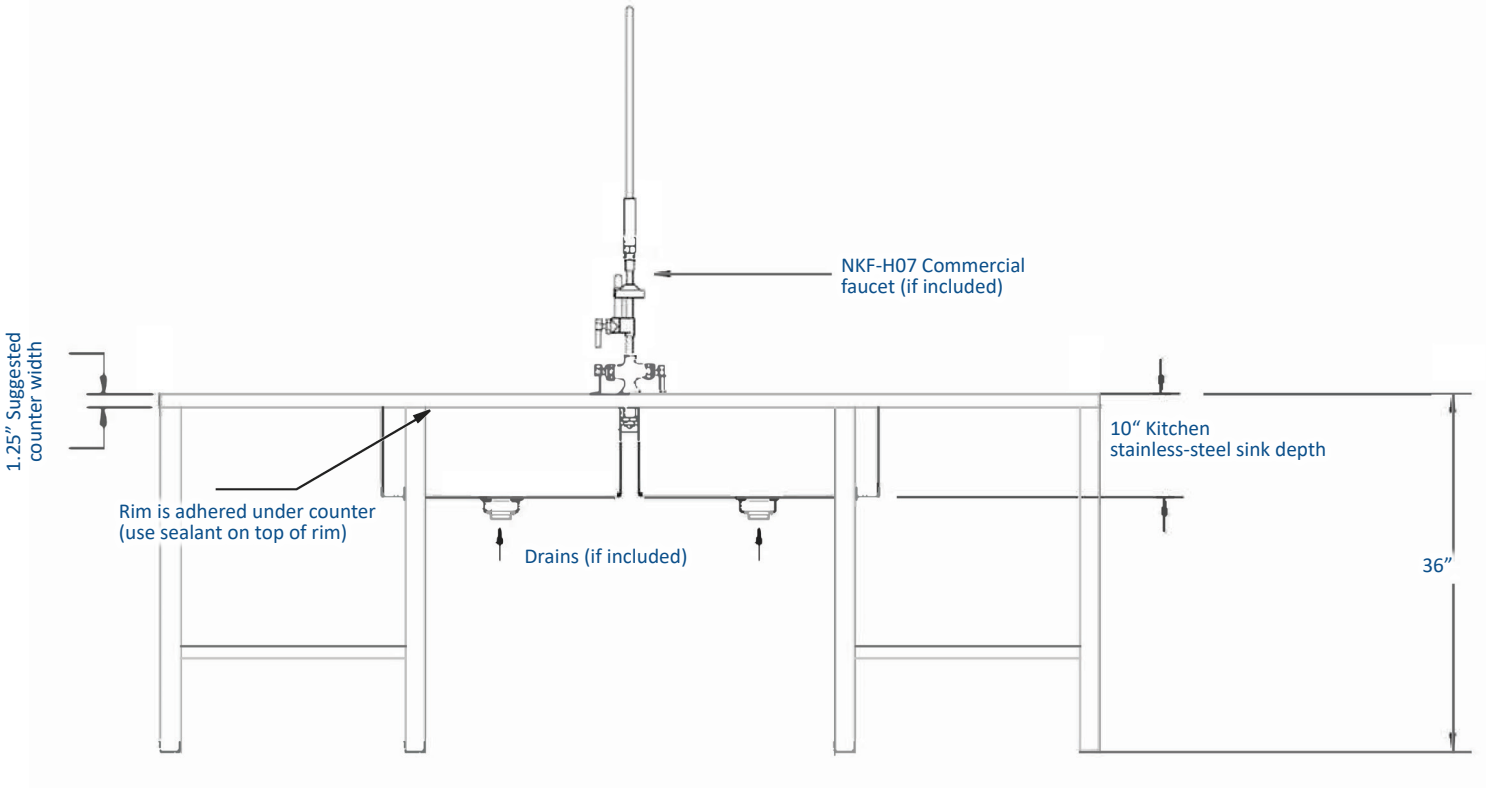

TROUBLESHOOTING TIPS - UNDERMOUNT

Issue	Reason	Solution
Sink seems to be sagging/separating from countertop	Silicon didn’t set long enough before using; mounting clips not used	Reattach, set for 24hrs; add clips or brackets to secure the sink
Does not completely drain	Drain is too high; excess silicone/ putty wasn’t removed causing a dam	Make sure drain flange is below bevel or flushed with sink; remove excess
Finish is changing color or is scratched	Abrasive cleaners, utensils or other factors constantly in contact w/ sink.	Use gentle cleaners, rinse sink often; add grid to bottom for protection

Apron Front & Undermount Sinks - Please Note:

- Review and abide by all building and plumbing codes.
- Novatto sinks need to be installed by a professional.
- Evaluate your current or desired cabinetry. If you are building or remodeling a kitchen from scratch, you will be able to choose cabinets specifically made for farmhouse kitchen sinks. The importance of the cutout is the doors below will be built according to the area needed for the sink chosen.
- Novatto recommends using the cutout template and/or .dxf file for precise cuts.
- Be careful when unpacking the sink, stainless-steel sink edges are sharp and can cause serious injuries. Use gloves and handle sink edges with caution. We advise setting the sink on the packing it came in.
- When cleaning up after installation, DO NOT USE ABRASIVE CLEANERS, as they may damage the finish. Use gentle soap and warm water with a washcloth to clean the surface.

CARE AND MAINTENANCE

To keep your sink looking its best, rinse it thoroughly after each use and wipe it dry with a soft, clean cloth to prevent water spots and mineral buildup. Regular cleaning is essential, so aim to clean your sink at least once a week. When doing so, always use non-abrasive cleaners and tools such as soft cloths or sponges with a stainless-steel cleaner. Avoid using steel wool, wire brushes, or abrasive pads, as these can scratch and damage the surface. Additionally, when applying cleaner, work in the direction of the sink’s grain to maintain its finish.

For stubborn hard water stains, vinegar is an effective cleaning solution. Coating the sink with distilled white vinegar after scrubbing can help eliminate mineral deposits. Baking soda is another excellent option for cleaning, as it acts as a mild abrasive that removes stains without scratching. To protect your sink further, avoid letting bleach sit on its surface, as it can harm the finish over time.

Using sink accessories such as bottom racks and rinse baskets can help shield the sink from scratches and dents. To maintain a sanitary surface, incorporate natural antibacterial products like baking soda, white vinegar, lemon juice, or dish soap into your cleaning routine. These solutions not only disinfect but also keep your sink fresh and clean. With proper care and attention, your sink will remain spotless and durable for years to come.

APRON FRONT ASSEMBLY

Steps to Complete Your Apron Front Sink Project

- **For layout,** use the provided template and allow for faucet, handle(s), backsplash and accessories. Use the template or .dxf file as the guide for the cut-out. Keep in mind the choosen edge reveal before cutting. Depending on the installation reveal type, make the proper cut-out in the countertop.
- **Create a custom support** using 2 x 4's which will adequately hold the weight of the sink from underneath.
- **Place the sink** on top of cabinet or into the cabinet front cut-out. Apply silicone as a gasket between sink and cabinet.
- **Make sure sink** is leveled from front to back as well as side to side.
- **Apply a bead** of silicone around top edge of sink. Make sure countertop is centered properly and place accordingly. Remove any excess silicone from any surfaces.
- **Install the drain (if included)** according to the drain's installation instructions.

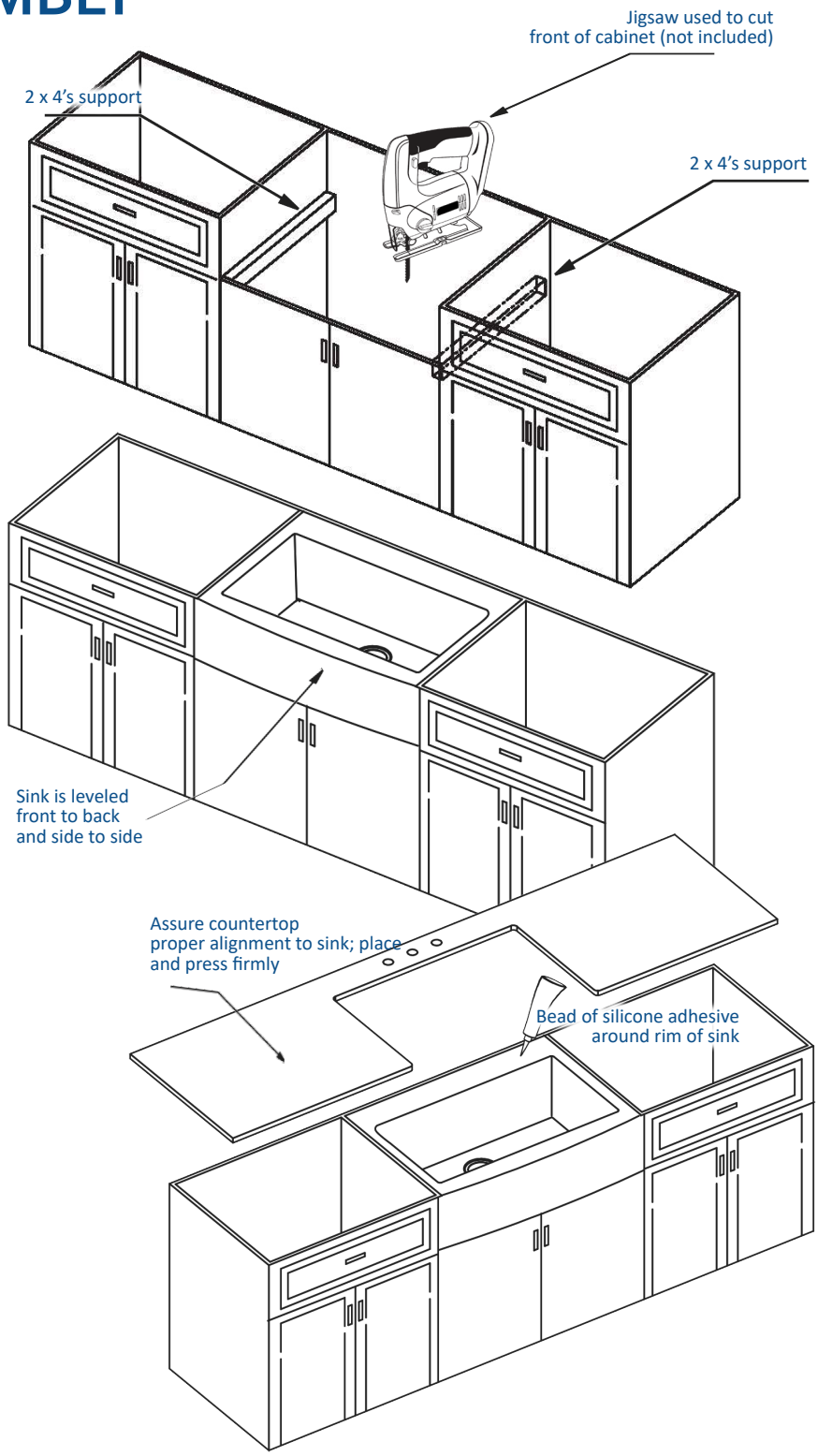

Apron Front Models:
NKSS-SBFARM, NKSS-DBFARM

TROUBLESHOOTING TIPS - APRON FRONT

Issue	Reason	Solution
Finish is changing color or is scratched	Abrasive cleaners, utensils or other factors constantly in contact with sink	Use gentle cleaners, rinse sink often; add grid to bottom for protection
There is a gap on the side	Sink wasn't installed level	Make sure your professional installer levels the sink perfectly
Sink seems to be sagging from countertop	Proper sink supports were not used	2 x 4's need to be built into the cabinet to support the weight

WARRANTY

The sinks are warranted to original retail purchaser to be free from defects in material and workmanship for a period of ONE (1) year from the date of purchase as shown on the purchaser's receipt when properly installed by a qualified, licensed plumber. This warranty is limited to defective parts only. Labor charges and/or improper installation, repair or replacements, as well as incidental and consequential damages connected therewith are excluded. Any damage to this sink as a result of misuse, abuse, neglect, accident or improper installation, or any use not consistent with the instructions, will void this warranty. This warranty excludes all industrial and commercial usage.

Under no circumstance will Novatto or Novatto Inc. be held responsible for any damage as a result during or after product installation. We will not be responsible for any labor or installation charges, or any other expenses associated with a defective product. Novatto's only responsibility is the replacement, or exchange of a defective product.

If you believe you have a warranty claim, contact Novatto, either through your local Dealer, Plumbing Contractor, Home Center, or by writing: Novatto, Inc., Attn.: Product Support, 3533 E. Corona Ave., Phoenix, AZ, 85040, USA. Please be sure to provide all pertinent information regarding your claim, including a complete description of the problem, the product, model number, color, finish, the date the product was purchased and from whom the product was purchased. Also include your original invoice. For other information, or to obtain the name and address of the service and repair facility nearest you, email: support@novatto.com or write to the above address.

Get the most out of your Novatto sink by registering!

By registering, you verify Novatto product's warranty. Plus you will receive helpful tips and product information, learn of special events and much more.

Stainless steel kitchen sinks have a tolerance level, which means during the manufacturing process, they have an acceptable variation in dimensions with a common tolerance level being around 1/32". Therefore the sink's measurements can deviate slightly from the stated dimensions, but not exceeding that tolerance level. To be sure Novatto's product fits perfectly in your home; we recommend purchasing the product first and then fabricate accordingly.

Need more help?
Feel free to contact our technical support anytime at 844.404.4242 or email us at: productsupport@novatto.com. More information is also available at: www.novatto.com.

FAQs

How do I keep my stainless steel sink from becoming stained and colored?

The finish is not waxed or sealed so remember, stainless steel will react to how it is used and its surrounding environment. It may become stained if it comes into contact with certain chemicals, such as those found in certain foods, cleaning agents or beverages. When left in the sink for an extended period, these chemicals can react with the your stainless-steel sink and cause stains or discoloration.

Are there clips included with my sink?

Yes. Novatto provides the sink clips and it is recommended you use all of them to secure your sink to the counter.

My sink is showing scratches!

To prevent scratches use sink accessories such as bottom racks and rinse baskets to help shield the sink from scratches and dents. Also, when applying cleaner, work with the grain of the sink, not across it.

To remove scratches, you can use a paste made from baking soda and water, apply it to the scratched area with a soft cloth, gently rub in the direction of the grain, rinse, and dry. For deeper scratches, consider using a dedicated stainless steel scratch removal products such as a fine-grit wet sandpaper, or a rubbing compound; remembering to always follow the grain's direction to avoid further damage.

What is the gauge of my sink?

All of Novatto's kitchen stainless-steel sinks are made from 304 18/8 chromium-nickel content with a 16 or 18 gauge thickness.

Sink Gauge Comparison Chart

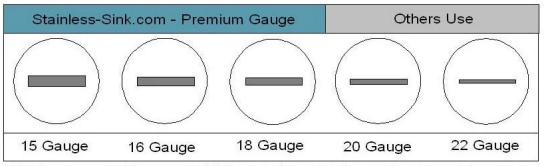

Graph represents differences in thickness between the five most common sink gauges.