KingChii	▲ 型号/SKU	▲ 产品名称	▲ 包装尺寸	▲ 材质&工艺	2023/3/17
	Mode1:HWPG456B	小号木颗粒烤炉	143 x 210mm	157g铜版纸-哑膜-骑马钉+虚线压痕	

KingChii

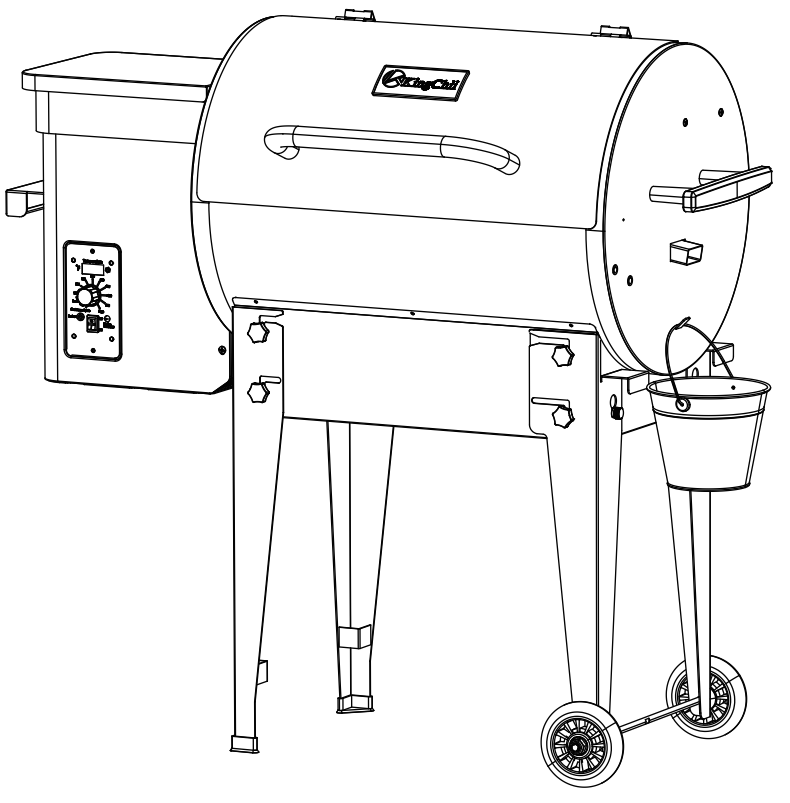

Model: HWPG 456B

Wood Pellet Grill

User Manual

MADE IN CHINA

CONTENTS

Thanks For Purchasing ---------- 01

Important Safety Instructions ---------- 01

Package Contents ---------- 02

Installation Instructions---------- 04

Using Instructions ---------- 06

Product Maintenance ---------- 14

After-sales Service ---------- 22

01 THANKS FOR PURCHASING

Thank You For Choosing Our Grill

Since there are many uncertain factors during the transportation of the package, please check whether the product packaging is complete and whether the product components are complete before use.

If the product is damaged, please contact our customer service staff immediately and we will deal with it for you immediately.

02 IMPORTANT SAFETY INSTRUCTIONS

HAZARD OF ELECTRICALSHOCK OR BURN TURN OFF POWER BEFORE SERVING

Please read and follow the below WARNING and DANGER information:

1) Hazardous voltage is present which can shock, burn or cause death. Turn off the power and unplug your product when not in use.
2) Never use or store flammable liquids near your product.
3) Never use gasoline or lighter fluid to manually light your product .
4) Assembly and operation your product in accordance with the instructions in this Product's Manual.
5) Product designed for outdoor use only.
6) Never use heating fuel pellets in your product, due to potentially hazardous contaminants and additives they may contain.
7) Always store hardwood pellets in a dry place. Keep away from heat-producing appliances or containers with other fuels.
8) How to clean -- see product maintenance instructions in this Product Manual.
9) To operate your product from a 110~120V AC battery system.
10) This electrical appliance is not intended to be used by minors, or persons with lack of knowledge and experience.
11) Minors should be supervised and instructed by adults before use.
12) If the power cord is not working or damaged, it must be repaired or replaced by the manufacturer, its service agent or qualified person in order to avoid hazard.

03 PACKAGE CONTENTS

THROUGHOUT THIS MANUAL, THE NUMBERS OF PARTS REFER TO THE BELOW PARTS DIAGRAM

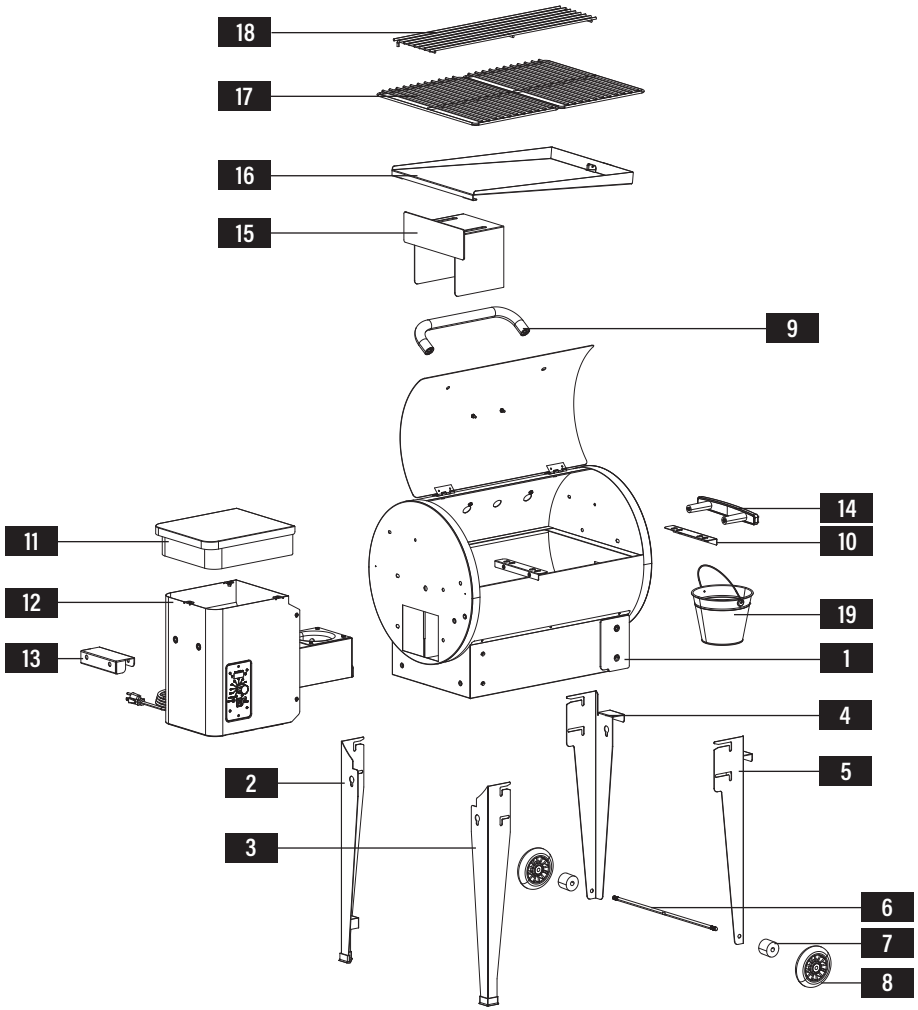

Product Parts Diagram

• Product Components

No.	Description	Qty	No.	Description	Qty
1	Grill body assembly	1	11	Extendable hopper part	1
2	Left rear leg	1	12	Pellet hopper	1
3	Left front leg	1	13	Hopper handle	1
4	Right rear leg	1	14	Side handle	1
5	Right front leg	1	15	Heat baffle	1
6	Axle rod	1	16	Grease drain pan	1
7	Axle sleeve	2	17	Porcelain grill grate	2
8	Wheel	2	18	Warming reck	1
9	Lid handle	1	19	Grease bucket	1
10	Warming reck support	2			

• Hardware List

AA. 1/4*20 knob (8 piece)
BB. 5/32*12 bolt (7 piece)
CC. 1/4*15 bolt (6 piece)
DD. 1/4*15 square neck bolt (4 piece)
EE. M8 locknut (2 piece)
FF. 1/4*19 thumb screw (4 piece)
GG. 7*20 washer (4 piece) (4 piece)

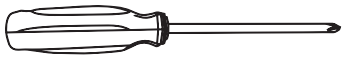

TOOL NEEDED:
Phillips head screwdriver

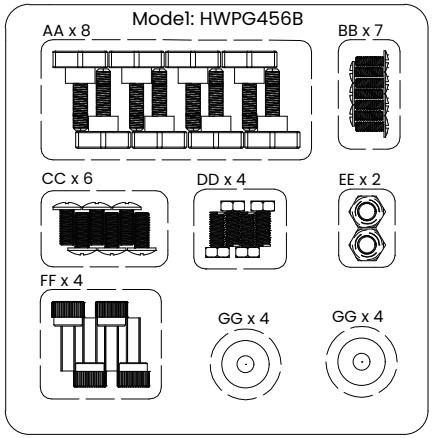

04 INSTALLATION INSTRUCTIONS

You can refer text instruction to install the product.

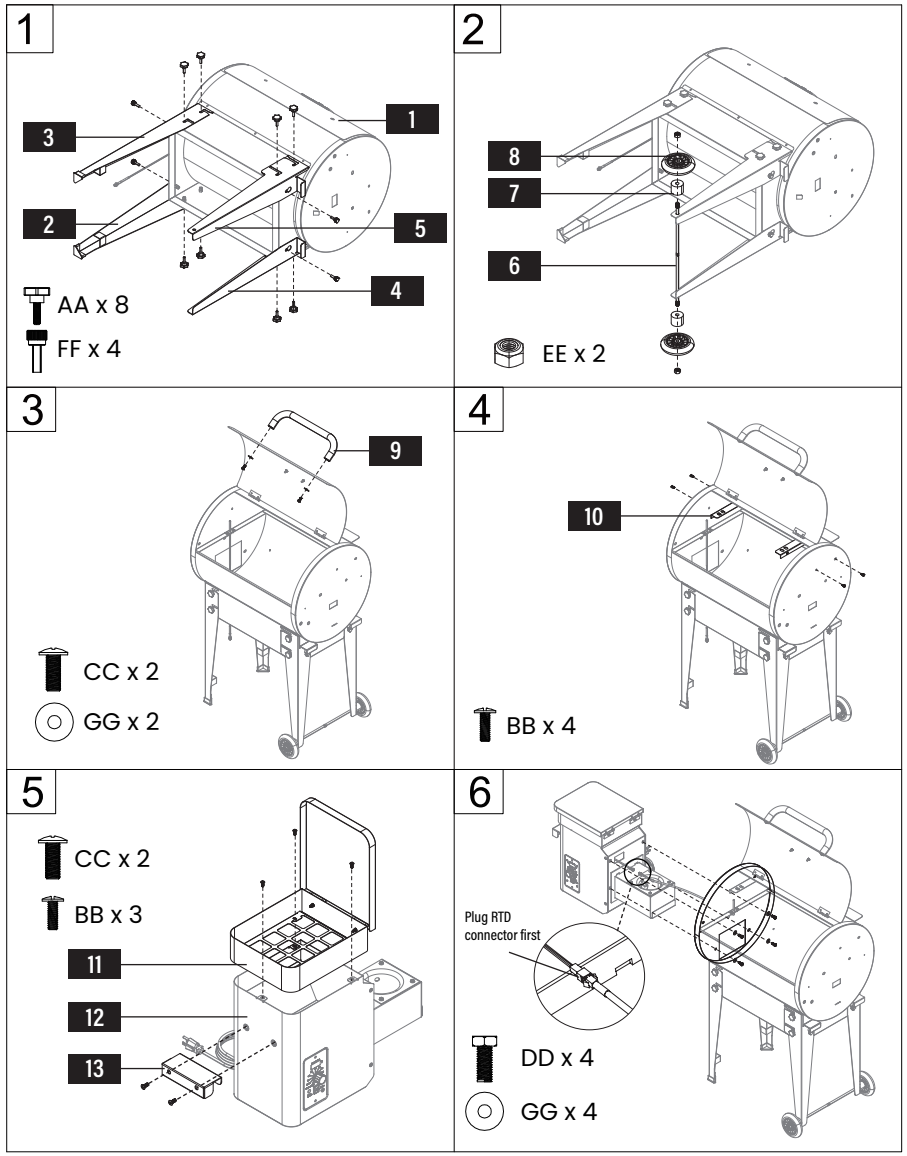

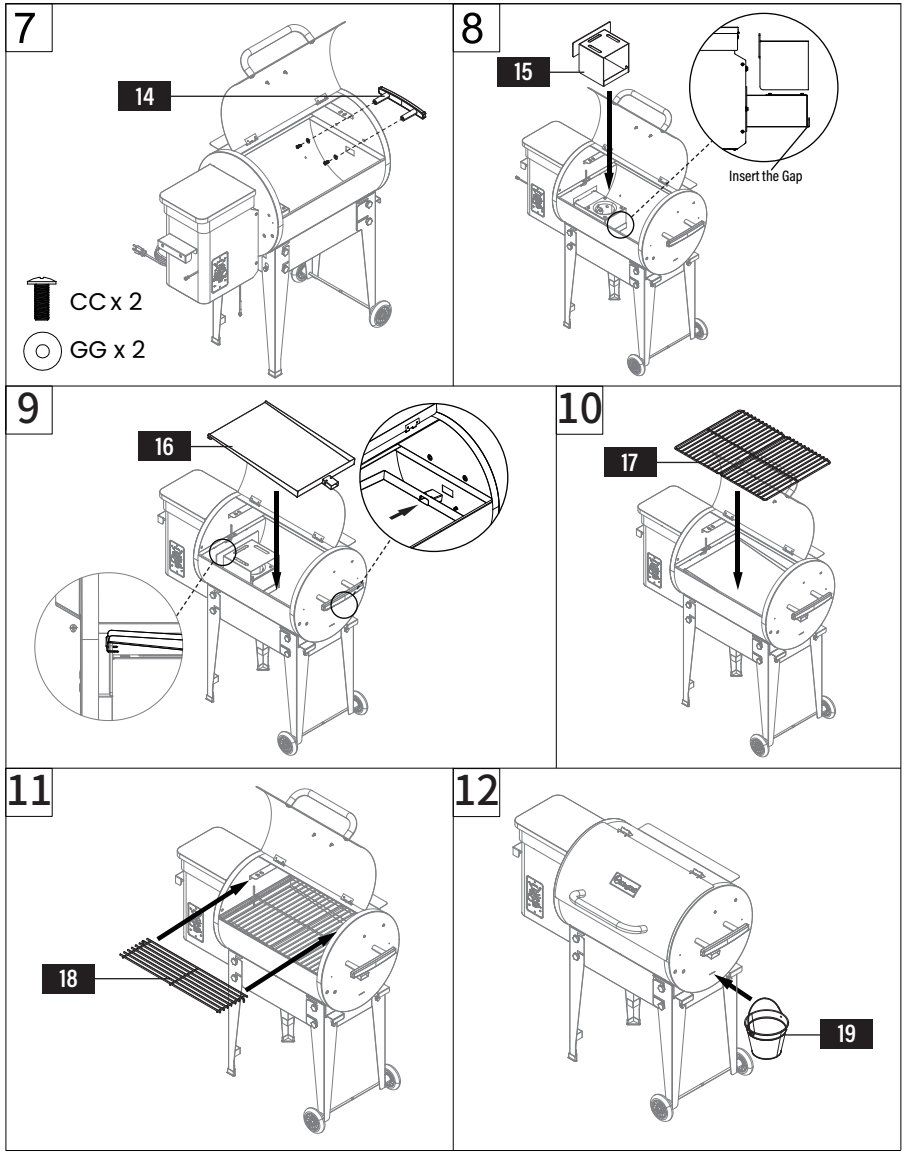

05 USING INSTRUCTIONS

START TO USE YOUR NEW GRILL

INITIAL START UP INSTRUCTIONS

To be used on initial firing or anytime the Grill runs out of Pellets.

In order to ensure proper operation of the Grill, you must first allow the Auger Tube to be “charged” with Pellets.

1) Open the Lid and remove the Porcelain Grills, Grease Drain Pan and Heat Baffle from inside the Grill.
2) Make sure the Switch is in the “OFF” position. Plug the Power Cord into an appropriate, grounded electrical outlet.
3) Open the Pellet Hopper Lid and locate the Auger. Make sure there are no foreign objects in the Auger Turn the Switch “ON” and the Temperature/dial to smoke look into the Pellet Hopper to confirm the Auger is turning.
   At the same time, place your fingers over the brazier and feel the air movement from the Draft Inducer Fan. Look to see if the Hot Rod is getting hot (it will start to turn red).
   CAUTION! Do not touch it. Turn the Temperature/dial to “SHUT DOWN CYCLE”.
4) Add barbecued wood pellet fuel to the hopper. Never use heating fuel pellets in the Grill. Turn the Temperature/Dial to HIGH.
   Note: During the initial charging of the Auger, it will take time for the Pellets to travel from the Pellet Hopper to the brazier. When the Pellets begin to fall into the brazier, turn the Temperature/Dial to “Shut Down Cycle”.
5) Set the Temperature/Dial to “SMOKE”. Let the Pellets come to full flame. Once you see flames come out of the brazier, turn the Temperature/Dial to “SHUT DOWN CYCLE”, and let the Grill cool down.

6) For ease of clean-up, you should wrap the Grease Drain Pan with heavy-duty aluminum foil. Be sure the edges and ends of the foil are tight against the bottom of the Grease Drain Pan. Position the Heat Baffle, The foil lined Grease Drain Pan and Porcelain Grate in their proper locations.
7) With the Lid open set the Temperature/Dial to "SMOKE". In approximately 2 minutes you will notice whitish-gray smoke coming out of the Grill as the Pellets ignite. After assuring the Pellets have ignited, close the Lid and set the Temperature/Dial to any cooking setting desired.
8) Note: Before cooking the first batch of food in your new Grill, you will need to warm up the Grill. Turn the Temperature/Dial to "HIGH" and run for 45 minutes at this setting with the Lid closed. This must be done before cooking any food on the Grill.
9) The Grill should be allowed to preheat for approximately 10 minutes with the Lid closed before placing food in the grill.

ALWAYS START THE GRILL ON SMOKE SETTING WITH THE LID OPEN

Once the Pellets are ignited, close the Lid and set the Temperature Dial to any cooking temperature desired.

Subsequent Start-up

With the Lid open, turn the Switch "ON" and the Temperature/Dial to SMOKE.

In approximately 2 minutes you will notice whitish-gray smoke coming out of the Grill as the Pellets ignite. After assuring the Pellets have ignited, close the Lid and set the Temperature/Dial to any cooking setting desired. The Grill should be allowed to preheat for approximately 10 minutes with the Lid closed before placing food in the Grill.

WARNING! If at any time, the Grill fails to light or the fire in the brazier goes out while cooking or smoking, when sufficient pellets are still in the Pellet Hopper, it is important to follow these steps. Failure to do so may cause a hazardous "over-firing" of your grill due to an excess of unburned pellets in the brazier.

1) Turn the Switch "OFF" and disconnect the Power Cord. If the Grill is still hot, allow it to completely cool. Open the Lid and remove all food, the Porcelain Grate, Grease Drain Pan and the Heat Baffle.
2) Remove all unburned pellets and ash from inside and around the brazier.
3) Before relocating the Heat Baffle, Grease Drain Pan and the Porcelain Grate, plug the power Cord into an appropriate, grounded electrical outlet and restart the Grill. Pellets should fall into the brazier and the Hot Rod should begin to heat (it will start to turn red).
   CAUTION! Do not touch it.
4) If this procedure is successful, you will soon see flames come out of the brazier. Then turn the Switch "OFF" , and let the Grill cool down. Position the Heat Baffle, the Grease Drain Pan and Porcelain Grill in their proper locations. With the Lid open, turn the Switch "ON" and the Temperature/Dial to "SMOKE".

In approximately 2 minutes you will notice whitish-gray smoke coming out of the Grill as the Pellets ignite. After assuring the Pellets have ignited, close the Lid and set the temperature/Dial to any cooking setting desired.

Use Folding Leg

The legs on the product can be folded down for storage and for easier transport.

⚠ **WARNING!** Do not cook on a flammable surface with the legs folded down.

The product maximum temperature can make surfaces discolor or warp because of heat transfer on the bottom of the grill. We recommend that you remove the Porcelain grill, Drain pan, and the heat baffle to avoid scratching the interior of the grill during the leg folding process.

Here are the steps to fold down the legs:

1. Loosen all the knurled and knob screws for all 4 legs.
2. Lift the right side of the grill removing the weight on the right legs. Pull the right front leg down until it stops then pull to the leg to the right until it stops. Do the same on the back right leg.
   Then temporarily tighten the lower knob screw on both right legs to secure the leg from moving. Set the grill back down on the ground. (See Figure 5-1 and 5-2).
3. Lift up the left side of the grill by the handle on the hopper. Pull the front leg down until it stops (See figure 5-3) then pull the front leg to the left until it stops. (See figure 5-4).
   Then, pivot the front leg until the leg comes into contact with the bottom of the grill skirt.
   Then tighten the bolts so they do not fall out. (See figure 5-5) Repeat the process on the back left leg. Set the grill down on the ground onto the hopper edge.
4. Lift the right side of the grill removing weight off the legs. Then loosen the lower knob screw on both right back and front legs. Then pivot the front right leg until it comes in contact with the folded down legs. Then tighten the knob screw to secure. Then fold up the back right leg until it comes in contact with the folded down legs. (See figure 5-6).
   Then tighten the thumb screw to secure. Then tighten the entire remaining knob and knurled screws so they will not come out.
5. Reverse the process to fold up the legs.

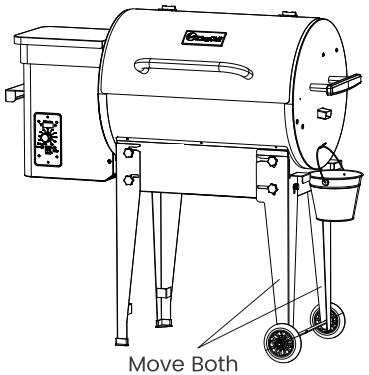

F5-1

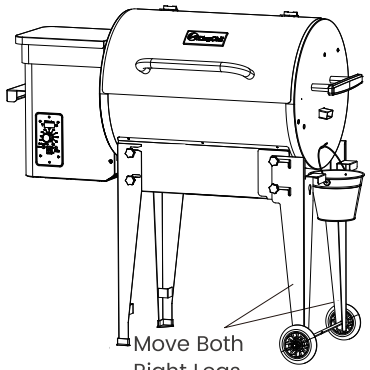

F5-2

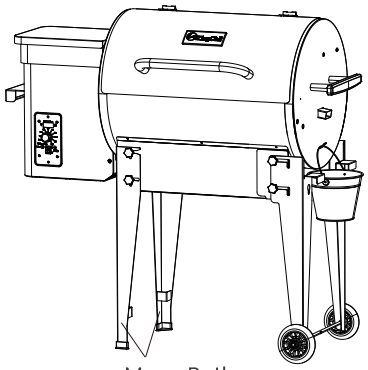

F5-3

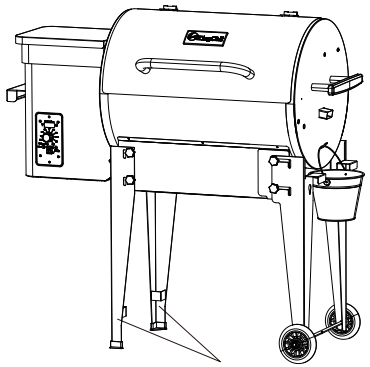

F5-4

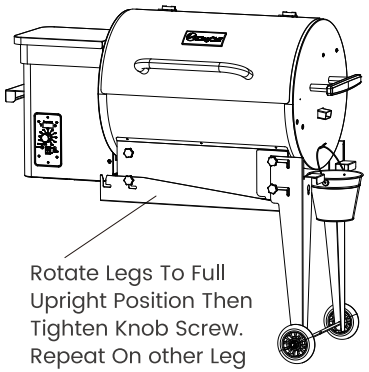

F5-5

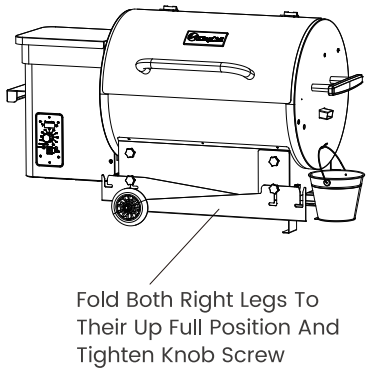

F5-6

Control Shutdown cycle

The control for this barbecue comes with an automatic shut down cycle. When finished cooking on your barbecue set the Temperature/Dial Knob to the Shutdown Cycle position, this will leave the Draft Induction Fan running for ten minutes to burn any excess pellets in the brazier. After the fan runs for ten minutes the controller will power off and the fan and it will stop running.

CAUTION! The main power switch will shut the power off to the controller and the Temperature/Dial Knob switch will cut off power to the grill components only.

When servicing the controller or any parts ensure that the power supply is disconnected to avoid a shock hazard.

Operating Tips

1) The Temperature Dial can be changed at any time to increase or decrease the cooking temperature of the Grill. The HIGH temperature settings are for Grilling. The MEDIUM/MID RANGE temperature settings are for Slow Cooking.
   The SMOKE setting is for Smoking and adding Smoke Flavor to foods being cooked. The SMOKE setting can also be used to “hold” foods at approximately 180 to 200 degrees F.

2) WARNING! Your Pellet Grill should never be moved while it is hot. If you are transporting your Grill in a vehicle after cooking on it, make sure the fire is completely out and the Grill is cold before placing it in any vehicle.
   Never put water into the brazier. It will jam the Auger.
3) Your Pellet Grill is designed to operate with the Lid losed. Cooking with the Lid open greatly lengthens your cooking time.
4) DANGER! Never add pellets by hand to a hot brazier. This is dangerous and you may be seriously burned. If you run out of pellets and lose your fire while cooking, let the Grill completely cool and start again with the INITIAL FIRING INSTRUCTIONS.
5) CAUTION! Make sure the Heat Baffle is properly seated on its locating brackets. The long lips of the Heat Baffle should be pointing down over the brazier. If not seated properly, direct heat and flame could come up out of the brazier and cause a grease fire in the Grill.
6) When estimating cooking times, the outside temperature will be an important factor. If it is hot outside, it will take less time for food to cook.
   If it is cold, wet or windy, it will take longer
7) Digital Thermostat Control Functions:
   After selecting your cooking temperature (with the exception of “SMOKE”) the Auger will operate continuously until the selected temperature is reached.
   From that point forward, the Digital Control will cycle the Auger off and on to maintain the selected temperature until the Temperature/Dial is changed.
   When operating in “Smoke” mode, the Auger will cycle on for 15 seconds and off for 65 seconds. There is no temperature control with the “Smoke” setting. This timed cycle setting for “Smoke” is a factory preset recommended by us to develop a “Smoking” temperature of 150 to 180 degrees ℉.

The "PROBE TEMP" Button is used as a Temperature Switch Control to change the temperature readout on the LCD Screen. Press and hold the button for two seconds to switch to grill temperature or to PROBE TEMP, as preferred. Default is set to Fahrenheit.

The plug-in connection ports on the front of the Control Board are for a Meat Probe(s). When a meat probe is connected, the temperature is displayed on the LCD Screen. When not in use, disconnect the meat probe from the connection port. Additional meat probe(s) sold separately.

8) CAUTION! Grease fires are caused by not properly maintaining the Grill by failing to clean your Grease Drain Pan, and Grease and Grease Drain Tube on a consistent basis. In the unlikely event of a grease fire while cooking, turn the Switch "OFF" and Keep the Lid closed until the fire is completely out. Never keep the Lid open during a grease fire. If it does not go out, lightly sprinkle baking soda on the fire.

CAUTION! Be careful not to burn yourself. If this does not work then carefully remove the food from the Grill and keep the Lid closed until the fire is completely out. Again, be careful not to burn yourself. When the Grill is completely cool, remove the Porcelain Grate and replace the foil on the Grease Drain Pan. Clean any grease accumulation from the Grease Drain Tube. Replace the Grease Drain Pan and the Porcelain Grate in their proper positions restart the Grill and resume cooking.

06 PRODUCT MAINTENANCE

UNDERSTANDING THE PROBES

1) TEMPERATURE PROBE

Located inside the main barrel, on the left side wall, is the temperature probe. It is a small, vertical piece of stainless steel. The temperature probe measures the internal temperature of the unit. When the temperature is adjusted on the Control Board, the temperature probe will read the actual temperature inside the unit and adjust to the desired temperature.

IMPORTANT! The temperature of your unit is highly affected by ambient outdoor weather, quality of pellets used, flavor of pellets, and the quantity of food being cooked.

2) MEAT PROBE

Compatible with PT1000 meat probes only.

The meat probe measures the internal temperature of your meat in the grill, similar to your indoor oven. Plug-in the meat probe adapter to the meat probe connection port on the Control Board and insert the stainless steel meat probe into the thickest portion of your meat and the temperature will be displayed on the control board. To ensure the meat probe is connected properly to the connection port, feel and hear it snap into place.

NOTE: When placing the meat probe into your meat, ensure the meat probe and meat probe wires avoid direct contact with flame or excess heat. This can result in damage to your meat probe. Run the excess wire out the hole located on the left side of the main grill or the top of the main grill (near the grill lid hinge). When not in use, disconnect from the meat probe connection port and place aside to keep protected and clean.

Maintaining Your Grill

1) CREOSOTE AND GREASE: Formation and need for removal.

The flue exhaust should be inspected at least twice a year to determine when a creosote or grease buildup has occurred.

Also, grease drippings from the food will fall onto the Grease Drain Pan and then out of the Grill through the Grease Drain Tube, to be collected in the Grease Cup. Grease will accumulate in all of these locations.

The Grease Drain Pan, the Grease Drain Tube and the Grease Cup should be inspected at least twice a year for signs of grease build-up.

When creosote or grease has accumulated, it should be removed to reduce the risk of fire

Cleaning Grease from your Grill:

DANGER! Turn the Switch OFF (o) and disconnect the Power Cord.

CAUTION! Accumulated grease is easier to clean off when the Grill is still warm but not hot.

Be careful not to burn yourself. Gloves are recommended. Periodically, clean the grease out of the Drain Pan Assembly and Grease Drain Tube. If too much grease is allowed to build up in the Grease Drain Tube, or is allowed to plug the Grease Drain Tube, a grease fire could result.

We recommend cleaning these locations regularly.

Remove the Porcelain Grates and the Grease Drain Pan and the Heat Baffle. Wipe up any remaining grease residue inside the Grill Frame with paper towels or disposable rags.

Paper towels or disposable rags can also be used to wipe some of the grease off of the interior surfaces of the Grill.

Wrap your Grease Cup with aluminum foil for easy clean-up. Empty it occasionally, depending on amount of use. Change the aluminum foil on the Grease Drain Pan frequently.

Clean foil on the Grease Drain Pan will make your food taste better and reduce the risk of a grease fire.

2) Cleaning outside surfaces:

Turn the Switch OFF (o) and disconnect the Power Cord.

Use a disposable rag or cloth, dampened with warm soapy water to wipe the grease from the outside of the Grill. DO NOT use oven cleaner, abrasive cleansers or abrasive cleaning pads on the outside Grill surfaces.

3) Outside Storage:

If the Grill is stored outside during the rainy season, care should be taken to ensure that water does not get into the Pellet Hopper. Wood pellets, when wet, expand greatly and will jam your Auger.

4) Cleaning the Porcelain Grates:

The cleaning of the Porcelain Grate works best while they are still warm. Be careful not to burn yourself. We recommend keeping a long-handled cleaning brush near the Grill. After removing your food, give the Porcelain Grate a quick brushing. It takes only a minute and it will be ready the next time you want to use the Grill.

5) cleaning the ash from inside and around the brazier:

Turn the Switch "OFF" and disconnect the Power Cord, Make sure that the Grill is COLD before cleaning the ash. Disposal of ash should be done only per the following instructions

a. Excess ash in the brazier may cause your fire to go out, especially in the "SMOKE" setting. The brazier should be inspected occasionally, and cleaned to remove the ash buildup. Again, cleaning the ash from in and around the brazier should be done only when the Grill is COLD.

b.Remove the Porcelain Grate, Grease Drain Pan and Heat Baffle to provide access to the brazier and the interior of the Grill. Much of the ash outside of the brazier can be swept to the open area at the right of the brazier using a small whisk broom. It can be removed from the Grill with a small metal fireplace shovel or other similar tool Dispose of the ashes per the following instructions.

WARNING! A vacuum cleaner is the best way to remove ashes from

the brazier but this must be done with extreme care to avoid the risk of fire. Again, cleaning the ash from the brazier should be done only when the Grill is COLD.
A utility-type vacuum cleaner, having a metal collection canister \ without a bag would be best for this task. However, almost any vacuum cleaner will work safely if this procedure is properly followed.
After assuring that the ash in the brazier is COLD, vacuum the ash from the inside of the brazier.

6) HOPPER ASSEMBLY
The hopper includes a clean-out feature to allow for ease of cleaning and change out of pellet fuel flavors. To empty, open the top of the pellet hopper, unscrew three screws and clean the pellets.

NOTE: a) Use a long handled brush or shop-vac to remove excess pellets, sawdust, and debris for a complete clean-out.

b) Check and clean off any debris from the fan air intake vent found on the bottom of the hopper. Once the hopper access panel is removed (see Electric Wire Diagram for diagram), carefully wipe off any grease build-up directly on the fan blades. This ensures airflow is sufficient to the feed system.

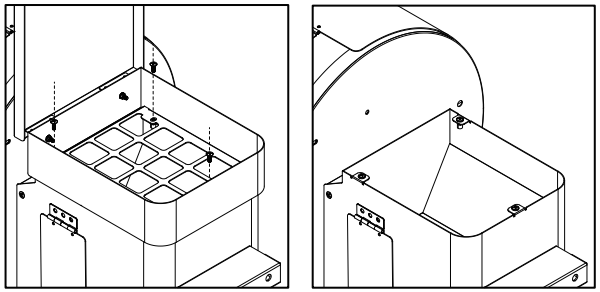

Disposal Of Ash:

Ashes should be placed in a metal container with a tight-fitting lid. The closed container of ashes should be placed on a non-combustible floor or on the ground, well away from all combustible materials, pending final disposal. When the ash are disposed of by burial in soil or otherwise locally dispersed, they should be retained in the closed container until all cinders have thoroughly cooled.

Trouble Shooting

Digital Thermostat Control Wiring Diagram

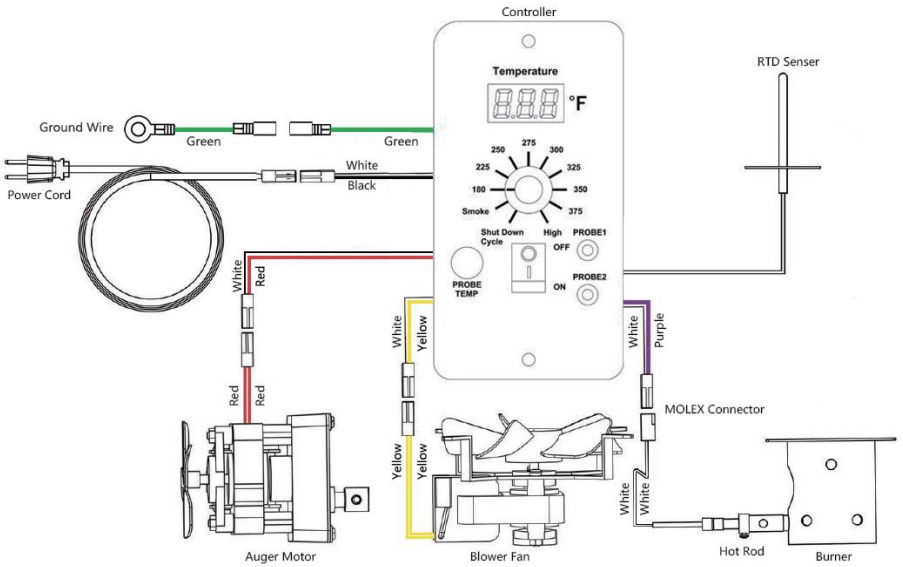

WHY WON'T MY GRILL IGNITE?

1) Verify power at the electrical outlet.
   a)If Power Cord is connected to a GFI (Ground Fault Interrupter), check and reset if necessary.
   b) Initiate start up.
   Still no ignition - Proceed to step 2.
2) Turn the Switch OFF (o) and disconnect the Power Cord. Remove the Control and check the fuse on back. Replace the fuse if blown. Reinstall the Control!

3) a) unplug Hot Rod connector (Purple/White wire pair), plug Power Cord into an appropriate, grounded electrical outlet and turn the Switch "ON".
NOTE: At this point the Grill will not ignite.
b) Check the Draft Inducer Fan and the Auger Drive Motor for operation. If both are operating -- the Hot Rod needs to be replaced.
4) If the problem is identified to be a failed Hot Rod, the Grill can still be used to cook and smoke by following the MANUAL IGNITION INSTRUCTIONS.

MANUAL IGNITION INSTRUCTIONS:

If the Hot Rod only is not operating, the Grill can still be used to cook and smoke using the MANUAL LIGHTING PROCEDURE below:

a) **DANGER!** Turn the Switch OFF (o) and disconnect the Power Cord. Allow the Grill to thoroughly cool if it is still hot. From beneath the Pellet Hopper, disconnect the Hot Rod (shown in the wiring diagram as above). You will need to remove the Hopper Bottom Panel to access the wiring. Once the Hot Rod is disconnected, replace the Hopper Bottom Panel and plug the Power Cord back into an appropriate, grounded electrical outlet.
b) Open the Pellet Hopper and fill with BBQ PELLETS.
c) Remove the Porcelain Grate, Grease Drain Pan and Heat Baffle to expose the brazier in the bottom of the Grill.
d) Pour 1/2 cup of BBQ PELLETS into the brazier.
e) Squirt 2 table spoons of Alcohol Gel fire lighter into the brazier on top of the Pellets.
DANGER! Never use gasoline, gasoline-type lantern fuel, kerosene, charcoal lighter fluid or similar liquids to start or "freshen up"afire in this Grill. Keep all such liquids well away from the Grill when in use.
f) Carefully light the Alcohol Gel with a fireplace match or a long-reach butane lighter.

DANGER! Never squirt Alcohol Gel into a burning fire or a hot brazier. The Alcohol Gel bottle could explode and cause a fire, serious injury or death.
g) Let the Alcohol Gel and Pellets burn for approximately 4 minutes.
h) After assuring the Pellets have ignited, install the Heat Baffle, Grease Drain Pan and Porcelain Grills back in place.
CAUTION! You will now have a fire in the brazier. Be careful not to burn yourself when you install these components. Gloves are recommended.
i) Turn the Switch ON (--) and the Temperature/Dial to any setting desired. With the Door closed, let the Grill preheat for approximately 10 minutes before placing food in the Grill.

Why Are No Pellets Being Delivered Into The Brazier?

1) Verify that there are Pellets in the Pellet Hopper. If this is the INITIAL FIRING or the Grill has run out of Pellets, allow sufficient time for the Pellets to travel from the Pellet Hopper to the brazier.
2) Initiate start up. See INITIAL FIRING INSTRUCTIONS in Using Instructions of this Manual,
Still no Pellets in the brazier - Proceed to step 3.
3) Turn the Switch "OFF" and disconnect the Power Cord.
a) Unplug the Auger Drive Motor (Red/White wire pair connector) and the Draft Inducer Fan (Orange/White wire pair connector).
b) Reconnect the Draft Inducer Fan to the Red/White wire pair and the Auger Drive Motor to the Orange/White pair.
c) Plug the Power Cord into an appropriate, grounded electrical outlet and turn the Switch "ON".
d) If the Auger Drive Motor is operating (check the small fan blade on the back of the motor), the problem is in the Three Speed or Digital Control, which will need to be replaced.
4) If the Auger Drive Motor is not operating but the Draft Inducer Fan is operating, the problem is in the Auger system, which will need to be checked.

a) With the Switch "OFF", locate the small fan blade on the back of the Auger Drive Motor.
b) While watching the fan blade, turn the Switch "ON". If the fan blade does not turn, turn the Switch "OFF". This indicates a defective Auger Drive Motor and it will need to be replaced.
c) If the fan blade turns a bit and then stops, continue watching and turn the Switch "OFF". If the fan blade UNWINDS slightly, this indicates a jam in the Auger system which will need to be cleared.
d)Turn the Switch "OFF" and disconnect the Power Cord. Remove the Pellets from the Pellet Hopper. Check for foreign objects and wet or decomposed Pellets, both of which can cause a jam in the Auger system. The Auger will need to be removed to clear a jam in the Auger system. See “HOW DO I REMOVE THE AUGER IF IT JAMS?" section below.

HOW DO I REMOVE THE AUGER IF IT JAMS?

1) Turn the Switch "OFF" and disconnect the Power Cord.
2) If the Grill is still hot, allow it to thoroughly cool.
3) Remove any covers necessary to access the Auger Drive Motor.
4) Remove the screw connecting the Auger Drive Motor shaft to the Auger shaft and the screw retaining the Auger Bushing into the Auger Tube.
5) With a small pipe wrench or locking pliers on the Auger shaft, turn the Auger counter clockwise. It will turn hard until it breaks free, then the Auger will turn freely.
6) Remove the Auger and clean all Pellets, ash or foreign objects-from the Auger, Auger Tube and brazier.
7) Sand the outside surfaces of the auger with medium grit sand-paper. Check the inside of the Auger Tube and sand it if needed. Vacuum the sanding grit out of the Auger Tube and brazier when finished. Check that the Auger rotates freely.
8) Re-attach the Auger shaft to the Auger Drive Motor shaft.

07 AFTER-SALES SERVICE

Customer service email: KingChiiOfficial@outlook.com