Item # 1006 701 944
1006 701 929

Model # G7202S-US
G7202SR-US

USE AND CARE GUIDE

72 IN. 2-DRAWER WORKBENCH

Questions, problems, missing parts?
Before returning to the store, call
Husky Customer Service
8 a.m. - 7 p.m., EST, Monday - Friday
9 a.m. - 6 p.m., EST, Saturday

1-888-43-HUSKY

WWW.HUSKYTOOLS.COM

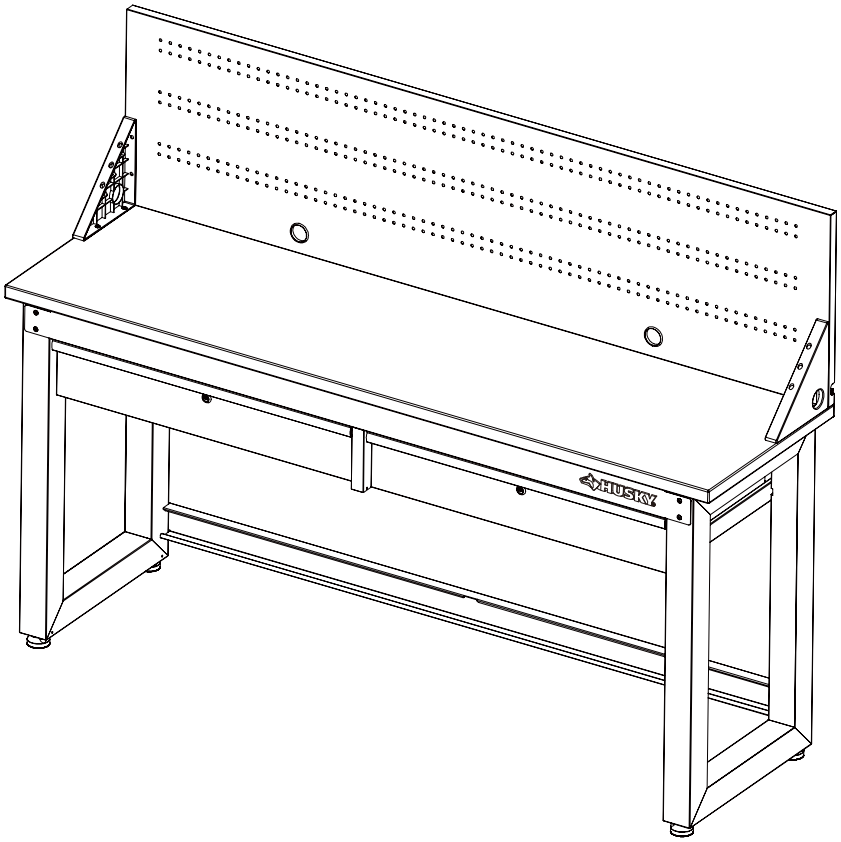

Due to continuing improvements,
the actual product may differ slightly
from the product described herein.

THANK YOU

We appreciate the trust and confidence you have placed in Husky through the purchase of this workbench. We strive to continually create quality products designed to enhance your home. Visit us online to see our full line of products available for your home improvement needs. Thank you for choosing Husky!

Table of Contents

Table of Contents 2
Safety Information 2
Warranty 2
Specifications 2
Pre-Installation 4
Assembly 4
Drawer Removal 13
Drawer Replacement 13
Maintenance 13
Care and Cleaning 13
Service Parts 14

Safety Information

To reduce the risk of serious injury, read and follow the safety instructions below before assembling and using this product.

- This product is intended for indoor use only.
- This product is not designed for commercial nor industrial usage.
- Solid wood refers to rubber wood.

CAUTION: DO NOT alter this product in any manner. For example, do not weld external bar locks or attach electrical equipment. This may cause product damage or personal injury.

CAUTION: Check all nuts and bolts periodically for tightness. When required, tighten them.

CAUTION: DO NOT leave children unattended near this product.

WARNING: Keep the product on level surfaces. The product could become unstable and it may tip over if stored or moved on anuneven surface ,which may cause personal injury, death or product damge.

WARNING: Any assembly or maintenance of the product must be carried out by adults only.

WARNING: Use at least two people to move, assemble or install this cabinet. Failure to do so can result in personal injury or product damage.

WARNING: DO NOT stand on the product and do not use it as scaffold.

Warranty

1 Year Limited Warranty for Solid Wood Top. This warranty excludes incidental/inconsequential damages and failures due to misuse, abuse or normal wear and tear.

This full warranty gives you specific rights, and you may also have other rights, which may vary from state to state.

Contact the customer service team at 1-888-43-HUSKY or visit www.huskytools.com.

Specifications

Maximum load for wood top	1200 lbs. / 544.2 kg
Maximum load for drawer	100 lbs. / 45.4 kg
Maximum load for pegboard	75 lbs. / 34 kg
Maximum total load	1475 lbs. / 669 kg

Pre-Installation

TOOLS REQUIRED

Hex Wrench
(Hex Key)

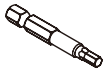

Hex Screwdriver Bit

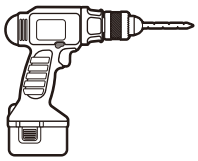

Drill
(not included)

Gloves
(not included)

Phillips Screwdriver
(not included)

HARDWARE INCLUDED

NOTE: Hardware not shown to actual size.

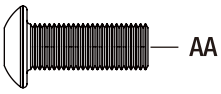

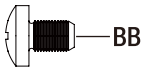

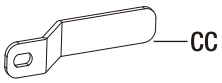

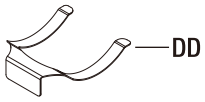

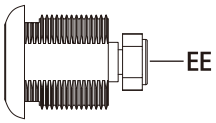

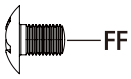

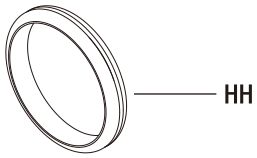

Part	Description	Quantity
AA	M6 x 16 hex socket head screw	44
BB	M4 x 6 Phillips pan head tapping bolt	12
CC	Locking hook	2
DD	Locking clip	2
EE	Lock	2
FF	M4 x 5 Phillips head bolt	16
GG	Adjustable feet	4
HH	Grommet	2

Pre-Installation (continued)

PACKAGE CONTENTS

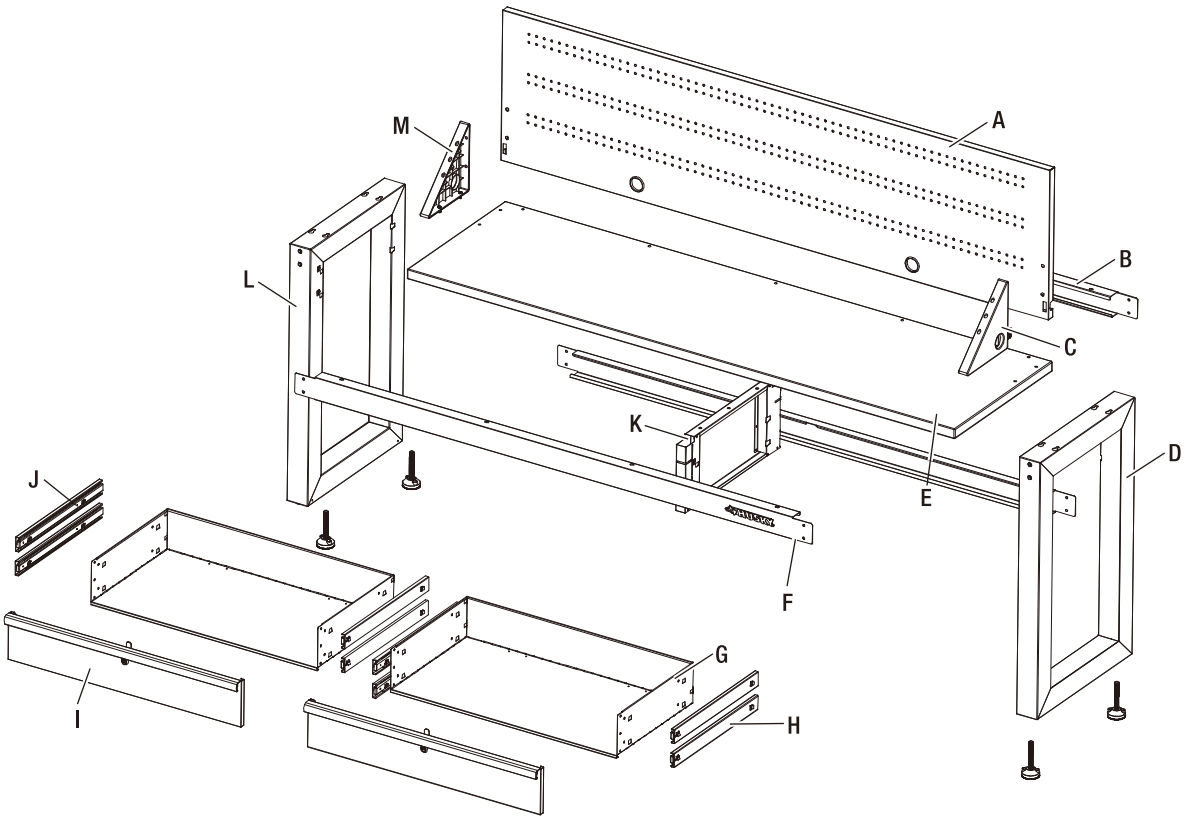

PACKAGE CONTENTS

Part	Description	Quantity
A	Pegboard	1
B	Back stiffener	2
C	Right side bracket	1
D	Right bench leg	1
E	Wood top	1
F	Front stiffener	1

Part	Description	Quantity
G	Drawer panel	2
H	Right slide	4
I	Drawer front panel	2
J	Left slide	4
K	Slide mounting panel	1
L	Left bench leg	1
M	Left side bracket	1

Assembly

NOTE: Assemble on a flat surface. A piece of cardboard is recommended to keep the product from being scratched during assembly.

Please wear gloves during the whole assembly process.

1 ATTACH THE BENCH LEGS

NOTE: The back side of the bench leg is the side with four holes, two at the top part and two at the bottom part.

- □ Distinguish the front and back of the wood top (E) per below drawing.
- □ Lay the wood top (E) on its face. Insert eight M6 x 16 hex socket head screws (AA) BY HALF to the bench leg (D & L) mounting holes at the bottom of the wood top (E).
- □ Put the bench legs (D & L) onto the half inserted screws at the wood top (E) through the gourd slots at the bench legs' top.
- □ Move the bench legs (D & L) to make the screws located at the narrow sections of the gourd slots.
- □ Tighten all the screws.

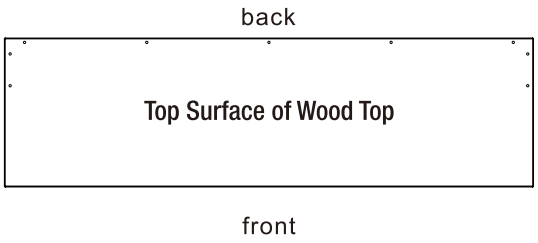

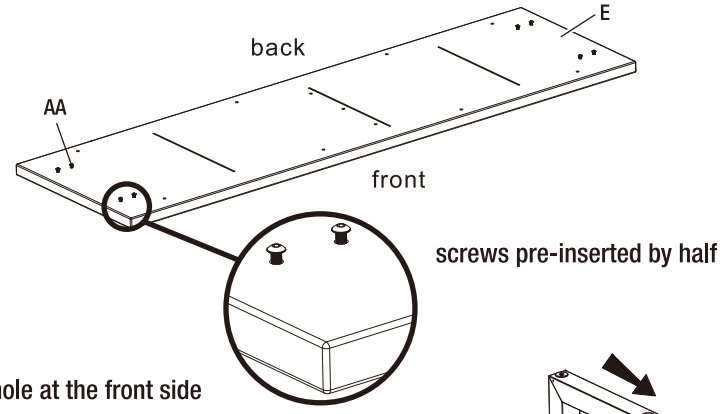

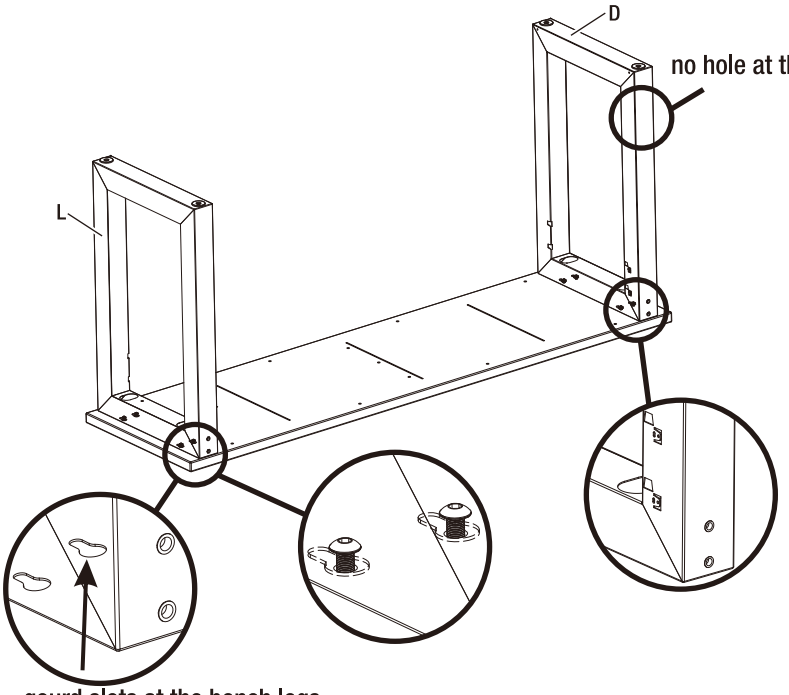

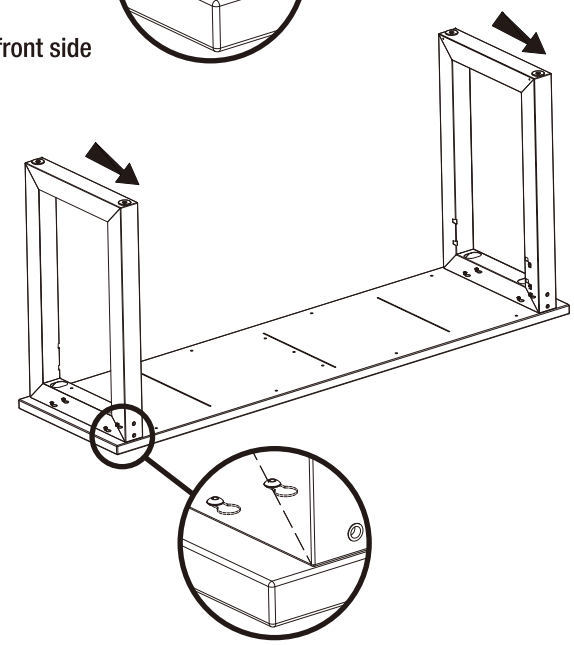

2 ATTACH THE SLIDE MOUNTING PANEL

Attach the slide mounting panel (K) to the wood top (E) with three M6 x 16 hex socket head screws (AA).

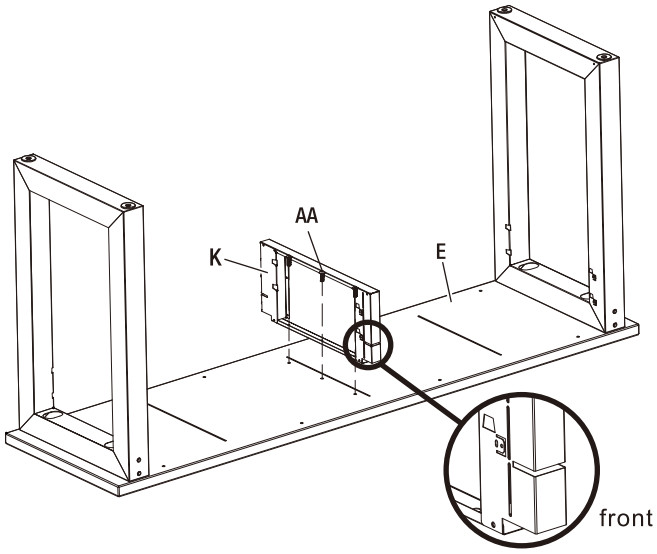

3 ATTACH THE STIFFENERS

- ☐ Attach the back stiffeners (B) to the back of the bench legs (D & L) with twelve M6 x 16 hex socket head screws (AA). Tighten securely.
- ☐ Attach the front stiffener (F) to the front of the bench legs (D & L) with eight M6 x 16 hex socket head screws (AA).

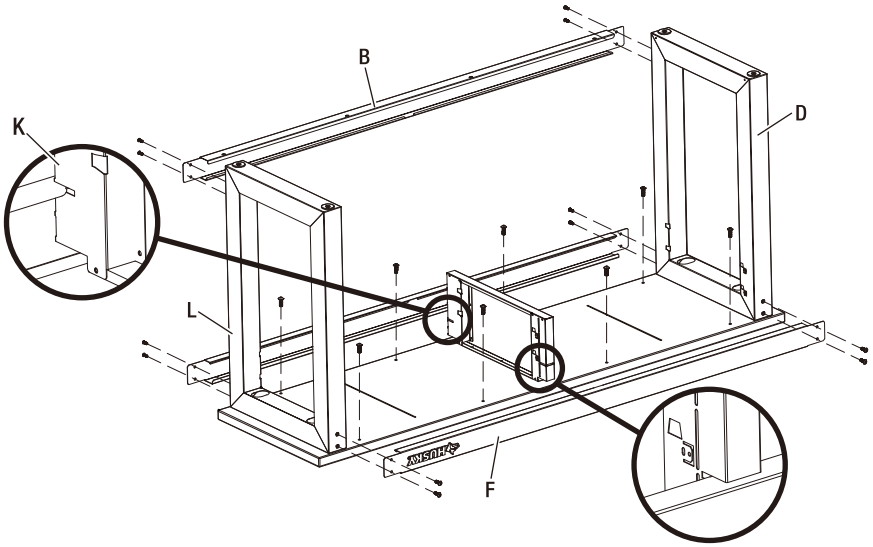

4 INSTALL THE ADJUSTABLE FEET

- ☐ Screw the adjustable feet (GG) into the bottom holes of the bench legs (D & L).
- ☐ Turn over the workbench.

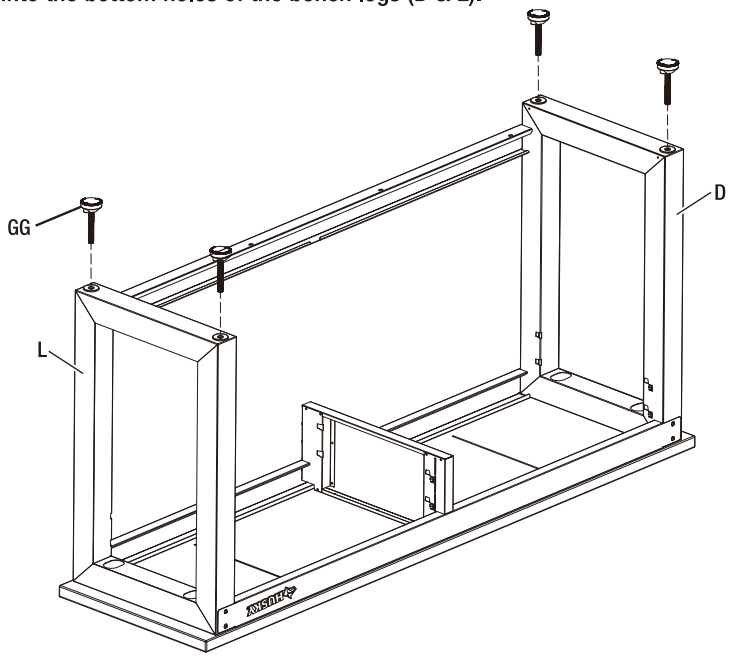

5 ATTACH THE PEGBOARD

- ☐ Attach the pegboard (A) to the wood top (E) with five M6 x 16 hex socket head screws (AA). Tighten securely.
- ☐ Install the grommets (HH).

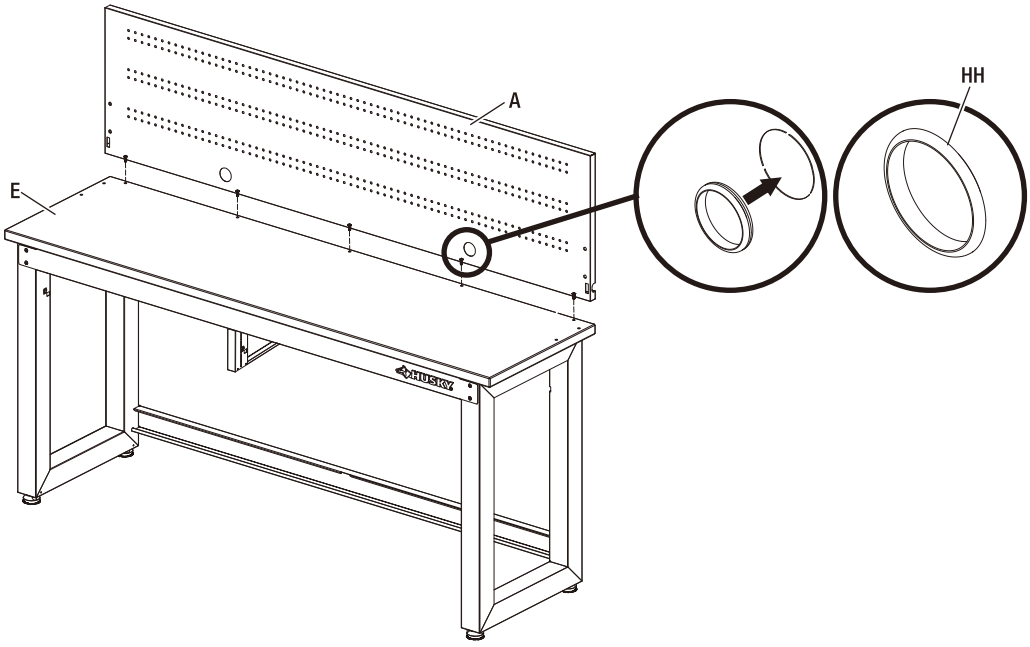

6 ATTACH THE SIDE BRACKETS

- □ Attach the side brackets (C & M) to the pegboard (A) by inserting the side brackets' back hooks into the slots at the pegboard (A).
- □ Secure the side brackets (C & M) to the wood top (E) and pegboard (A) with eight M6 x 16 hex socket head screws (AA). Tight securely.

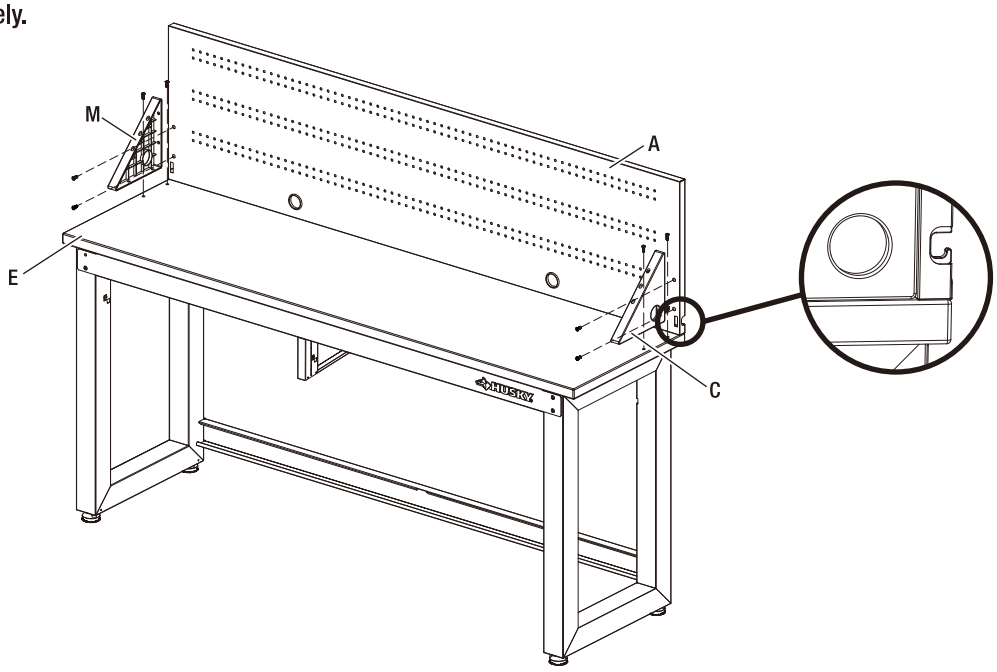

7 ASSEMBLE THE DRAWER

NOTE: Make sure your platform is free of debris or the drawer bottom is protected before laying the drawer on its bottom.

Step 1: Lay a drawer panel (G) on its bottom. The bottom side is the side with stiffeners.

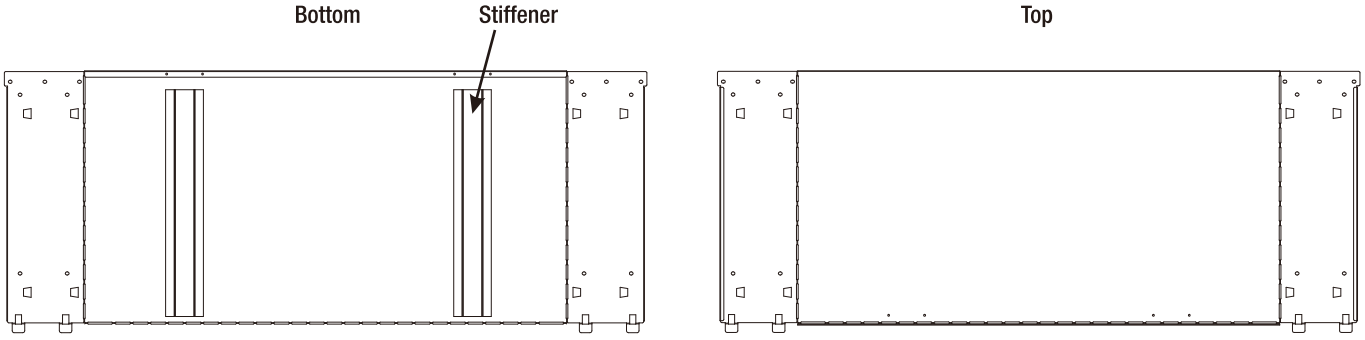

7 ASSEMBLE THE DRAWER (continued)

Step 2: Bend up the side panels upright to 90°.

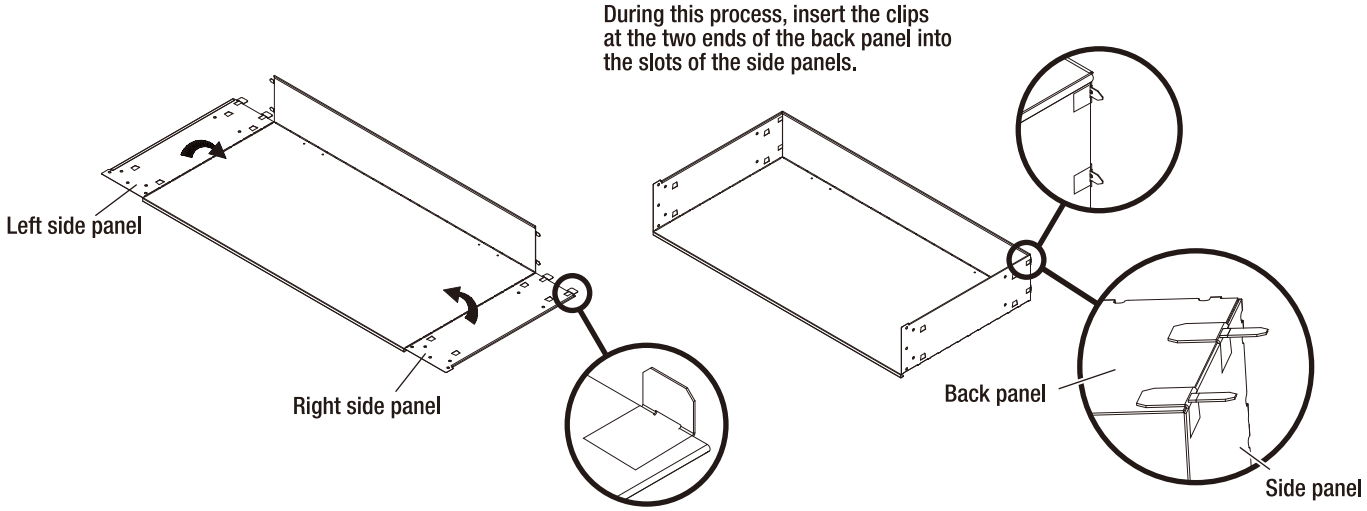

Step 3: Bend all the clips towards the back panel until they lean against the back panel.

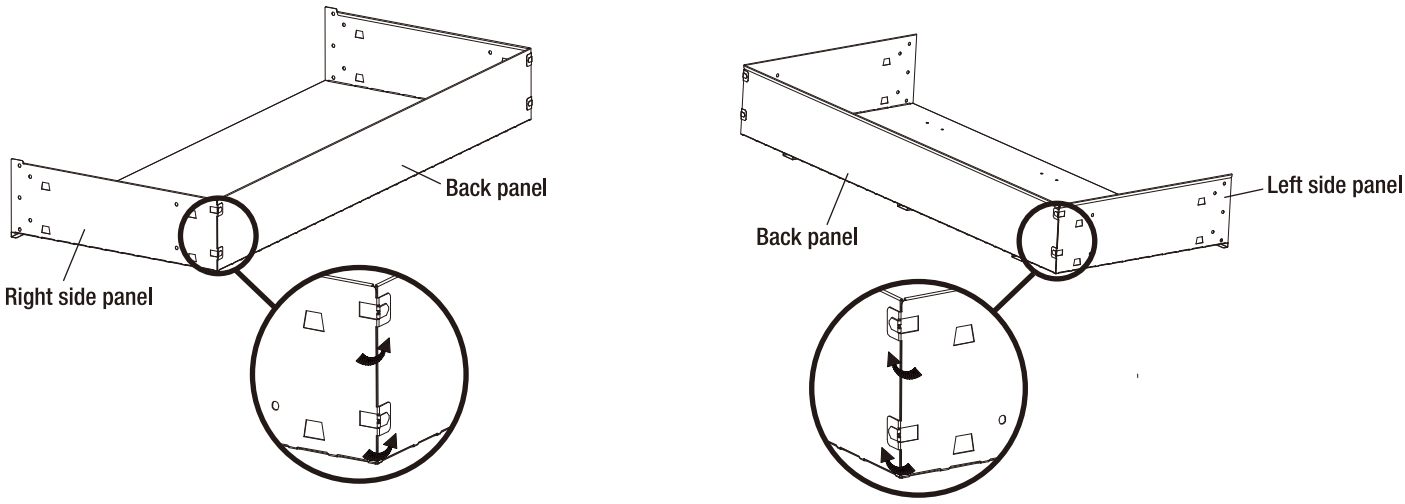

7 ASSEMBLE THE DRAWER (continued)

Step 4: ☐ Lay down the drawer front panel (I) on its face with a soft mat underneath for protection.

☐ Put the drawer body's front section onto the drawer front panel (I).

☐ Slide the drawer body's front bottom bended edge into the bottom groove of the front panel.

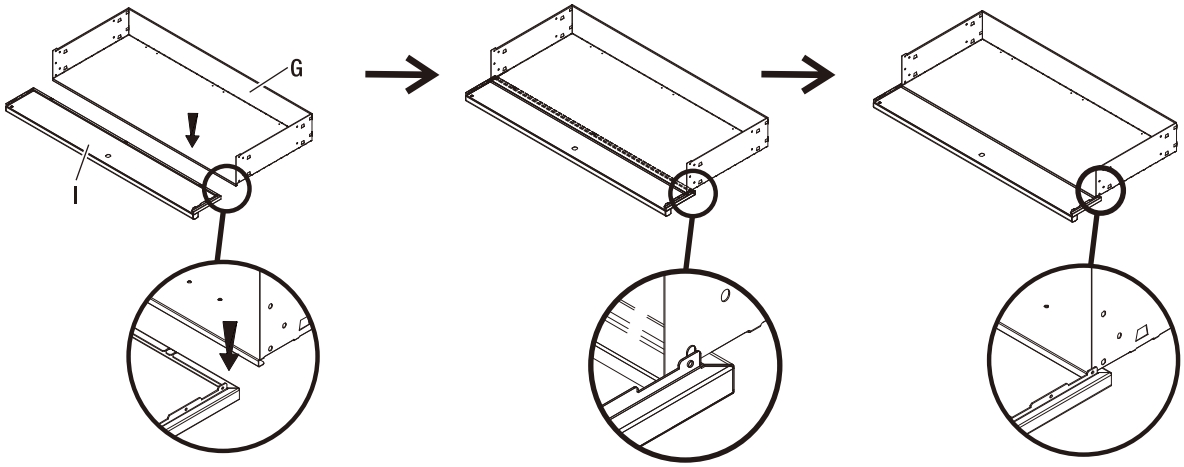

Step 5: Turn up the drawer front panel (I) upright to 90°. Make sure the bottom bended edge of the drawer body is surrounded by the bottom groove of the drawer front panel (I).

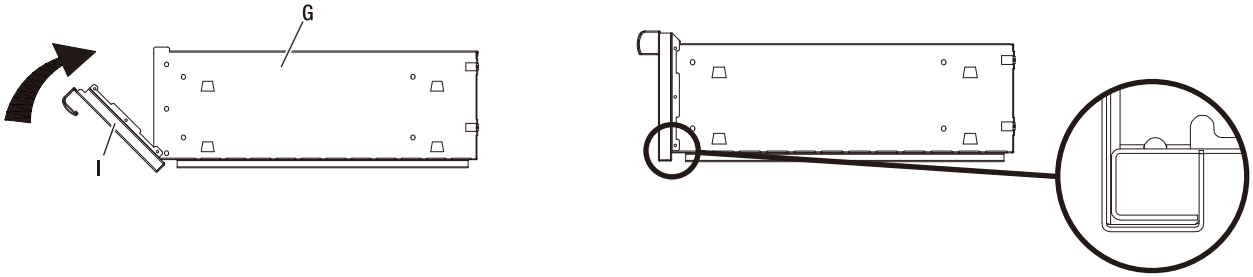

Step 6: Fasten the drawer front panel (I) and side panels together by screwing six M4 x 6 Phillips pan head tapping bolts (BB) through the side panels to the drawer front panel (I).

NOTE: At this step, DO NOT use power tools. Please use Phillips screwdriver by hand. Otherwise, product damage may be caused.

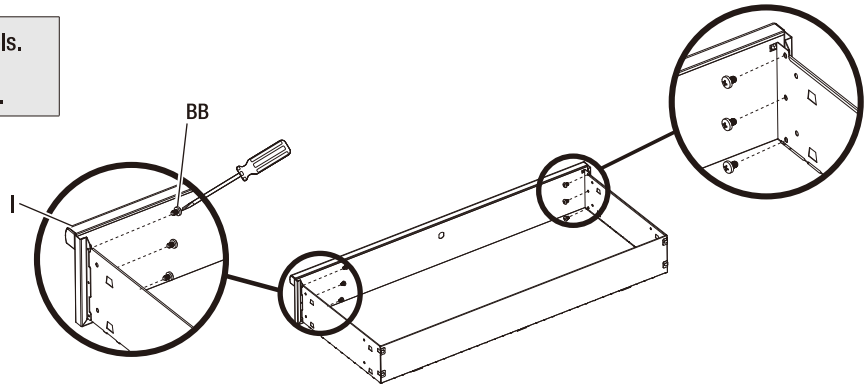

7 ASSEMBLE THE DRAWER (continued)

Step 7: Bend inwards all the clips at the bottom of the drawer front panel by 90° with the help of a screwdriver.

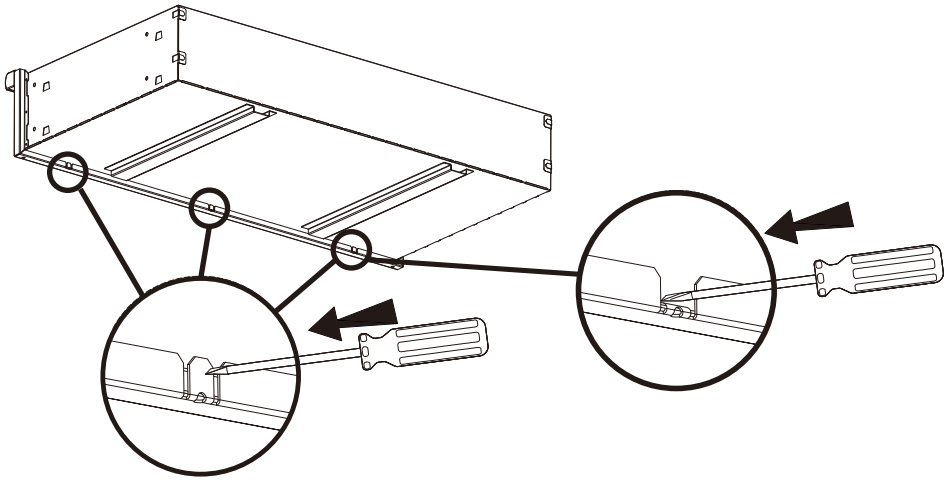

Step 8:

- ☐ Release the nut at the end of the lock (EE).
- ☐ Attach the lock (EE) to the drawer front (I). Make sure the lock code is at the lock face's top as shown below.
- ☐ Secure the lock (EE) to the drawer front by using the clip (DD). Make sure the clip is tightly against the drawer front panel (I) and the lock is tightly clipped.
- ☐ Attach the locking latch (CC) and nut to the lock as shown below.

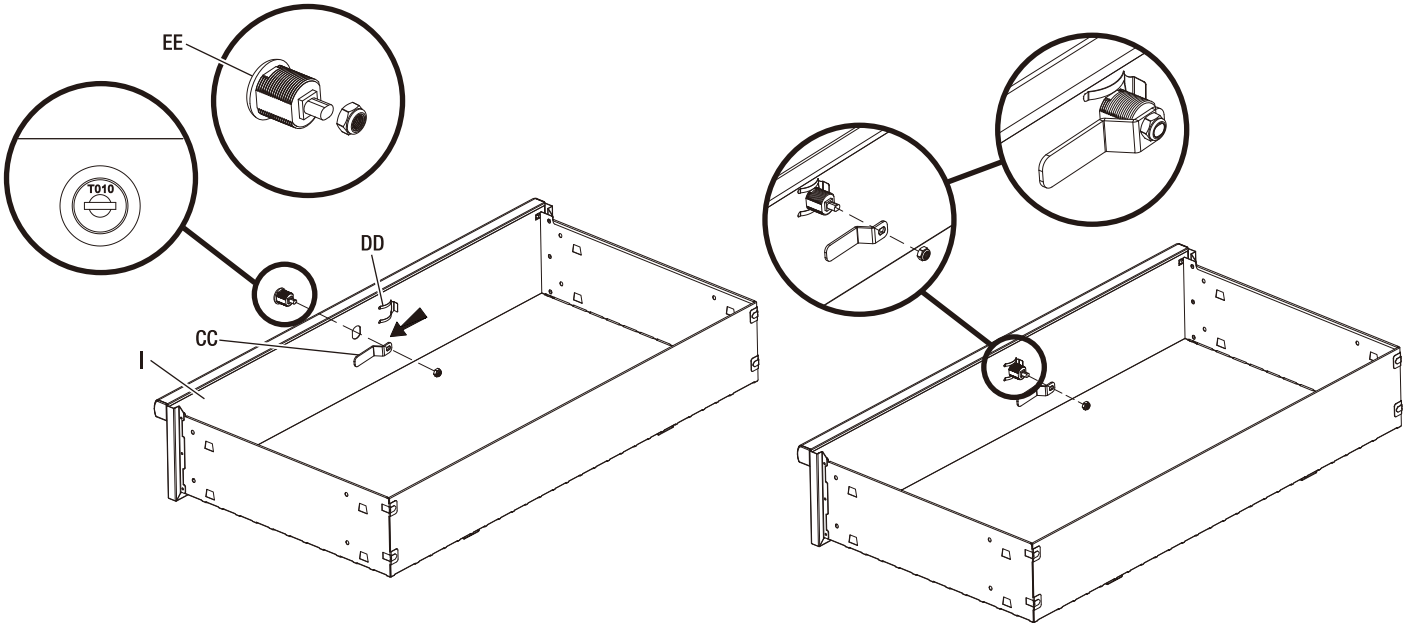

8 INSTALL THE SLIDES AND DRAWER

- □ Slide the back clip of the outer rail of a left slide (J) into the back slot at the left bench leg (L).
- □ Slide the front clip of the outer rail into the slot at the front of the left bench leg (L).
- □ Use a screwdriver to pry out the clip at bench leg by 90° to make it stand right above the side.
- □ Repeat the same procedure to install the other slides to the bench legs (D & L) and slide mounting panel (K).

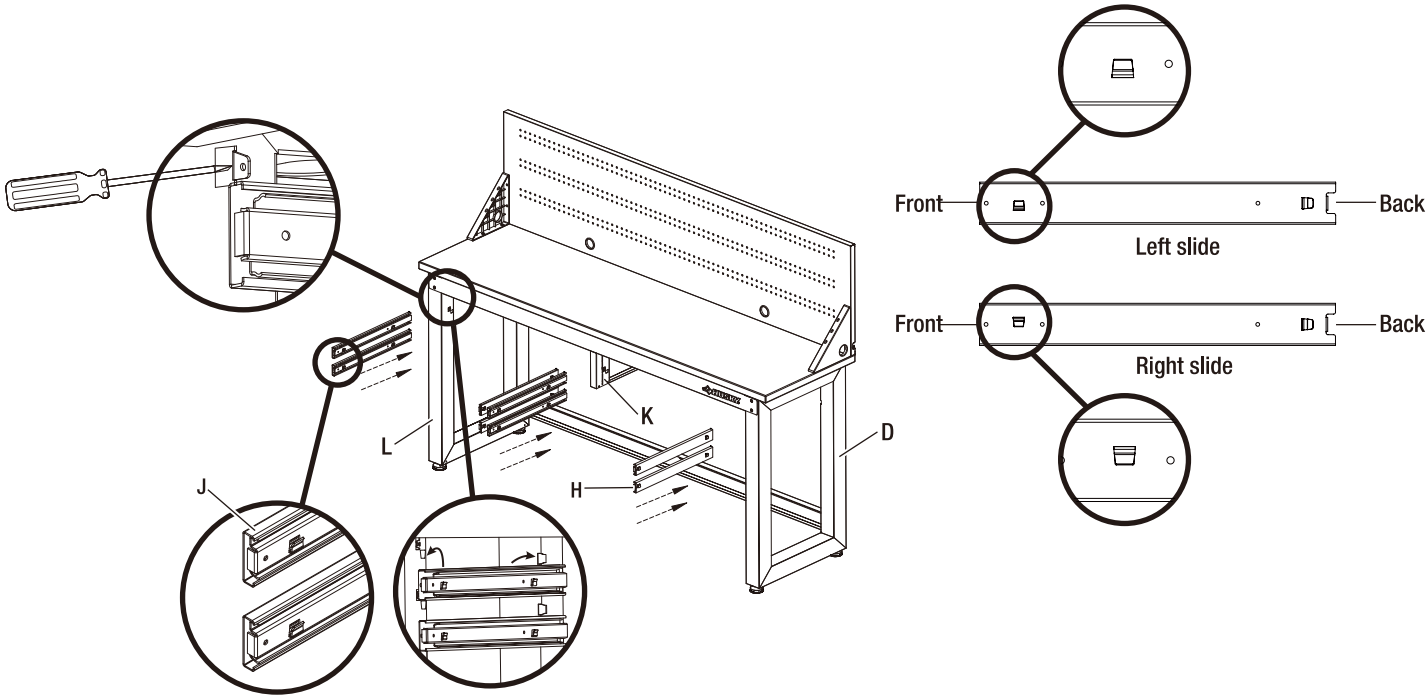

- □ Attach the drawers to the slides by sliding the slots at the drawers' side panels onto the upright clips of the slides.
- □ Secure the drawers to the slides by screwing sixteen M4 x 5 Phillips head bolts (FF) through the drawers to the slides.

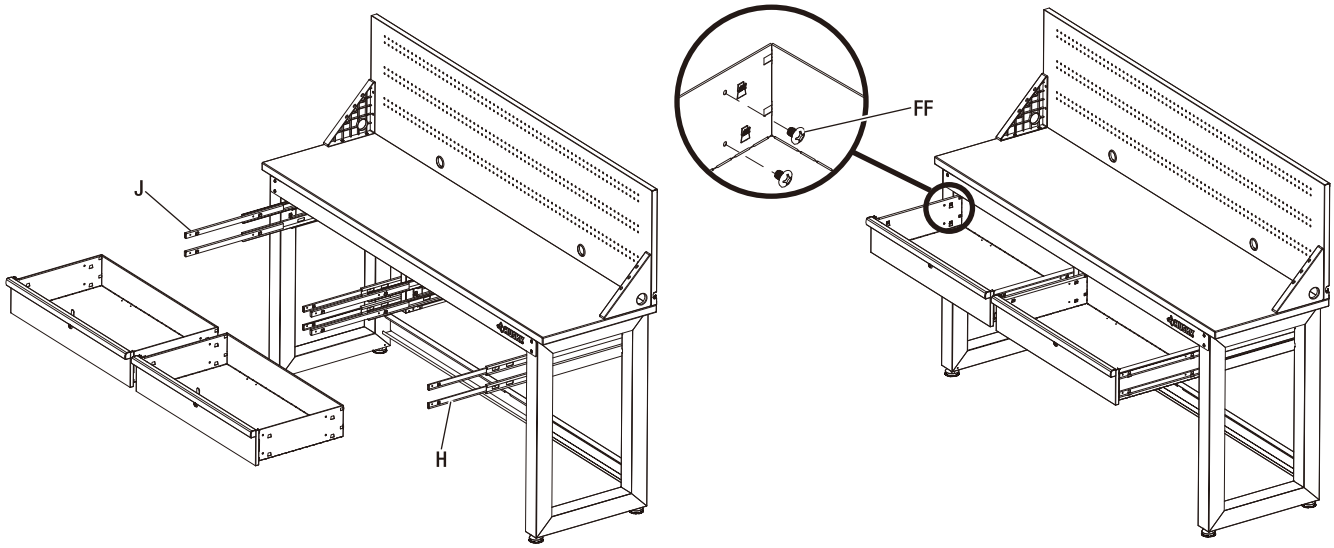

Drawer Removal

- Pull the drawer out until it is extended to the maximum. There are two black release levers: one on each side of the drawer.
- Pull one up while you push the other one down simultaneously. At the same time, pull the drawer out of the drawer slides.

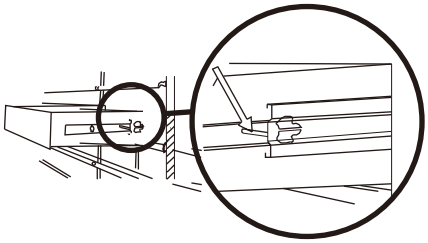

Pull up
(on one side of the drawer)

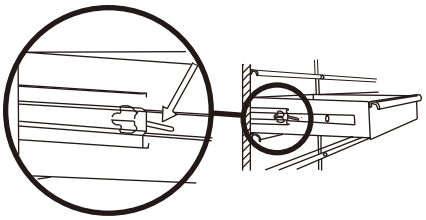

Push down
(on the other side of the drawer)

Drawer Replacement

Extend the drawer slides from the cabinet. Insert the brackets on each side of the drawer into the slots in the cabinet slides, being careful that they are properly positioned. Once properly inserted, completely close the drawer to set the slides in their proper positions.

Maintenance

- Check all nuts and bolts periodically for tightness. When required, tighten them.
- Lubricate the slides semi-annually with a spray lubricant or light duty oil.

Care and Cleaning

- Periodically clean the workbench surfaces with a soft rag and water.
- Grease and oil can be removed with most standard cleaning fluids. For safety, use a nonflammable cleaning fluid.

Service Parts

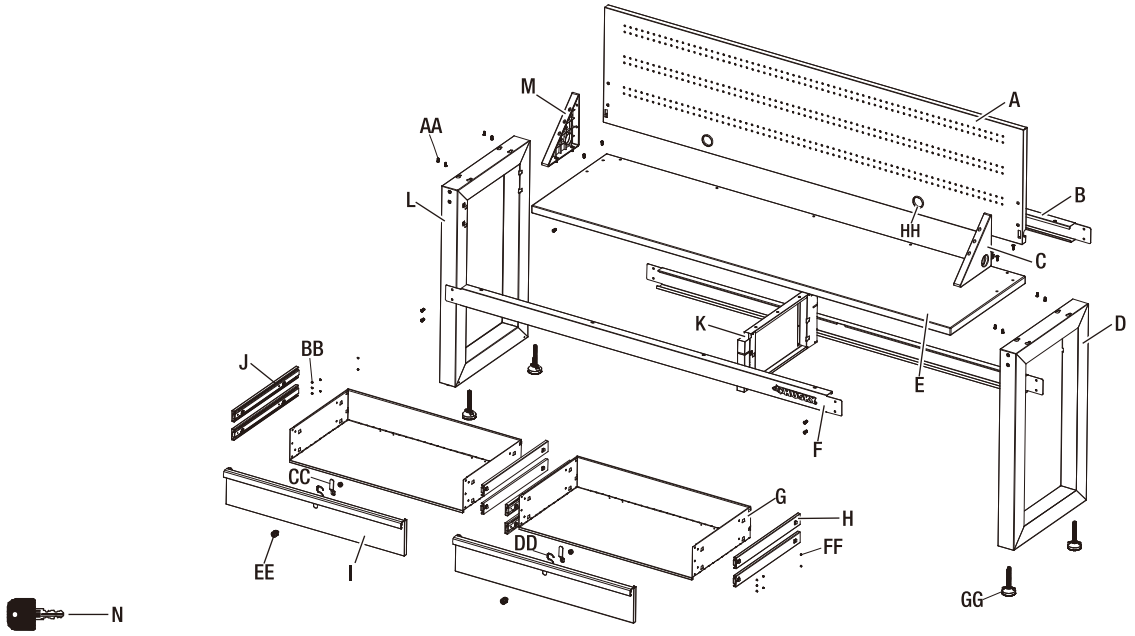

72 in. 2 Drawer Workbench (Black): Model #: G7202S-US; SKU 1006 701 944

Part	Replacement Part #	Description	Quantity
N	304213	Key	4
A	122349	Pegboard	1
B	244332	Back stiffener	2
C	313088	Right side bracket	1
D	122235	Right bench leg	1
E	307028	Wood top	1
F	244332-N01	Front stiffener	1
G	123351	Drawer panel	2
H	300409	Right slide	4
I	122350	Drawer front panel	2
J	300408	Left slide	4

Part	Replacement Part #	Description	Quantity
K	122352	Slide mounting panel	1
L	122233	Left bench leg	1
M	313087	Left side bracket	1
AA	320327	M6 x 16 hex socket head screw	44
BB	320335	M4 x 6 Phillips pan head tapping bolt	12
CC	244323	Locking hook	2
DD	304006	Locking clip	2
EE	304212	Lock	2
FF	320336	M4 x 5 Phillips head bolt	16
GG	313068	Adjustable feet	4
HH	314027	Grommet	2

72 in. 2 Drawer Workbench (Red): Model #: G7202SR-US; SKU 1006 701 929

Part	Replacement Part #	Description	Quantity
N	304213	Key	4
A	122357	Pegboard	1
B	244342	Back stiffener	2
C	313088	Right side bracket	1
D	122235-N02	Right bench leg	1
E	307028	Wood top	1
F	244342-N01	Front stiffener	1
G	123351-515	Drawer panel	2
H	300409	Right slide	4
I	122350-N02	Drawer front panel	2
J	300408	Left slide	4

Part	Replacement Part #	Description	Quantity
K	122356	Slide mounting panel	1
L	122233-N02	Left bench leg	1
M	313087	Left side bracket	1
AA	320327	M6 x 16 hex socket head screw	44
BB	320335	M4 x 6 Phillips pan head tapping bolt	12
CC	244323	Locking hook	2
DD	304006	Locking clip	2
EE	304212	Lock	2
FF	320336	M4 x 5 Phillips head bolt	16
GG	313068	Adjustable feet	4
HH	314027	Grommet	2

Questions, problems, missing parts? Before returning to the store,
call Husky Customer Service
8 a.m. - 7 p.m., EST, Monday - Friday
9 a.m. - 6 p.m., EST, Saturday

1-888-43-HUSKY

WWW.HUSKYTOOLS.COM

Retain this manual for future use.