Specification Sheet:

Freestanding Bath Tub

Model No.
BT0090

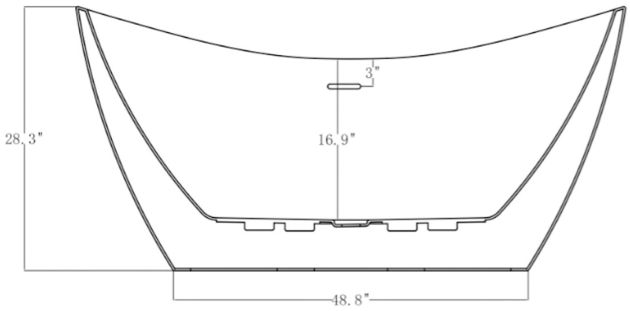

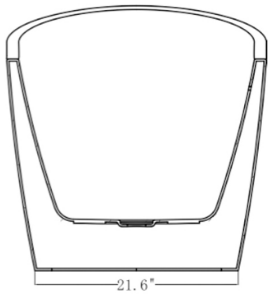

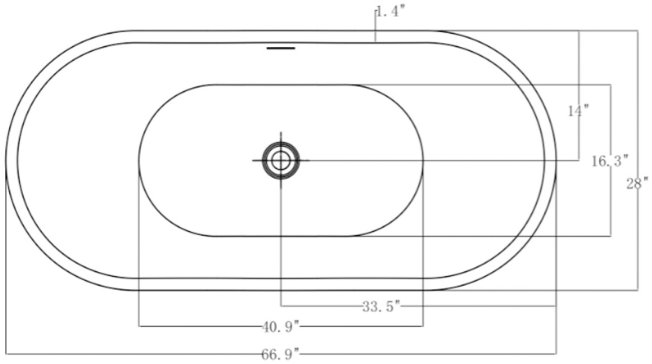

Bath Tub Type	Soaking Tubs
Overall Length	67
Dimensions(in.)	28” x 66.9” x 28.3”
Sitting Area	16.3” x 40.9” x 16.9”
Overflow	Yes
Depth From Overflow	13.9”
Overflow Color	N/A
Drain Placement	Center
Drain Color	Chrome

Water Capacity (gallon)	52.3Gal
Material	Fiberglass
Finish	Glossy White
Coating	Acrylic
Adjustable Feet For Leveling	Yes
Drain Assembly Included	Yes
Installation Type	Freestanding
Certification	US&CanadacUPCCertified
Warranty	Limited 1-Year Parts Warranty