Item ID	Front Thickness [in] mm	Door Thickness [in] mm
BT2135B-WH	[.63] 16	[.63] 16

This profile belongs to BT2135B-WH

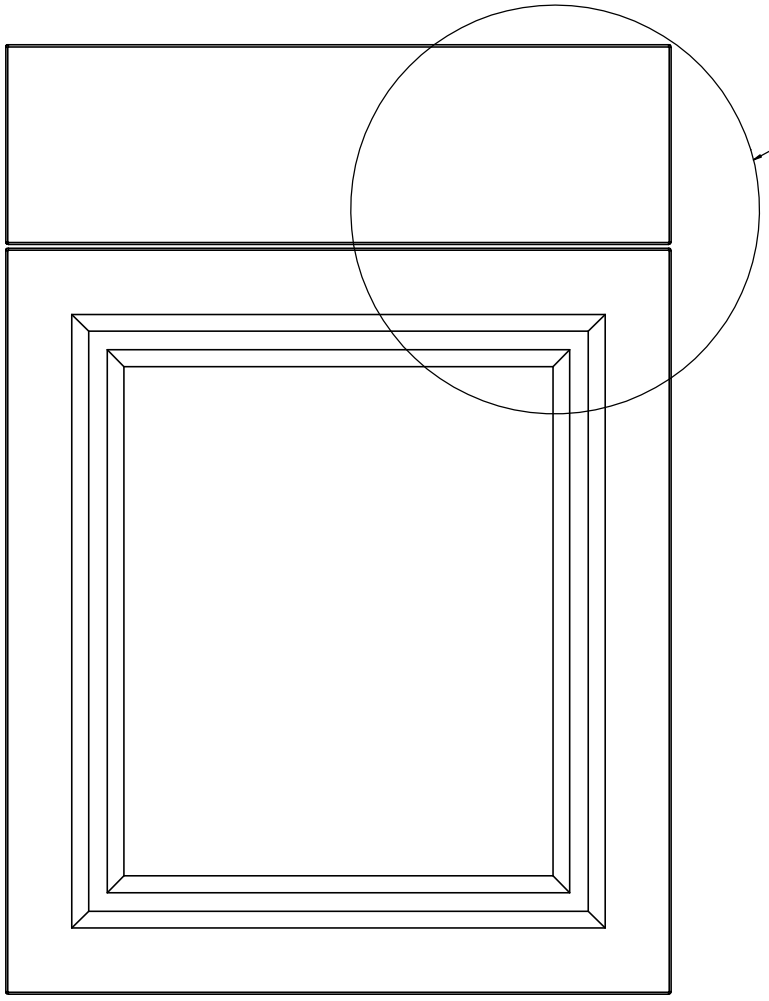

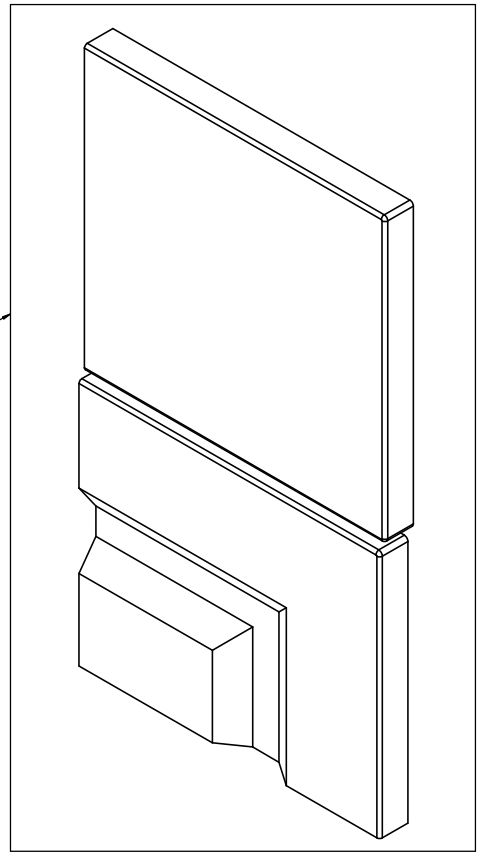

Detailed View

Profile: Benton White

PROPRIETARY AND CONFIDENTIAL
THE INFORMATION CONTAINED IN THIS DRAWING IS THE SOLE PROPERTY OF WOODCRAFTERS. ANY REPRODUCTION IN PART OR AS A WHOLE WITHOUT THE WRITTEN PERMISSION OF WOODCRAFTERS IS PROHIBITED.

UNLESS OTHERWISE SPECIFIED

DIMENSIONS ARE IN MM AND [INCHES]

TOLERANCES ARE +.039[1] -.039[1]

SCALE:1:2

Wood Crafters®

Item ID	Shelf Thickness [in] mm	Shelf Length and Width [in] mm	Depth "X" [in] mm
BT3630W-BT	[.75] 19	L:[10.57] 268.5 W:[34.56] 878	[12.59] 320
BT3630W-WH	[.75] 19		[12.44] 316
CM3630W-DK	[.75] 19		[12.59] 320
CM3630W-WH	[.59] 15		[12.44] 316
EH3630W-GB	[.75] 19		[12.59] 320
BT3630W-RC	[.75] 19		[12.59] 320
CM3630W-KG	[.75] 19		[12.44] 316

Description					
Kitchens - Wall Cabinet 36					
REV	ECO#	Description	REV'D BY DATE	CHK'D BY DATE	APRV'D BY DATE
2		New Model Added	11/09/17	11/09/17	11/09/17
3		Structural Change	07/25/18	07/25/18	07/25/18

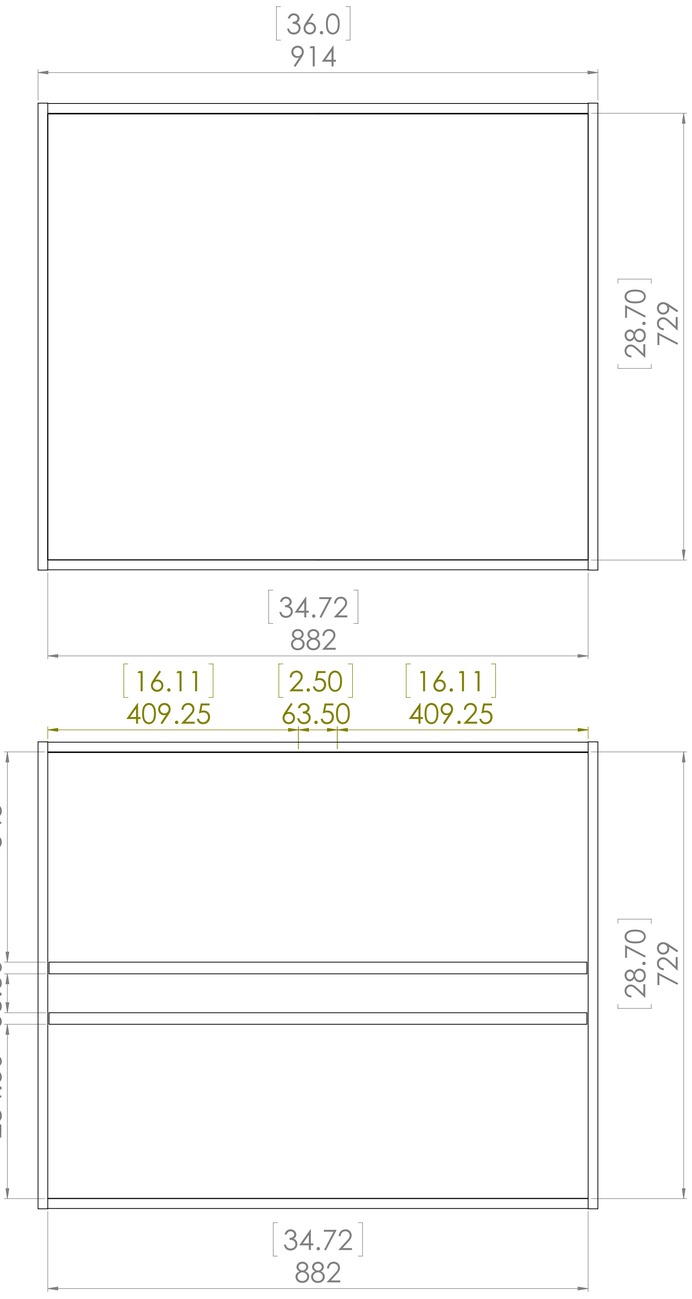

Back View

Front View (front door removed)

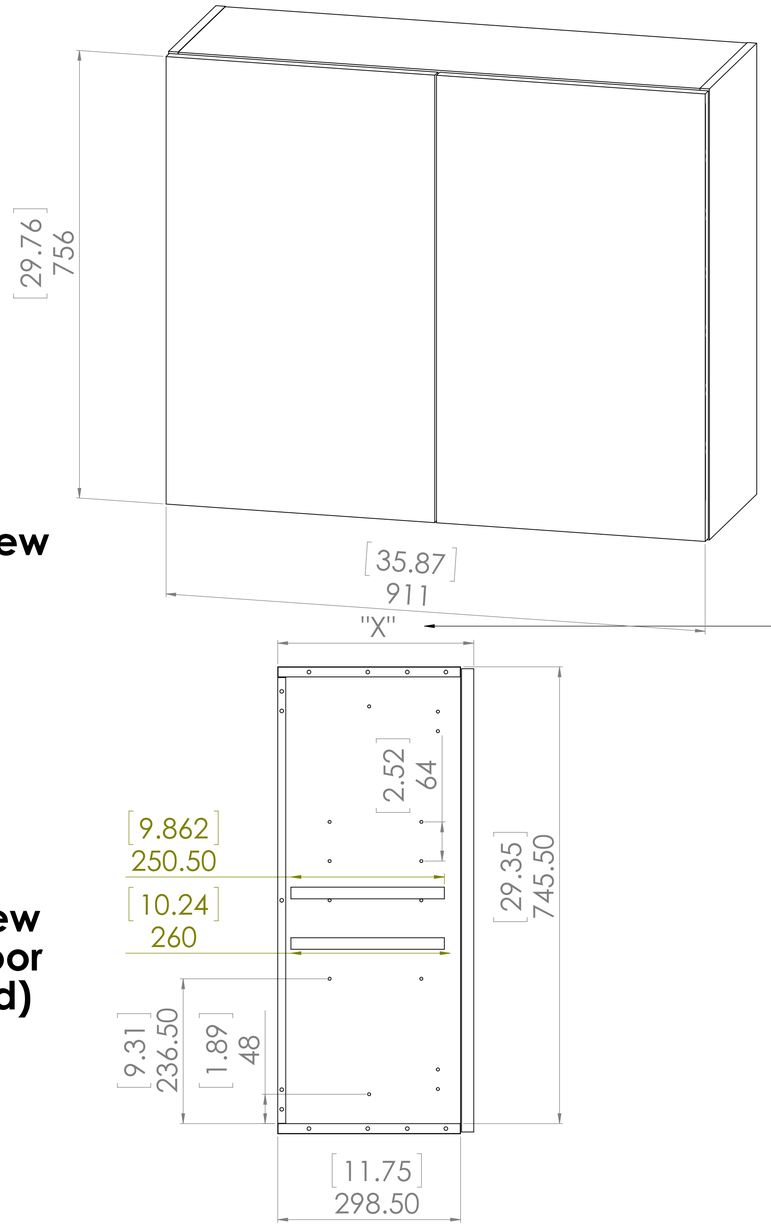

Depth "X" depends on door profile

Side View (left panel removed)

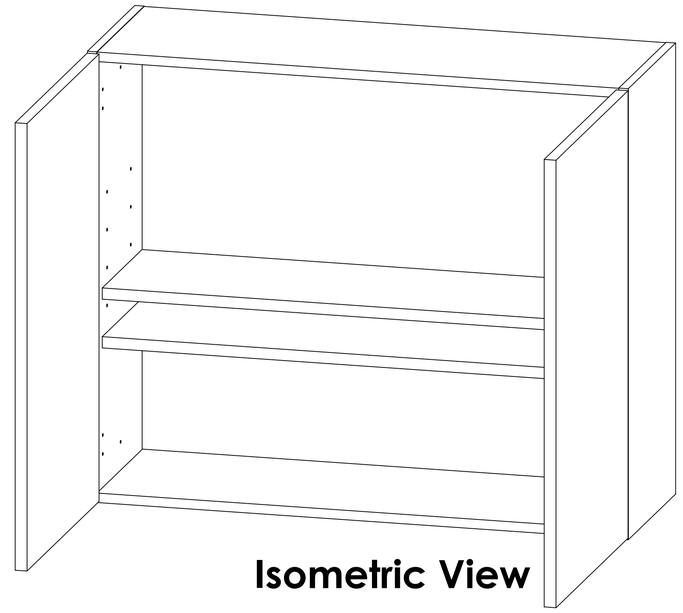

Isometric View

	NAME	SIGNATURE	DATE	
DRAWN	R. Rubio		11/09/17	MATERIAL: Plywood CM-WH. Particle Board the other Cabinets.
CHK'D	R. Rubio		11/09/17	
APPV'D	R. Rubio		11/09/17	
MFG	R. Rubio		11/09/17	

PROPRIETARY AND CONFIDENTIAL

THE INFORMATION CONTAINED IN THIS DRAWING IS THE SOLE PROPERTY OF WOODCRAFTERS. ANY REPRODUCTION IN PART OR AS A WHOLE WITHOUT THE WRITTEN PERMISSION OF WOODCRAFTERS IS PROHIBITED.

UNLESS OTHERWISE SPECIFIED

DIMENSIONS ARE IN mm AND [INCHES]

TOLERANCES ARE +/- 1[0.039]

SCALE:1:5

Wood Crafters®

Wall Cabinet 36in

3

SCALE:1:5

SHEET 1 OF 1