WATER CREATION

MODEL: MADISON30

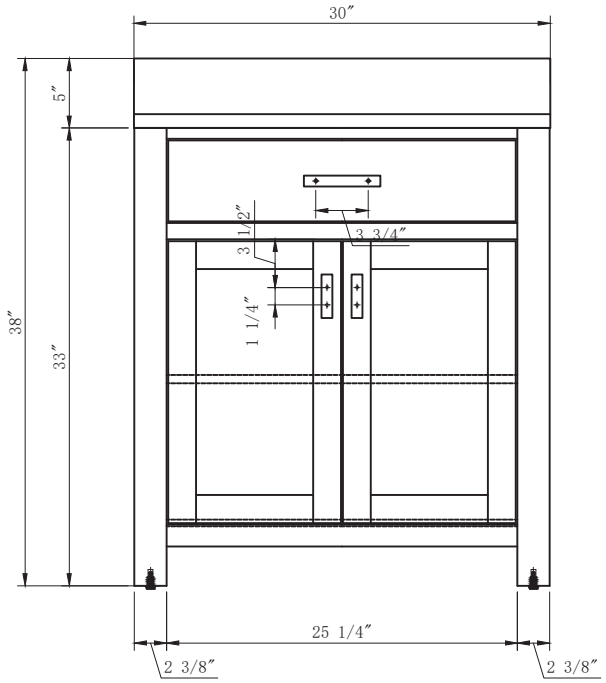

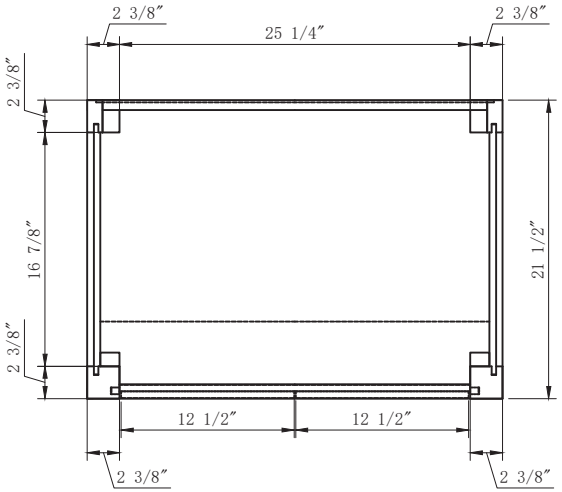

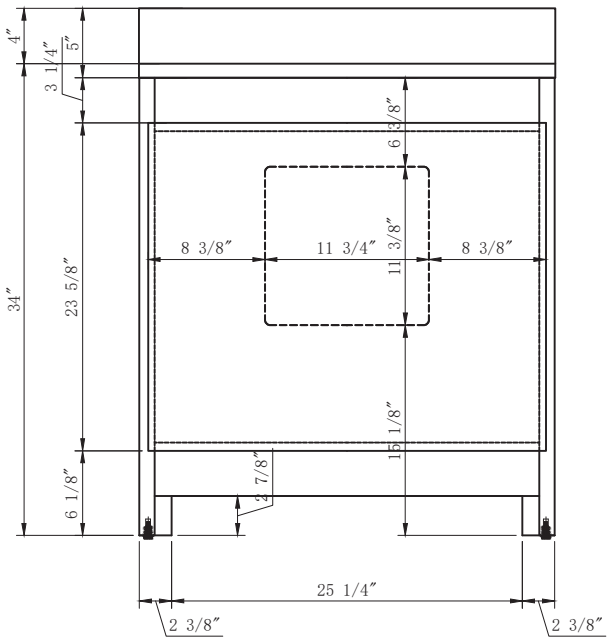

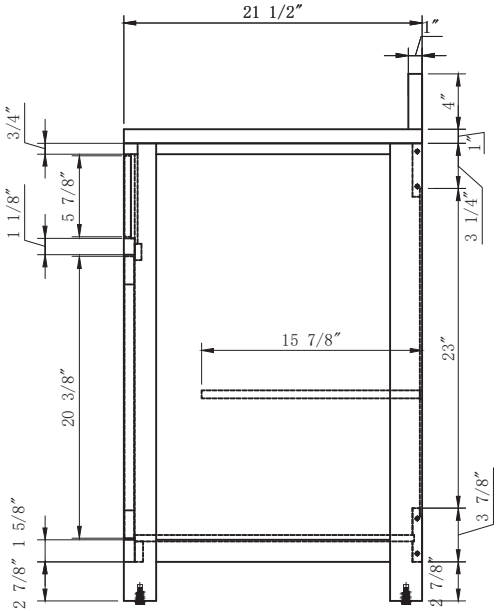

WATER CREATION

MODEL: MADISON30

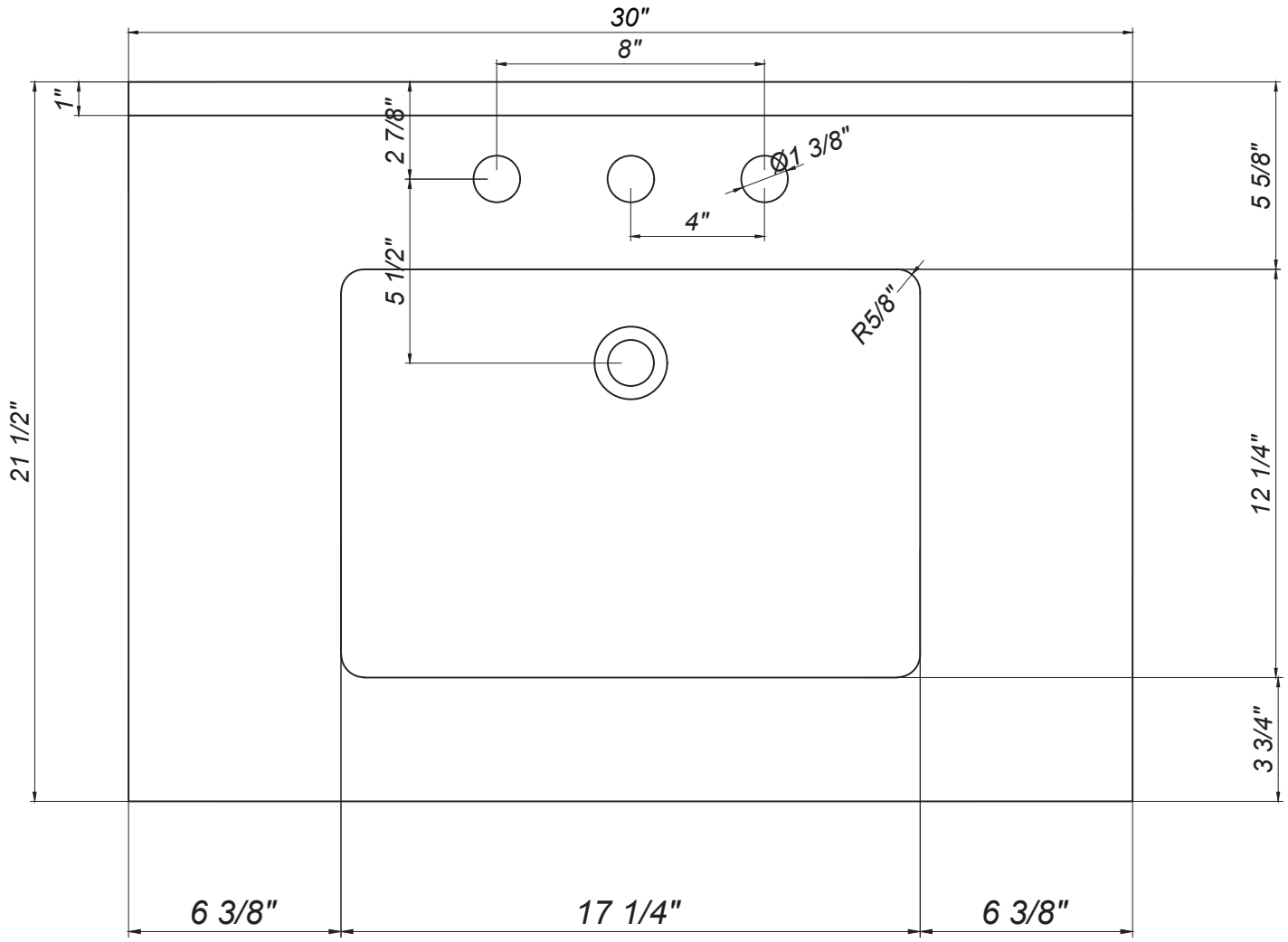

WATER CREATION

MODEL: MADISON30

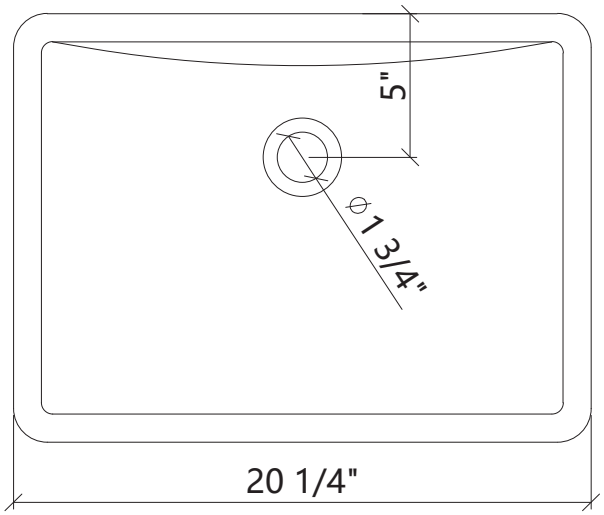

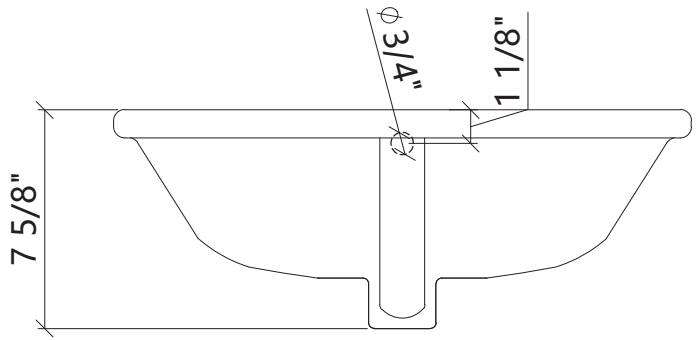

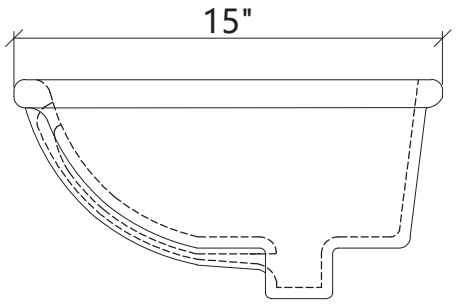

WATER CREATION

MODEL: RET-M-2436

