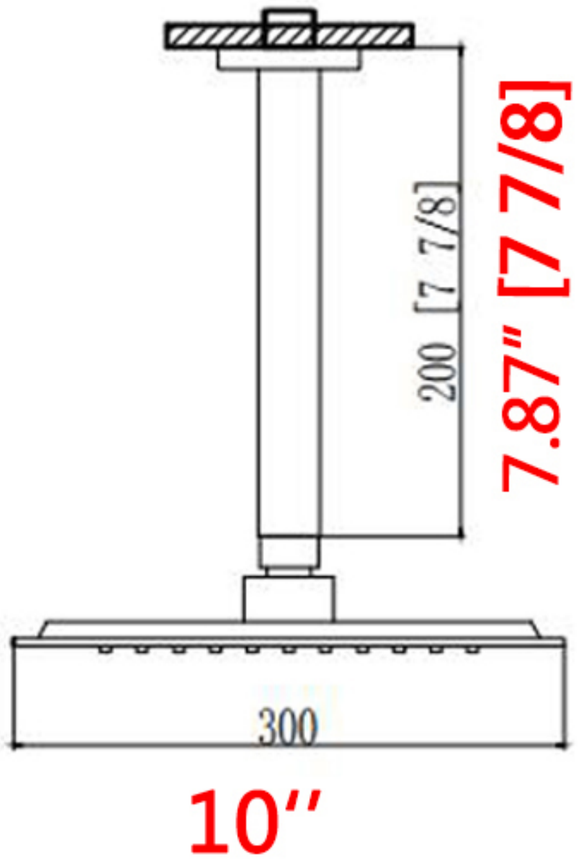
200 [7 7/8]
7.87" [7 7/8]
300
10''

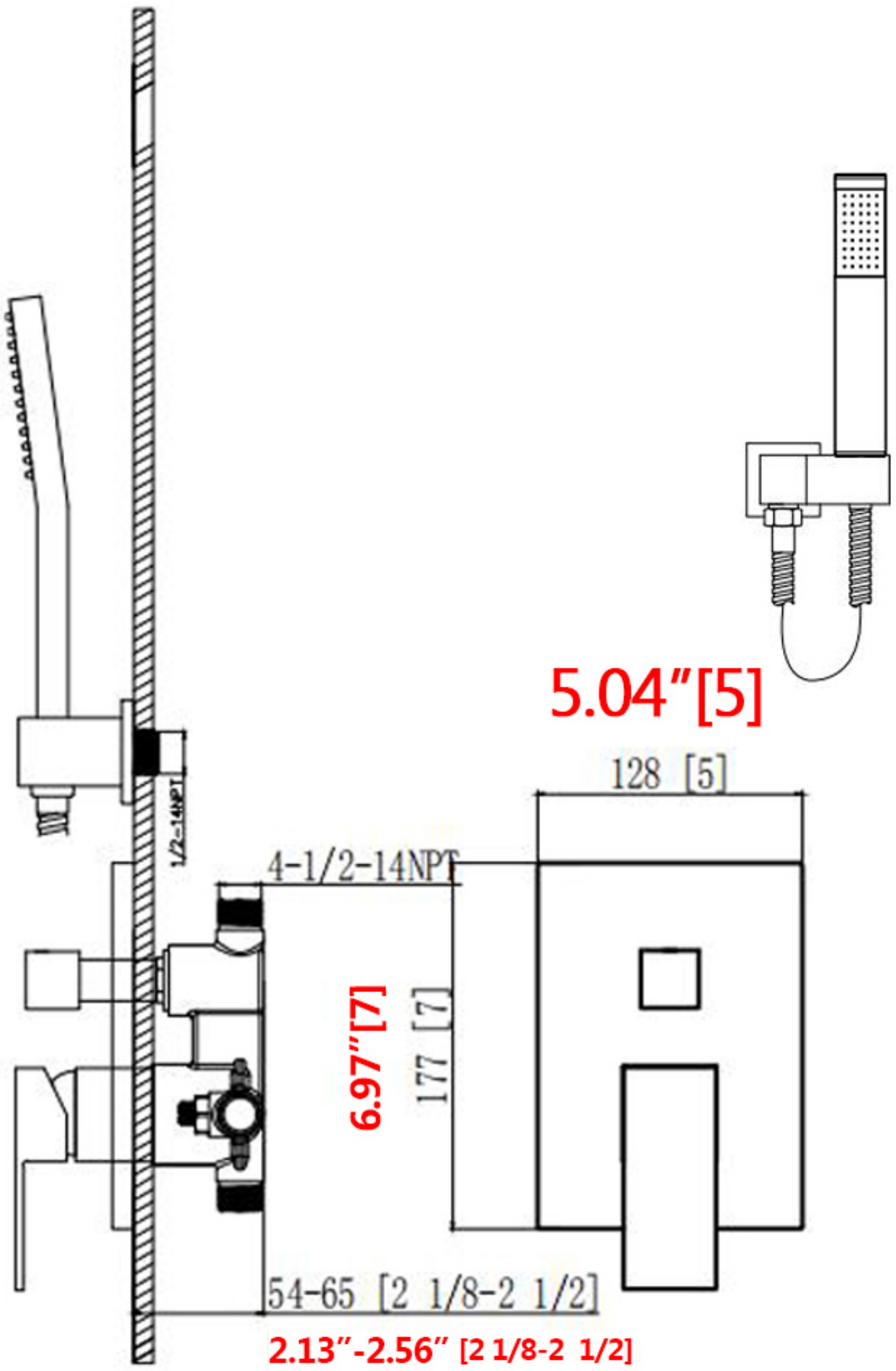
5.04"[5]
128 [5]
4-1/2-14NPT
6.97"[7]
177 [7]
54-65 [2 1/8-2 1/2]
2.13"-2.56" [2 1/8-2 1/2]