73" x 22" Vanity Top with Flat Edge Profile

Double trough bowl and 8" faucet spread

HALSTEAD INTERNATIONAL

Sterling Grey 112 **Winter White** 004 **Black** 888 **Carrara** 108

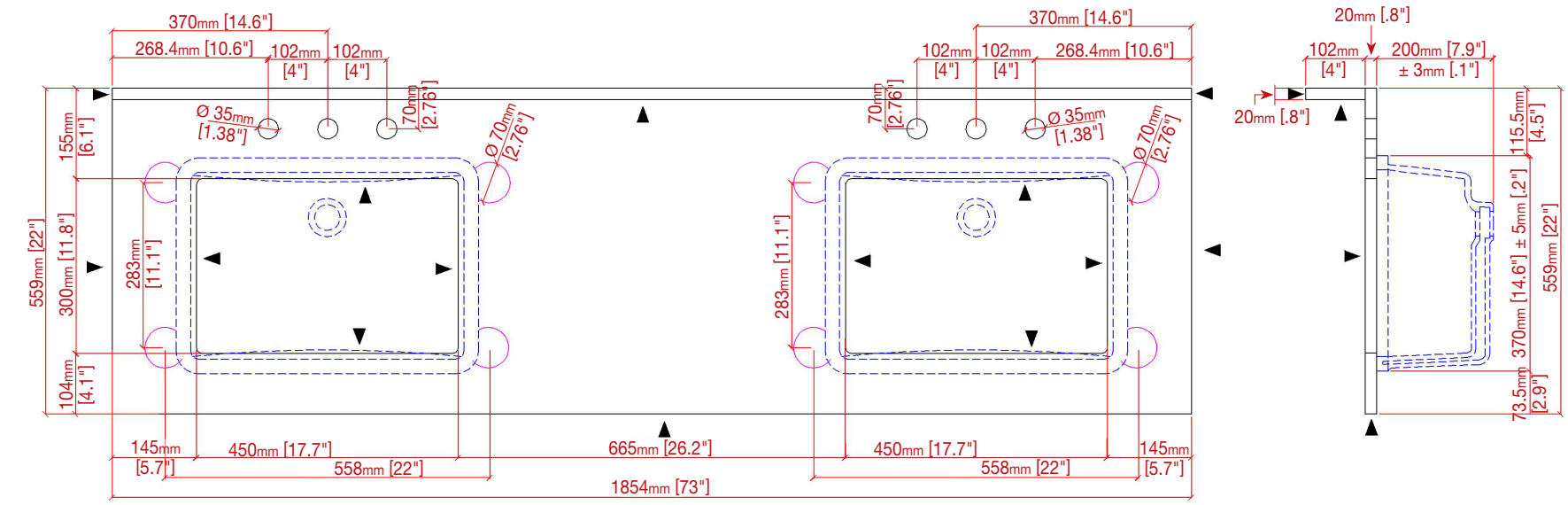

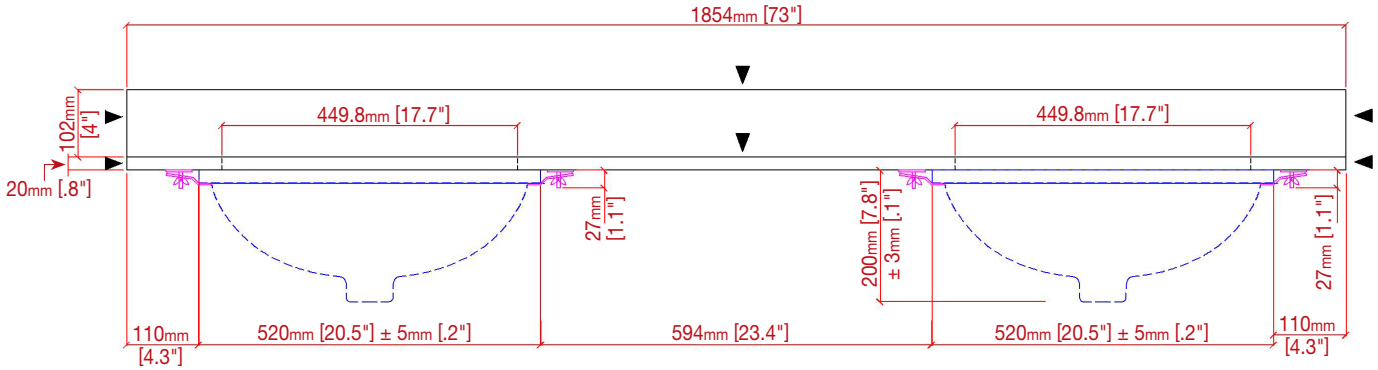

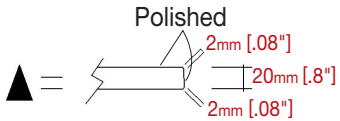

The information contained in this drawing is the sole property of Halstead International. Any reproduction in part or whole without the written permission of Halstead International is prohibited. All dimensions are subject to change and variation without notice.