Detailed Diagram of Acrylic Shower Wall Components

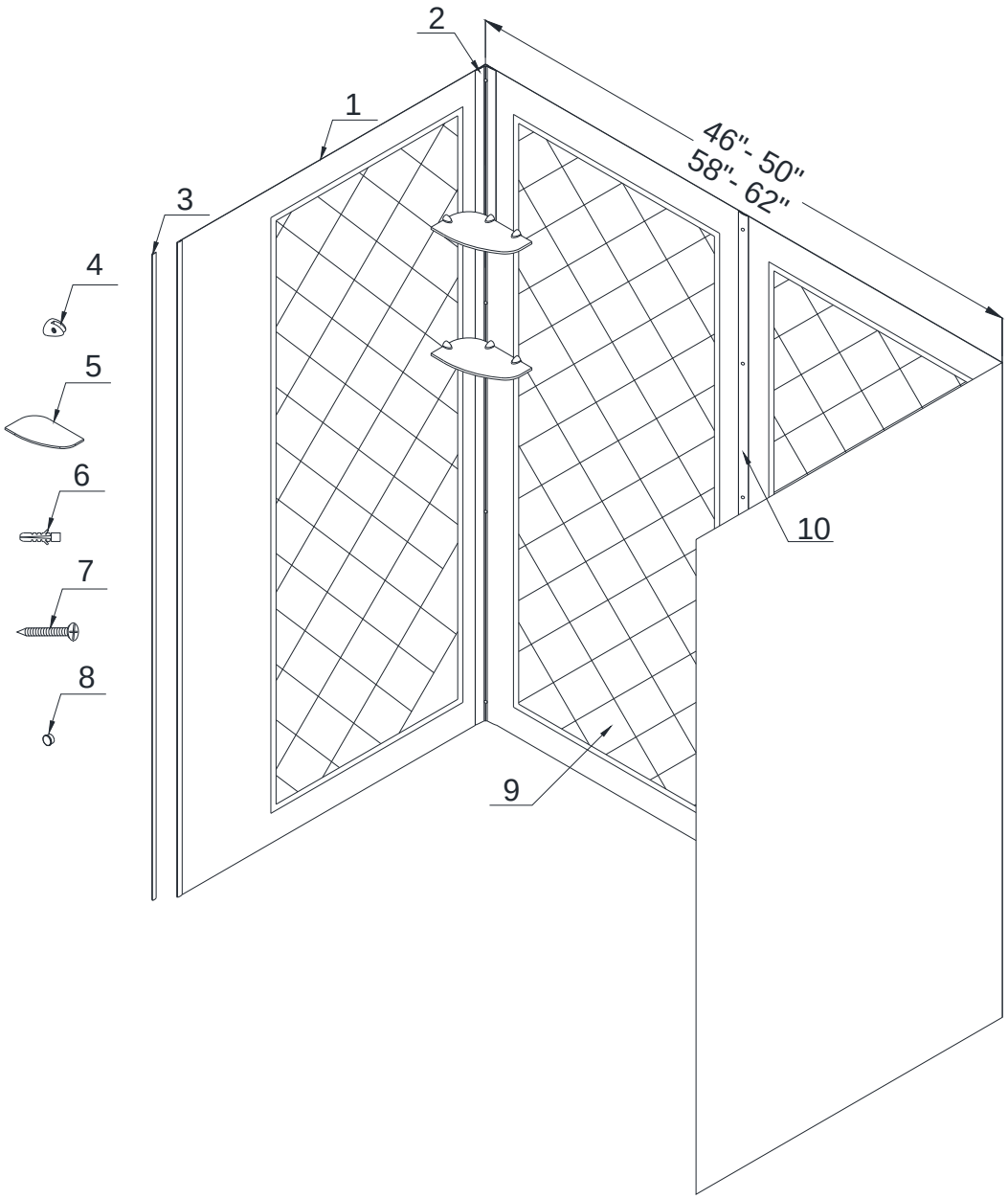

Packing List

01	Side panel	2pcs	06	Wall anchor	21pcs
02	Corner cover	2pcs	07	Countersunk screw ST4.2×30	21pcs
03	Decorative edge molding	2pcs	08	Decorative cover	15pcs
04	Shelf bracket	6pcs	09	Back panel	2pcs
05	Glass shelf	2pcs	10	Center cover	1pc

