OMSID # 312727244
OMSID # 312727269

StyleWell™

Model #HDFP48-45
#HDFP48-45AE

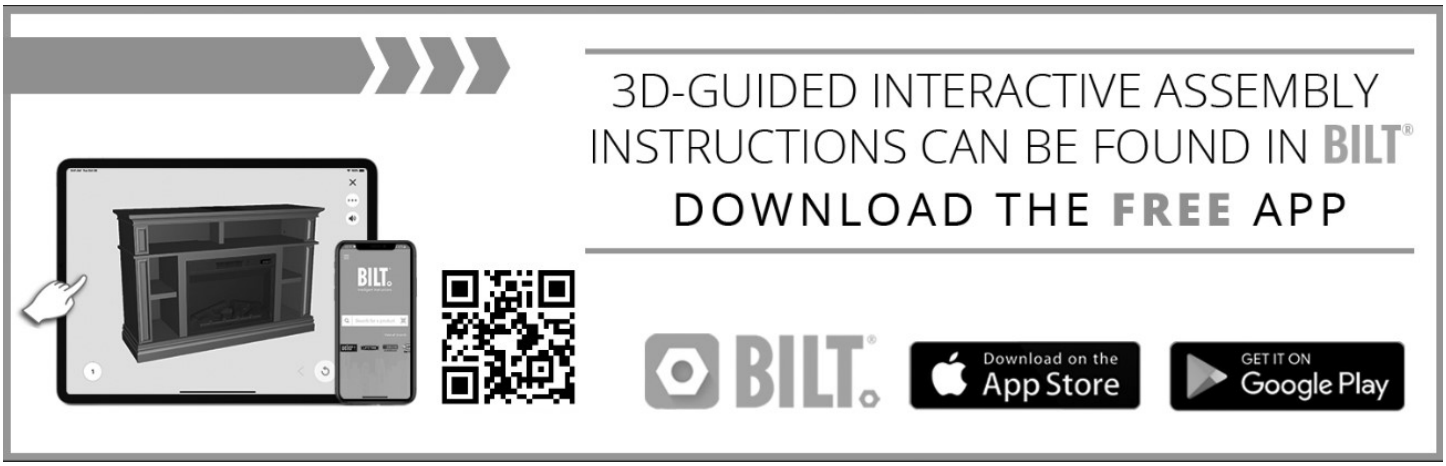

ASSEMBLY INSTRUCTIONS

Wolcott 48in Media Console Electric Fireplace

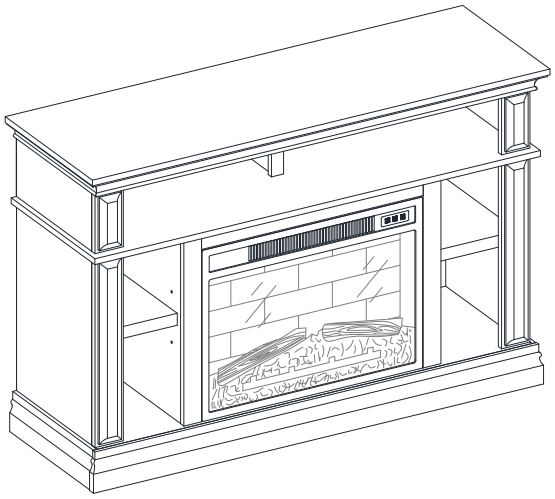

Questions, problems, missing parts?
Before returning to the store, call Customer Service
8 a.m. - 7 p.m., EST, Monday-Friday, 9 a.m. – 6 p.m., EST, Saturday

1-877-527-0313

HOMEDEPOT.COM

THANK YOU
We appreciate the trust and confidence you have placed in StyleWell through the purchase of this electric fireplace/heater. We strive to continually create quality products designed to enhance your home. Visit us online to see our full line of products available for your home improvement needs. Thank you for choosing StyleWell!

Table of Contents

Table of Contents.....2
Safety Information.....2
Warranty 2
Pre-Assembly.....2
Planning Assembly.....2
Tools Required 2
Hardware Included.....3
Package Contents 4
Assembly.....5
Care and Maintenance.....19

Safety Information

□

Please read and understand these instructions before assembling and using this console. Save these instructions for future reference.

MAXIMUM RECOMMENDED WEIGHT LOADS

WARNING: This unit is not intended for use with CRT TVs. Use only with flat panel TVs and audio/video equipment meeting recommended size and weight limits. Never use with larger/heavier than recommended flat panel TVs or equipment. To avoid instability, place flat panel TV in the centre of the unit; the base of the television must be able to rest on the supporting surface of the unit without over-hanging the edges. Improperly positioned flat panel TVs, or flat panel TVs or other equipment that exceed recommended size and weight limits could fall off or break the unit, causing possible serious injury.

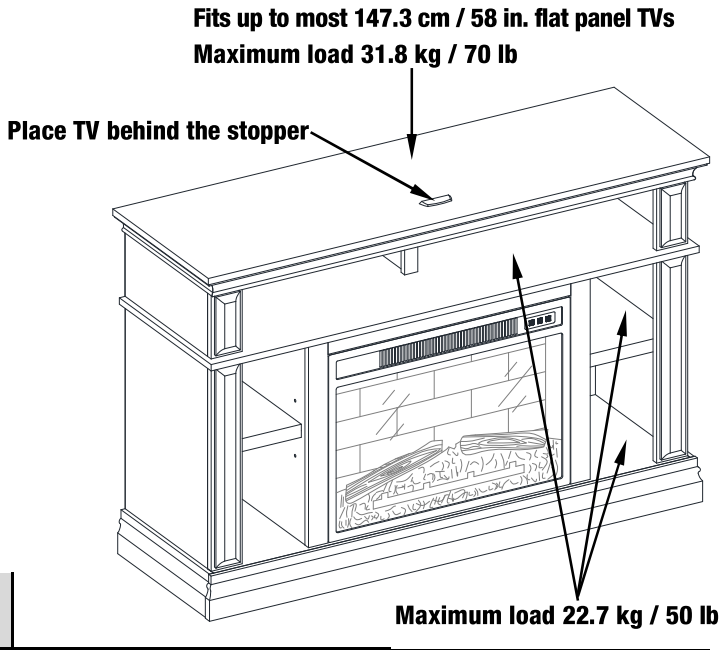

Warranty

We are confident that you will be delighted with this purchase. Should this product be defective in workmanship or materials, or fail under normal use, we will repair or replace it for a period of up to one (1) year from date of purchase.

This warranty gives you specific rights and you may also have other rights which vary from state to state.

Contact the Customer Service Team at 1-877-527-0313 or visit www.HomeDepot.com.

Pre-Assembly

PLANNING ASSEMBLY

Compare all parts with the Hardware Included and Package Contents list. If any part appears missing or damaged, do not assemble this product and contact the Customer Service Team at 1-877-527-0313.

TOOLS REQUIRED

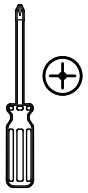

Phillips screwdriver (not provided)

Pre-Assembly (continued)

HARDWARE INCLUDED

NOTE: Hardware not shown to actual size.

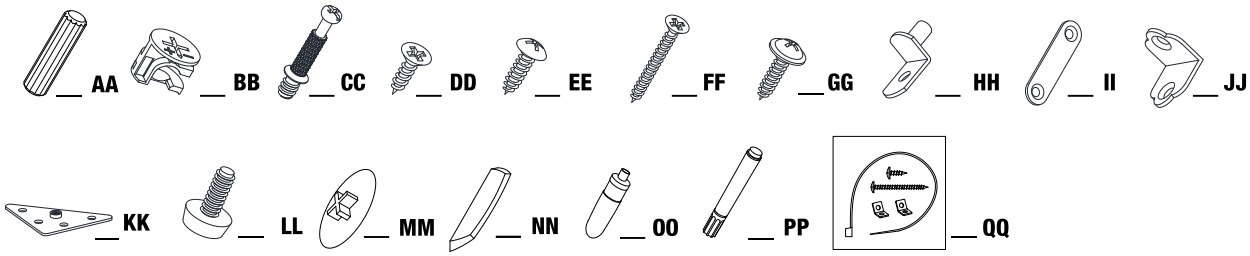

Part	Description	Quantity
AA	Wood dowel	52+2 extra
BB	Cam lock	54+2 extra
CC	Cam bolt	54+2 extra
DD	Short flat head screw	16+1 extra
EE	Short pan head screw	8+1 extra
FF	Long flat head screw	4+1 extra
GG	Washer head screw	32+1 extra
HH	Shelf support	8+1 extra
II	Straight metal plate	2

Part	Description	Quantity
JJ	L shaped metal bracket	2
KK	Triangle metal plate	2
LL	Floor leveler	2
MM	Cam lock cover	38+1 extra
NN	Acrylic stopper	1
OO	Glue	2
PP	Touch-up pen	1
QQ	Tipping restraint hardware kit	2

Pre-Assembly (continued)

PACKAGE CONTENTS

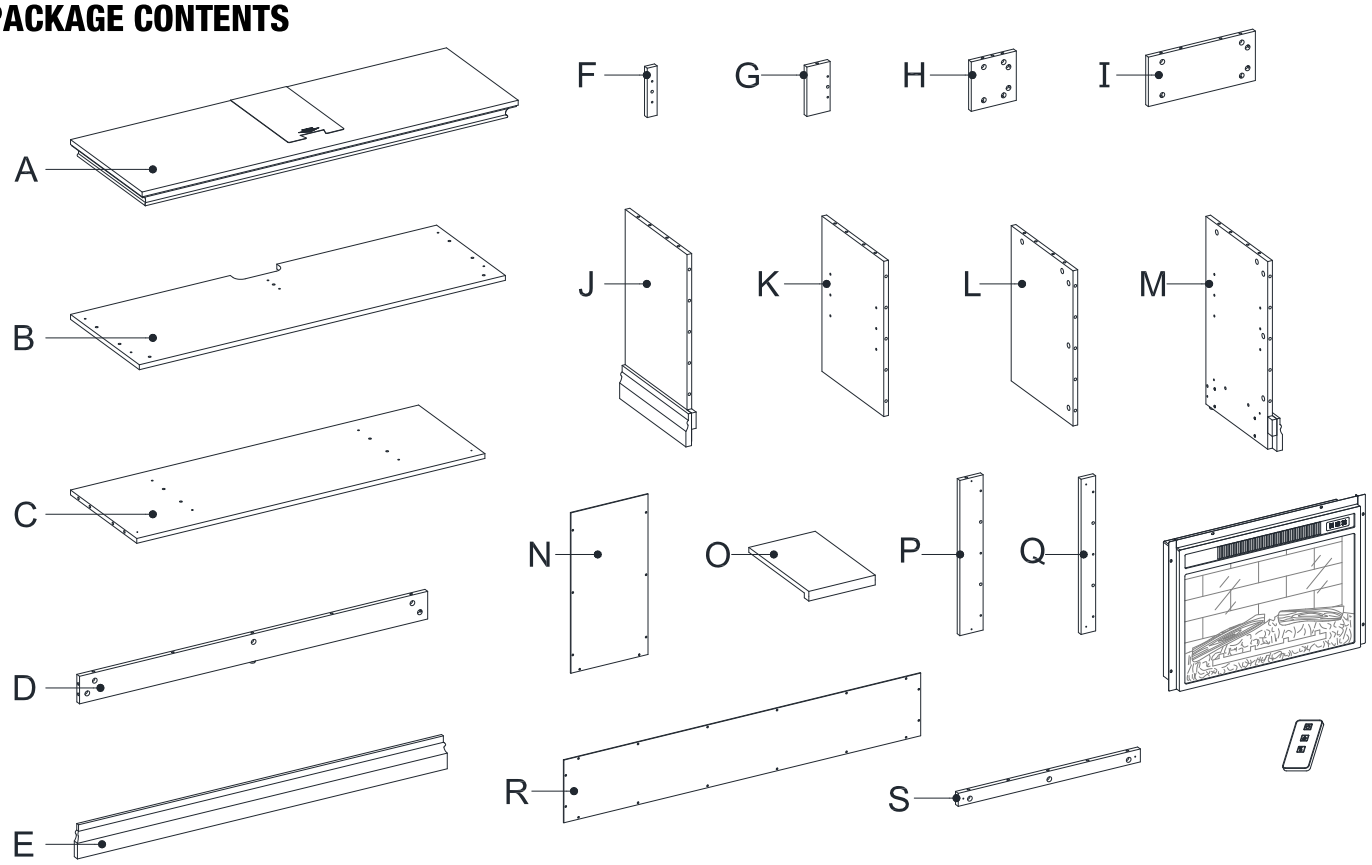

Box 1

Part	Description	Quantity
	Fireplace insert	1
	Remote control with battery	1

Box 2

Part	Description	Quantity
F	Upper partition molding	1
G	Upper side panel molding	2
H	Upper partition panel	1
I	Upper side panel	2
J	Left lower side panel	1
K	Left lower partition panel	1
L	Right lower partition panel	1
M	Right lower side panel	1
N	Lower back panel	2
P	Lower side panel molding	2

Box 3

Part	Description	Quantity
A	Top panel	1
B	Center shelf	1
C	Bottom panel	1
D	Bottom rear stretcher	1
E	Bottom front stretcher	1
O	Adjustable shelf	2
Q	Lower middle stile	2
R	Upper back panel	1
S	Middle crossbar	1

Assembly

1 Screwing the cam bolts

NOTE: Do not fully tighten all bolts until you finish assembling all parts. Once assembled, go back and fully tighten all bolts. This will make the assembly easier.

- ☐ **Unpack the unit and confirm that you have all the hardware and required parts. Assemble the unit on a carpeted floor or the empty carton to avoid any scratches.**
- ☐ **Securely screw the cam bolts (CC) into the designated small holes on the top panel (A) and the lower side panels (J and M) using a Phillips screwdriver.**

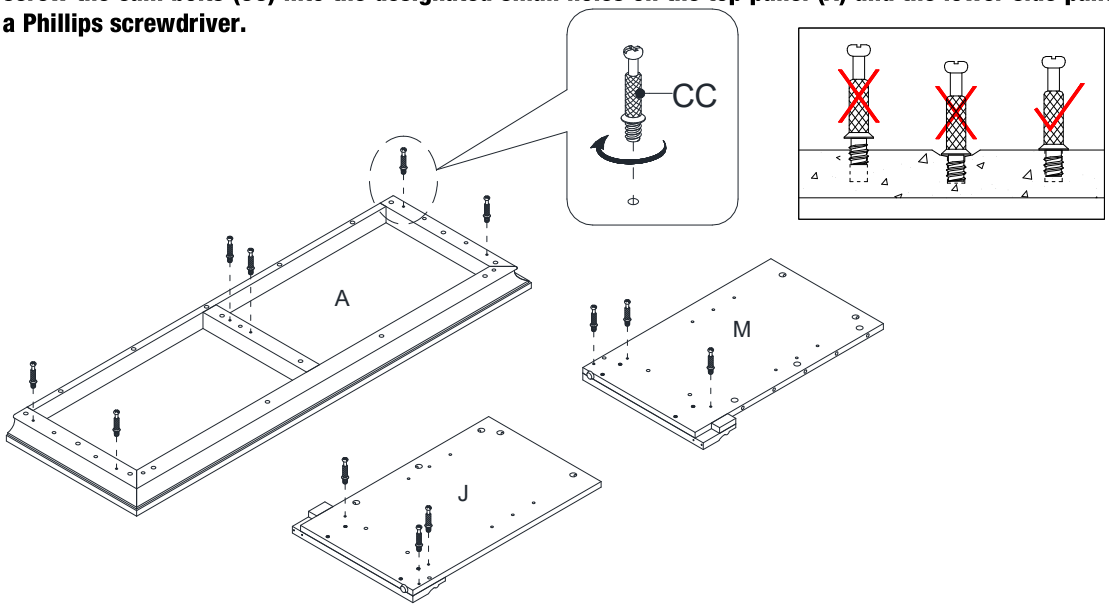

2 Gluing the wood dowels

NOTE: Refer to the dowel guide drawings in this step for further clarification on how to properly glue in the wooden dowels. Apply this method whenever instructed to install wood dowels.

- ☐ **Glue the wood dowels (AA) into the inner holes of the lower side panels (J and M). It is very important to use a small amount of glue on both ends of dowels.**

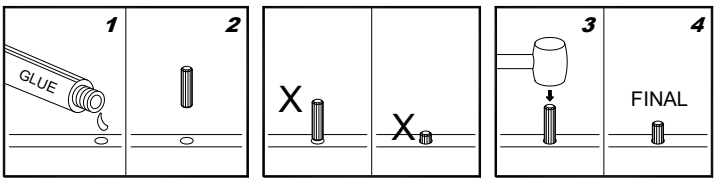

The dowel assembling guide

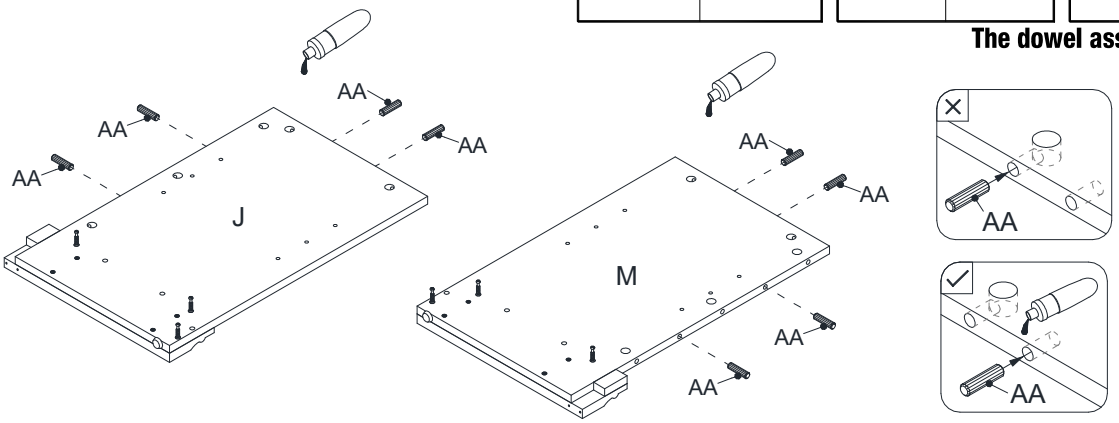

3 Combining the lower side panel moldings with lower side panels

NOTE: Refer to the cam lock assembling guide drawings in this step for further clarification on how to properly install cam locks. Apply this method whenever instructed to install cam locks.

- ☐ **Securely screw the cam bolts (CC) into the designated small holes on the lower side panel moldings (P) using a Phillips screwdriver.**
- ☐ **Attach the lower side panel moldings (P) to the lower side panels (J and M) by engaging three cam locks (BB) respectively as shown.**

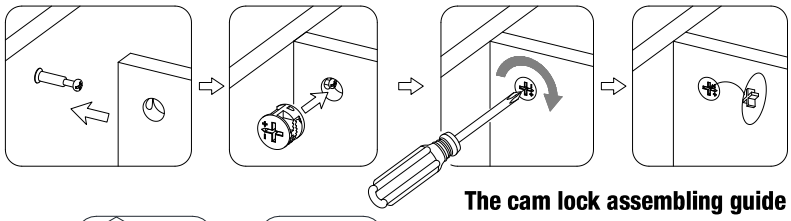

The cam lock assembling guide

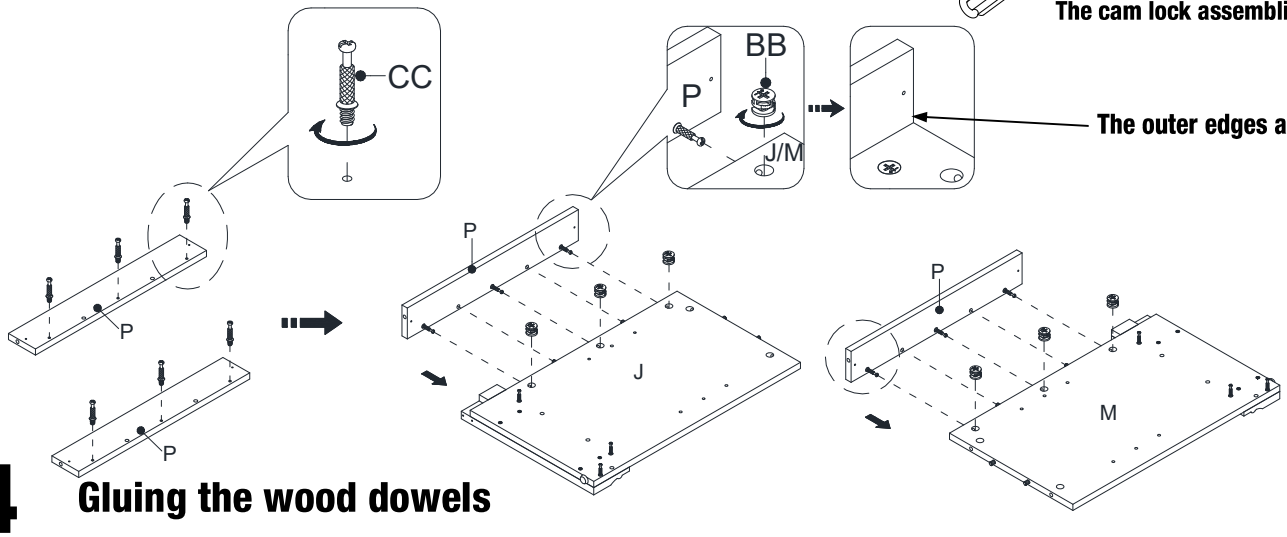

4 Gluing the wood dowels

- ☐ **Glue the wood dowels (AA) into the inner hole of the lower side panel moldings (P) and lower partition panels (K and L) as shown.**

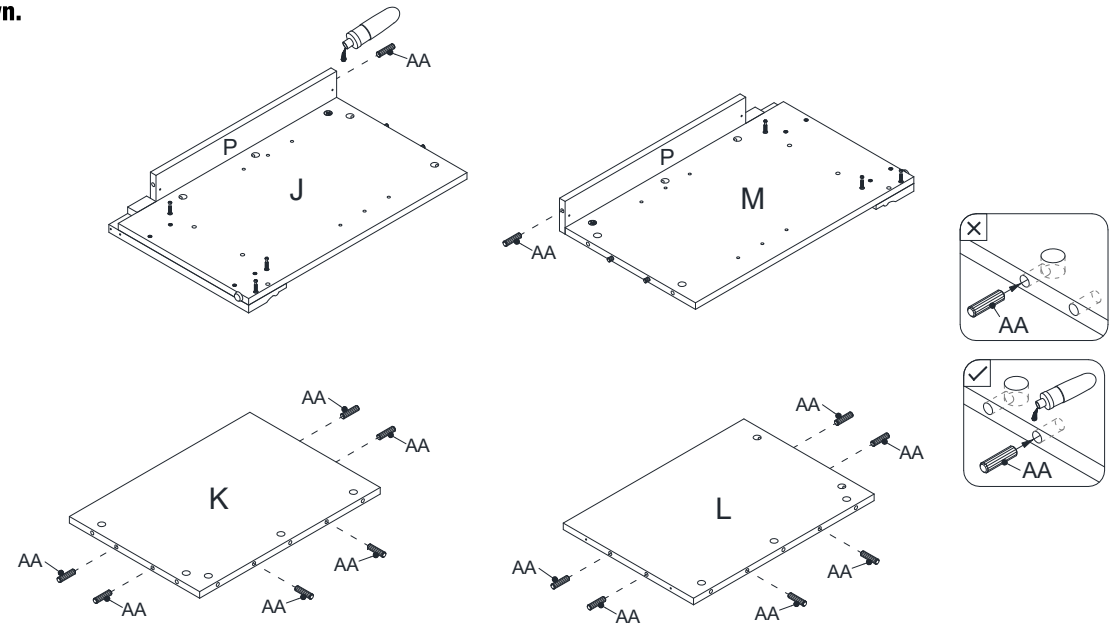

5 Combining the lower middle stiles with lower partition panels

- ☐ **Securely screw the cam bolts (CC) into the designated small holes on the lower middle stiles (Q) using a Phillips screwdriver.**
- ☐ **Attach the lower middle stiles (Q) to the lower partition panels (K and L) by engaging three cam locks (BB) respectively as shown**

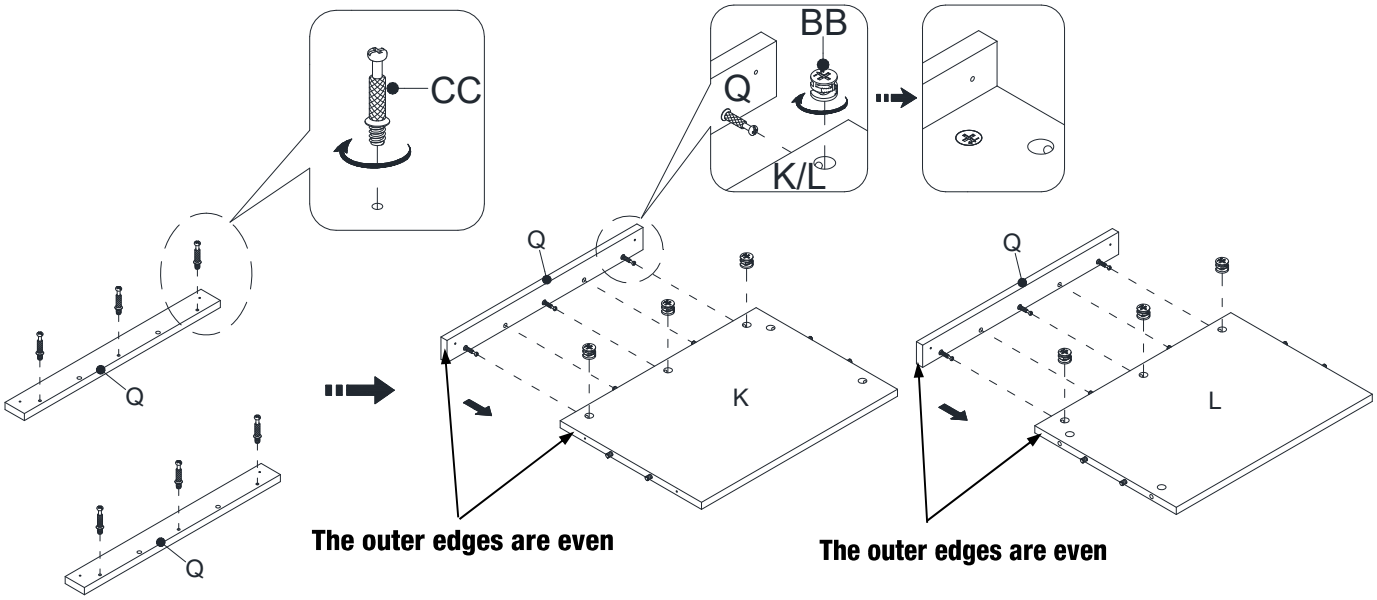

6 Gluing the wood dowels

- ☐ **Glue the wood dowels (AA) into the inner holes on the upper partition panel (H), upper side panel moldings (G) and upper side panels (I) as shown.**

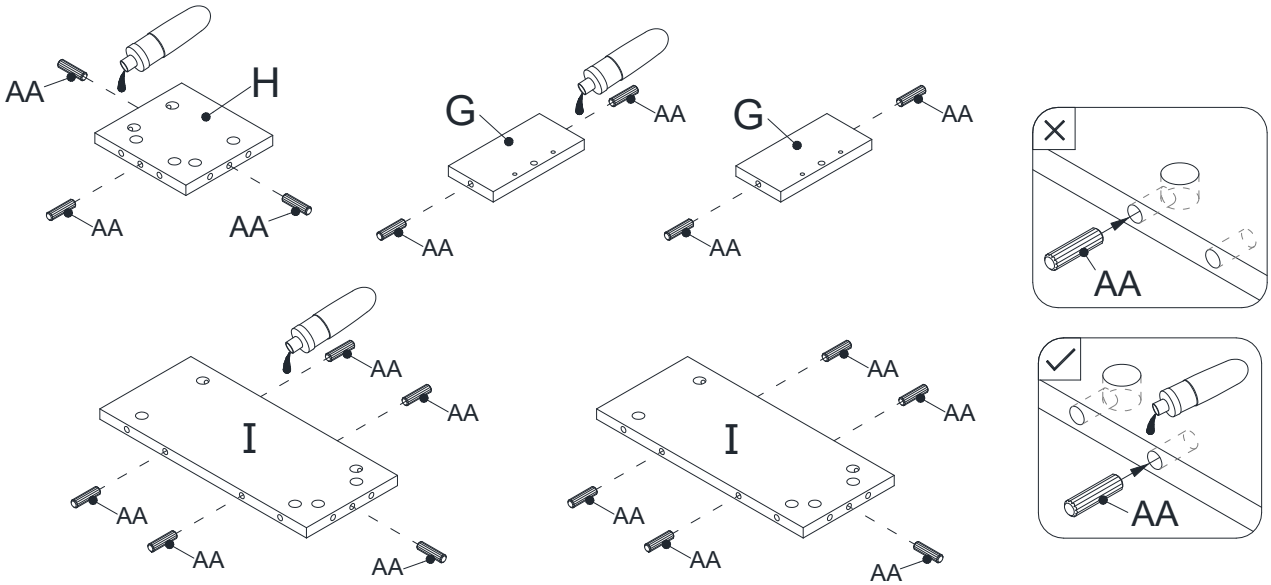

7 Attaching the upper side panel moldings and partition molding

- ◻ **Securely screw the cam bolts (CC) into the designated small holes on the upper partition molding (F) and upper side panel moldings (G) using a Phillips screwdriver.**
- ◻ **Attach the upper side panel molding (G) to each upper side panel (I) by engaing two cam locks (BB).**
- ◻ **Repeat the same step to combine the upper partition molding (F) with the upper partition panel (H).**

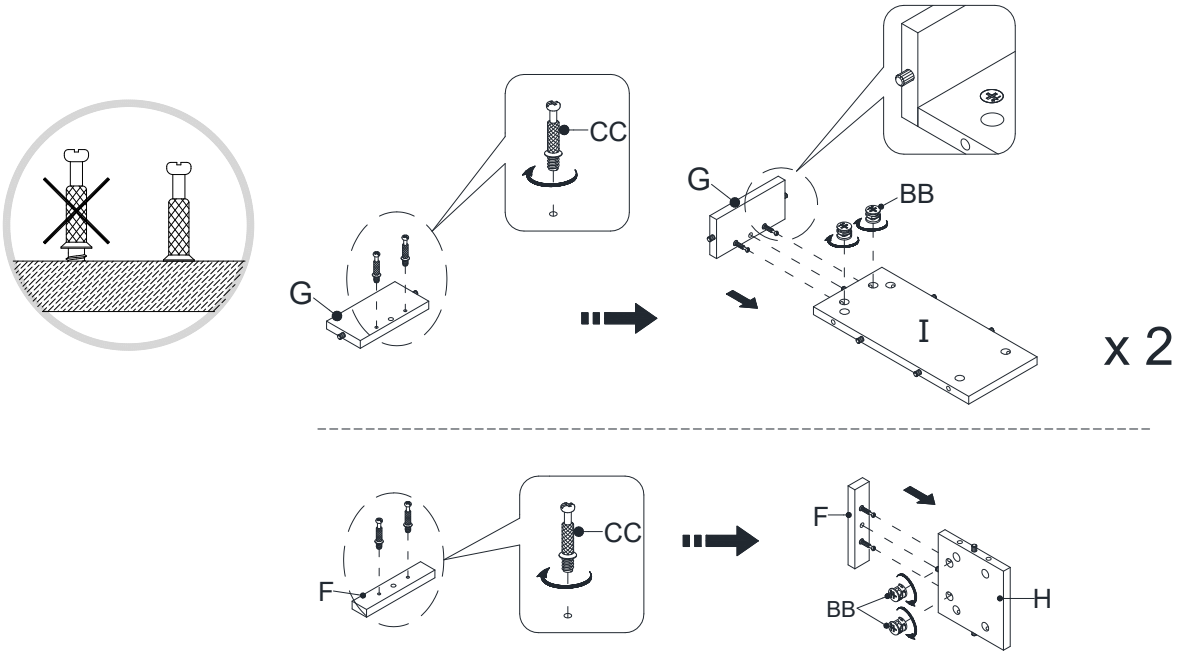

8 Screwing the cam bolts

- ◻ **Securely screw the cam bolts (CC) into the designated small holes on the center shelf (B) and bottom panel (C) using a Phillips screwdriver.**

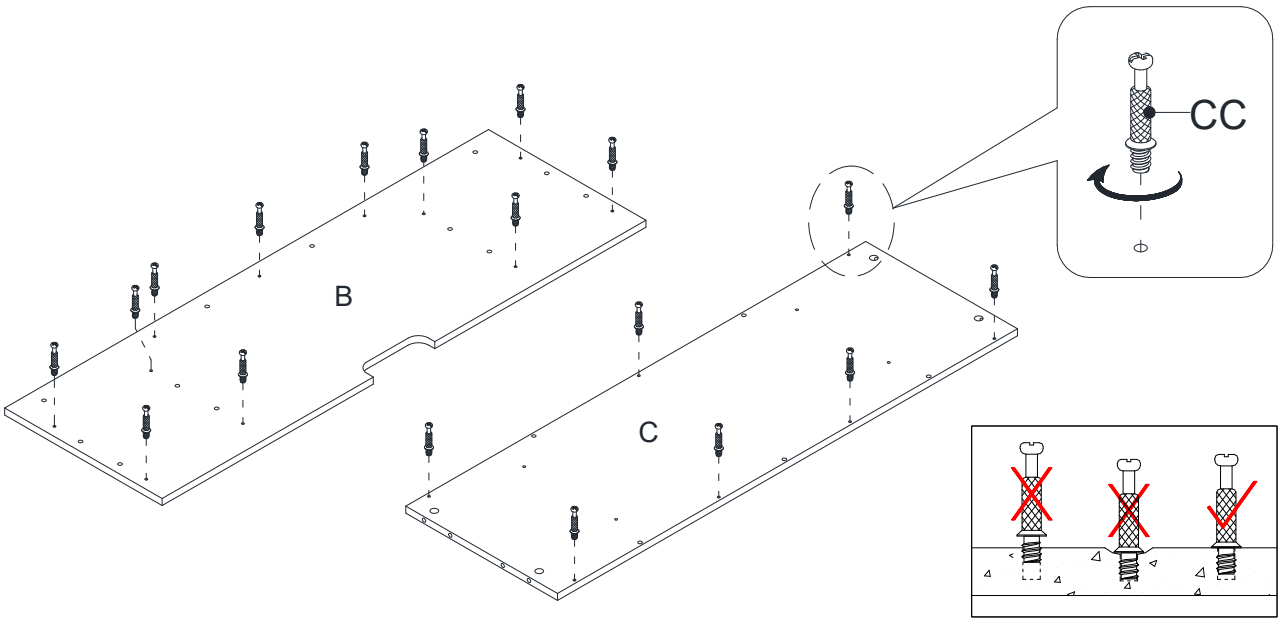

9 Gluing the wood dowels

- ☐ **Glue the wood dowels (AA) into the inner holes on the bottom panel (C), bottom rear stretcher (D), bottom front stretcher (E) and middle crossbar (S) as shown.**

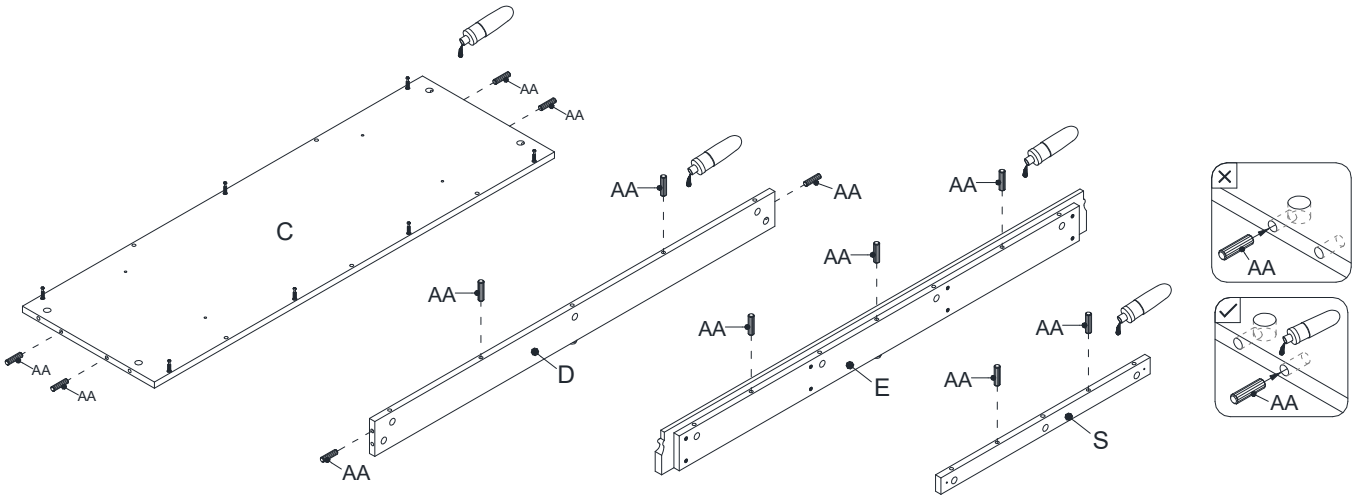

10 Attaching the middle crossbar

- ☐ **Using the wood dowels as a guide, attach the middle crossbar (S) to the center shelf (B) by engaging three cam locks (BB).**

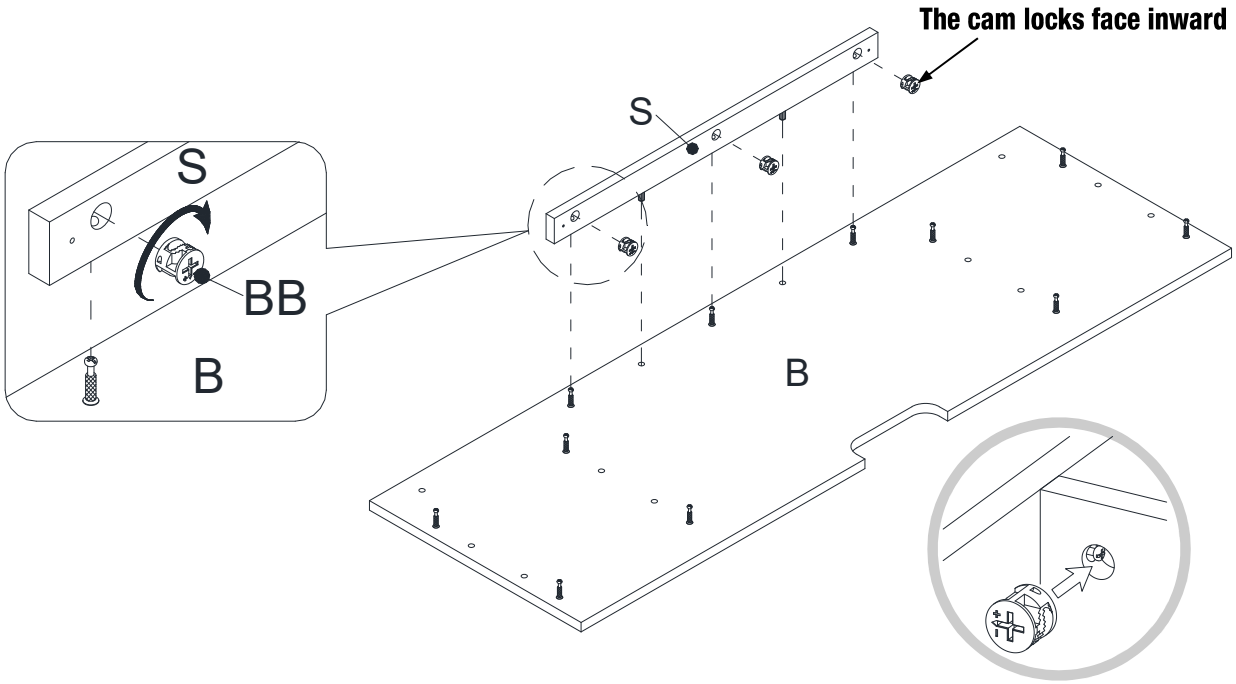

11 Attaching the bottom rear stretcher

- ☐ **Attach the bottom rear stretcher (D) to the bottom panel (C) by engaging three cam locks (BB).**

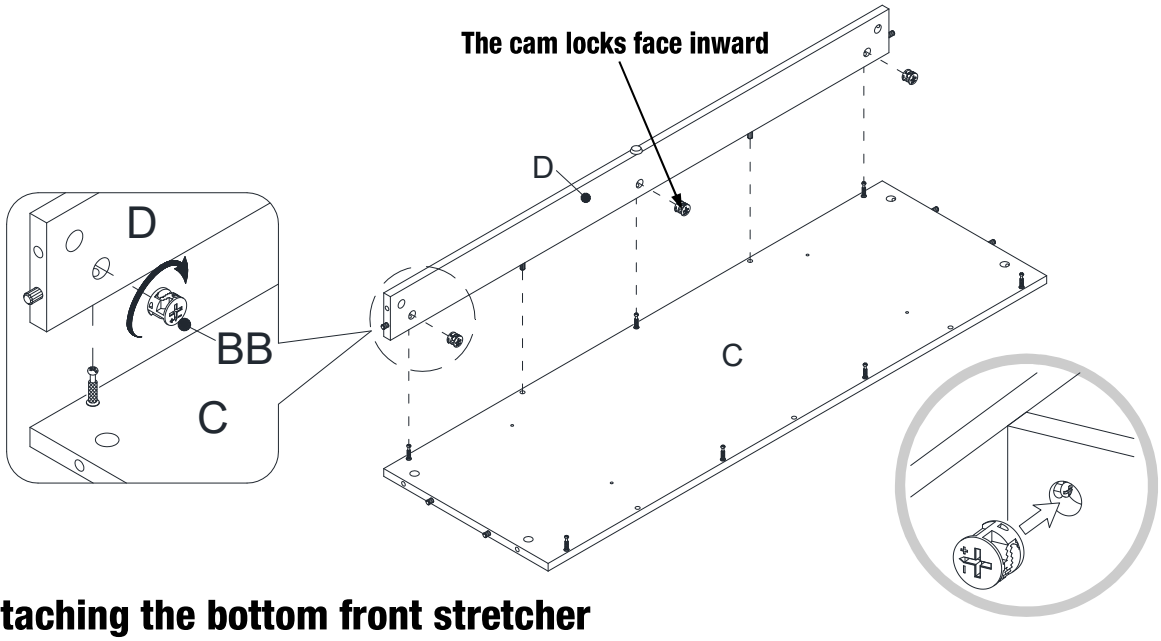

12 Attaching the bottom front stretcher

- ☐ **Using the wood dowels as a guide and attach the bottom front stretcher (E) to the bottom panel (C) by engaging four cam locks (BB).**

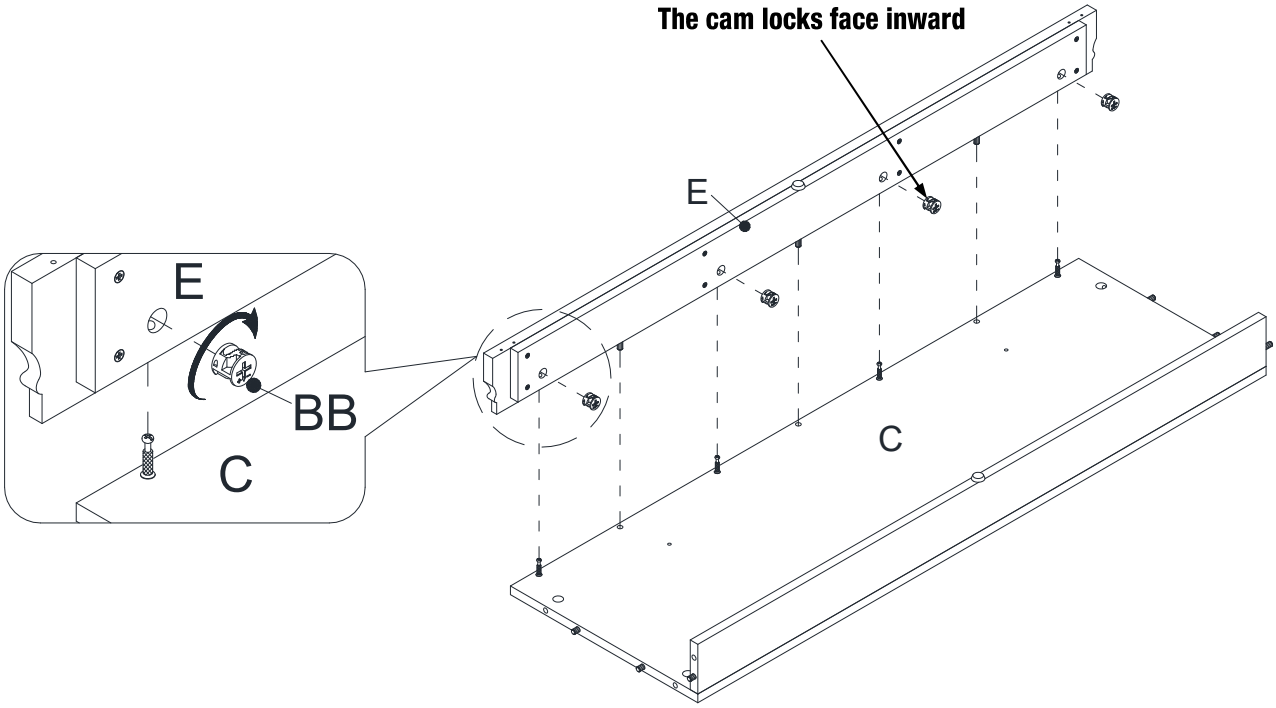

13 Attaching the lower partition panels

- ☐ **Align and attach the lower partition panels (K and L) to the bottom panel (C) with four long flat head screws (FF).**

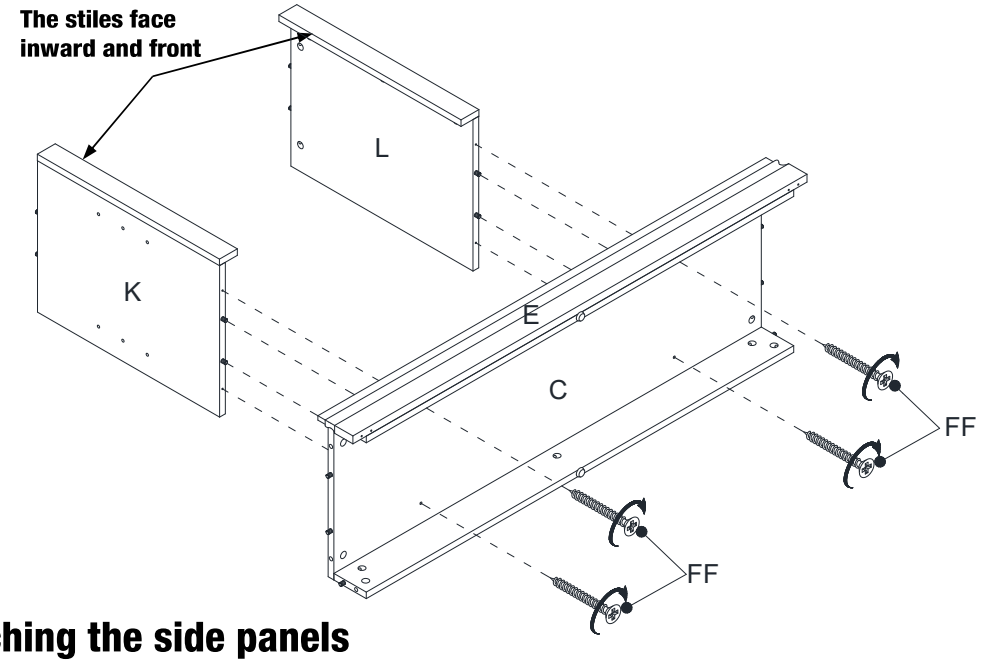

14 Attaching the side panels

- ☐ **Align the large holes on both side panels (J and M) with the inserted wood dowels (AA) and press them together. Attach the side panels (J and M) in place by engaging six cam locks (BB).**

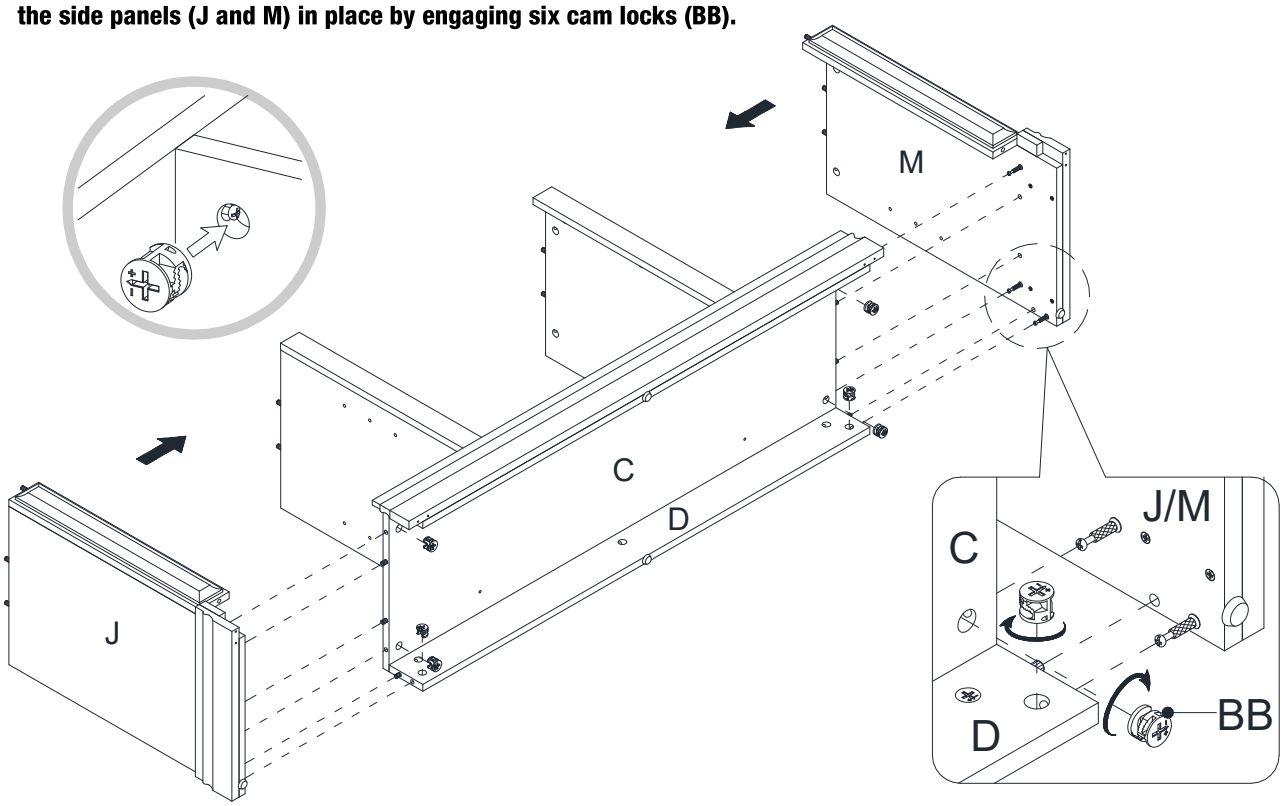

15 Attaching the center shelf

- Ask for assistance to position the center shelf (B) onto the inserted wood dowels (AA) on the vertical panels properly and fasten it in place by engaging eight cam locks (BB).

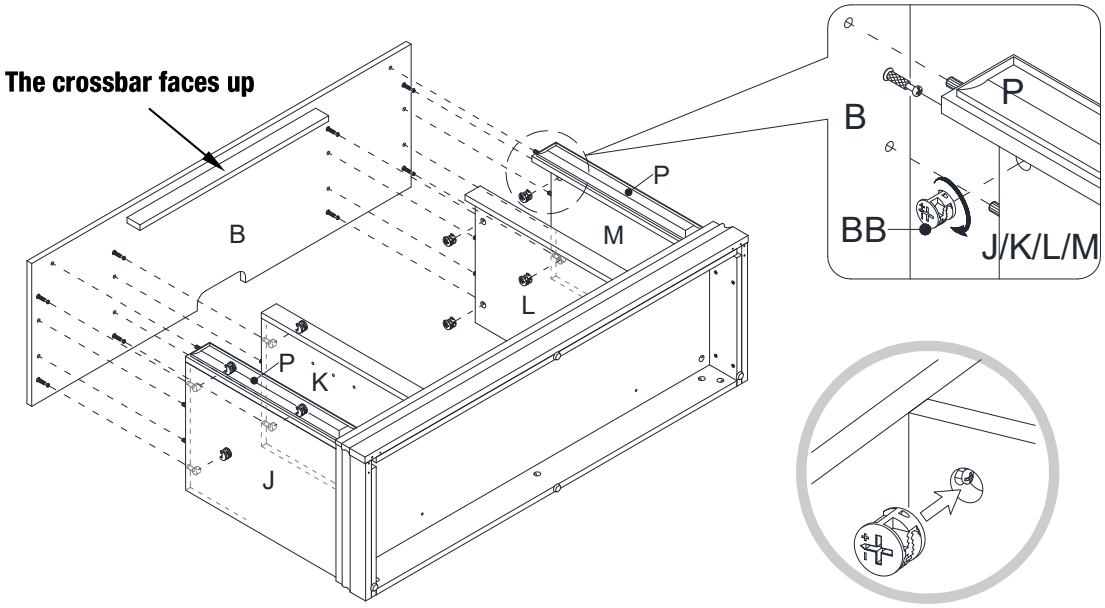

16 Installing the triangle metal plates

- Using the pilot holes as a guide, fasten two triangle metal plates (KK) at the bottom joints between the bottom front stretcher (E) and side panels (J and M) using four short pan head screws (EE) per plate.

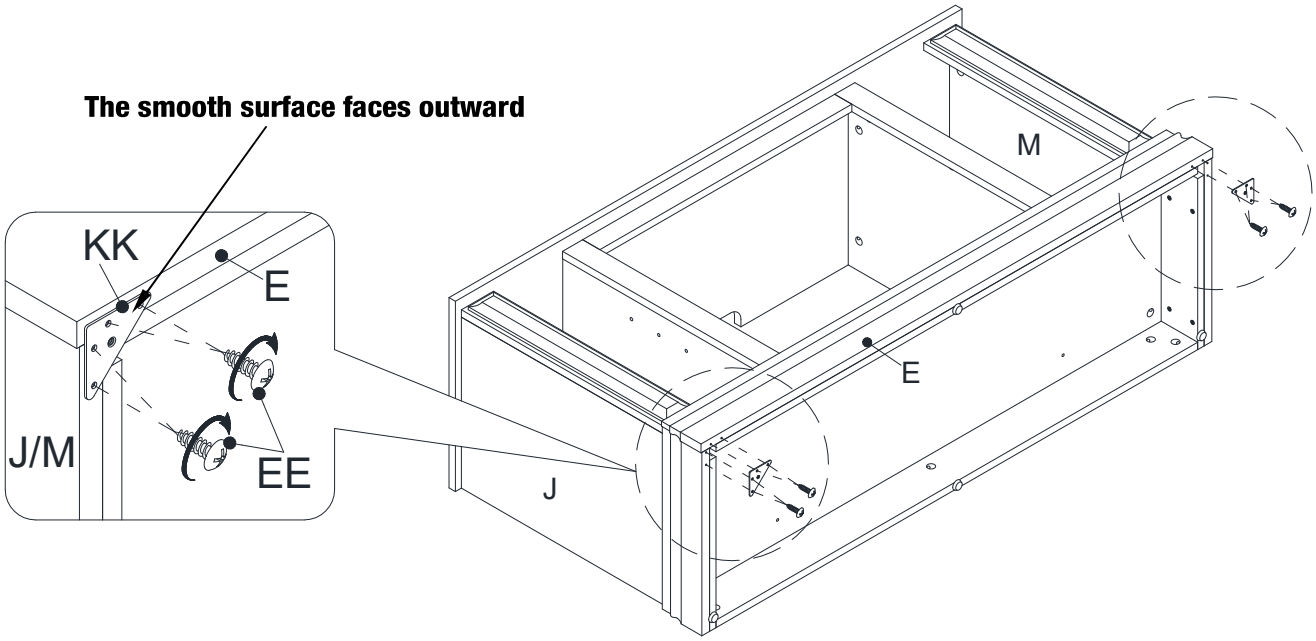

17 Installing the floor levelers

- ☐ **Securely screw the floor levelers (LL) into the threaded sockets on the triangle metal plates (KK). Set the attached floor leveler to the correct height.**

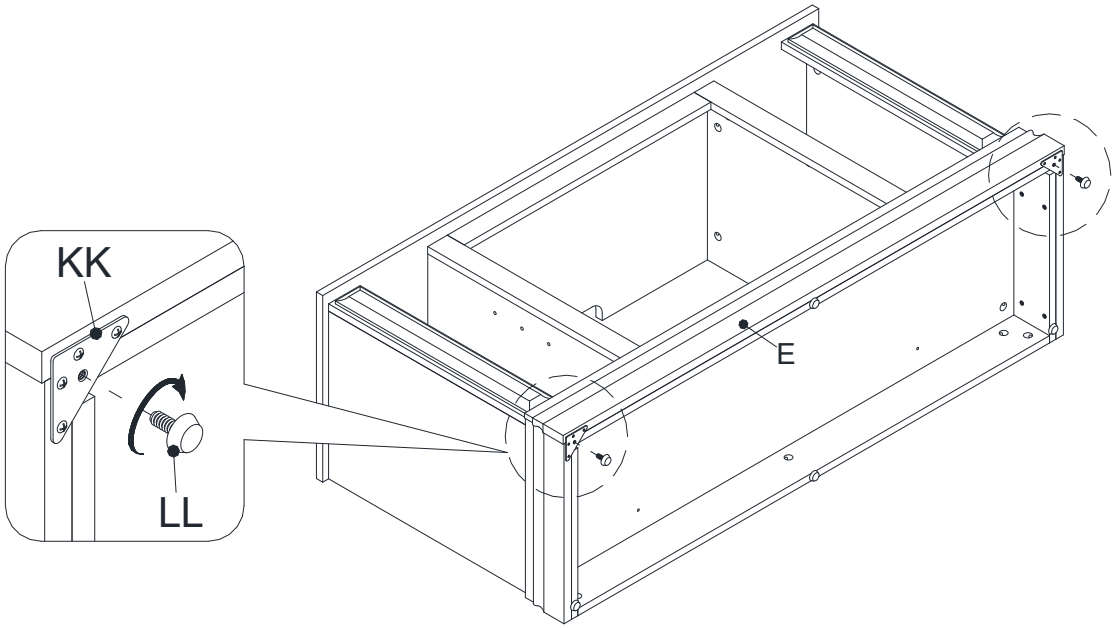

18 Fasten the lower side panel moldings

- ☐ **Ask for assistance to stand the assembled unit upright.**
- ☐ **Using the pilot holes as a guide, fasten the lower side panel moldings (P) to the bottom panel (C) with two L shaped metal bracket (JJ) and four short flat head screws (DD).**

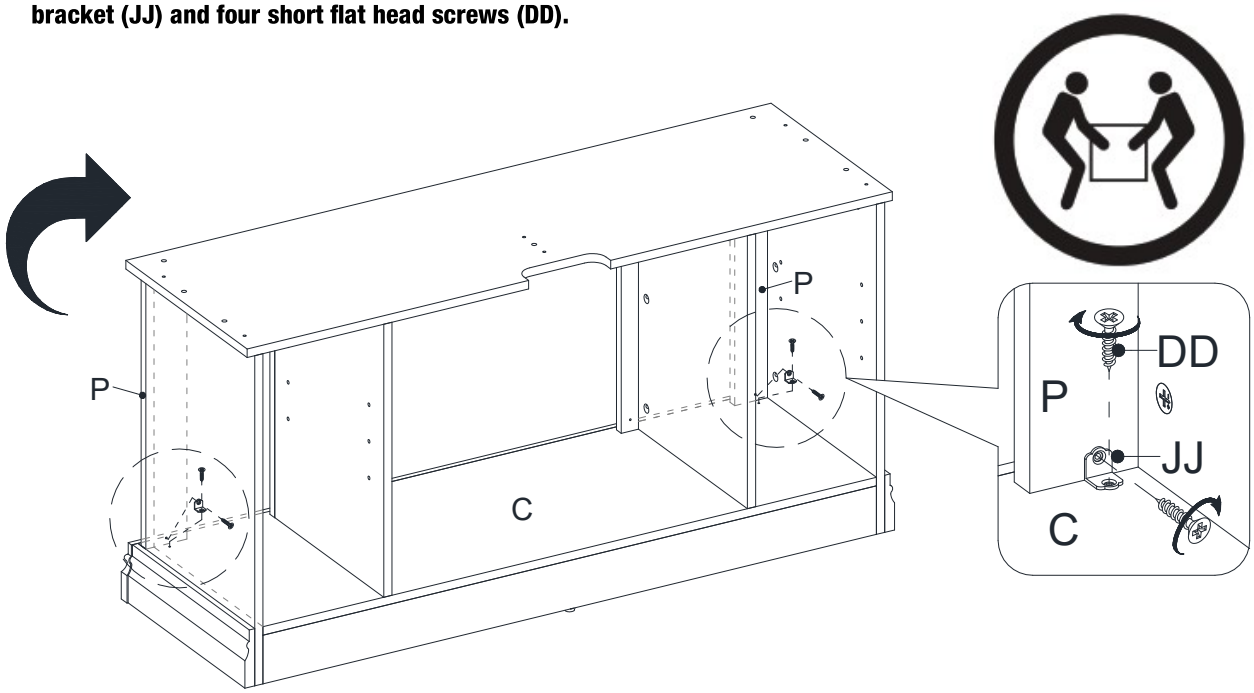

Assembly (continued)

19 Screwing the cam bolts

- ☐ **Securely screw the cam bolts (CC) into the designated small holes on the top face of center shelf (B).**

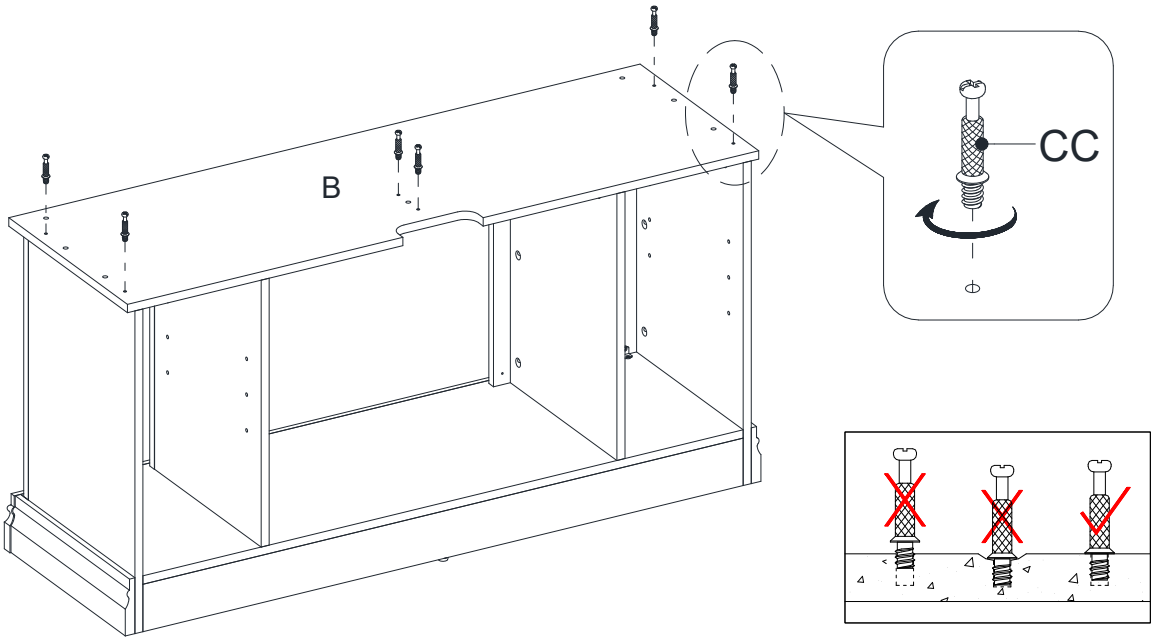

20 Attaching the upper side panels and partition panel

- ☐ **Attach the upper side panels (I) and upper partition panel (H) to the center shelf (B) by engaging six cam locks (BB).**

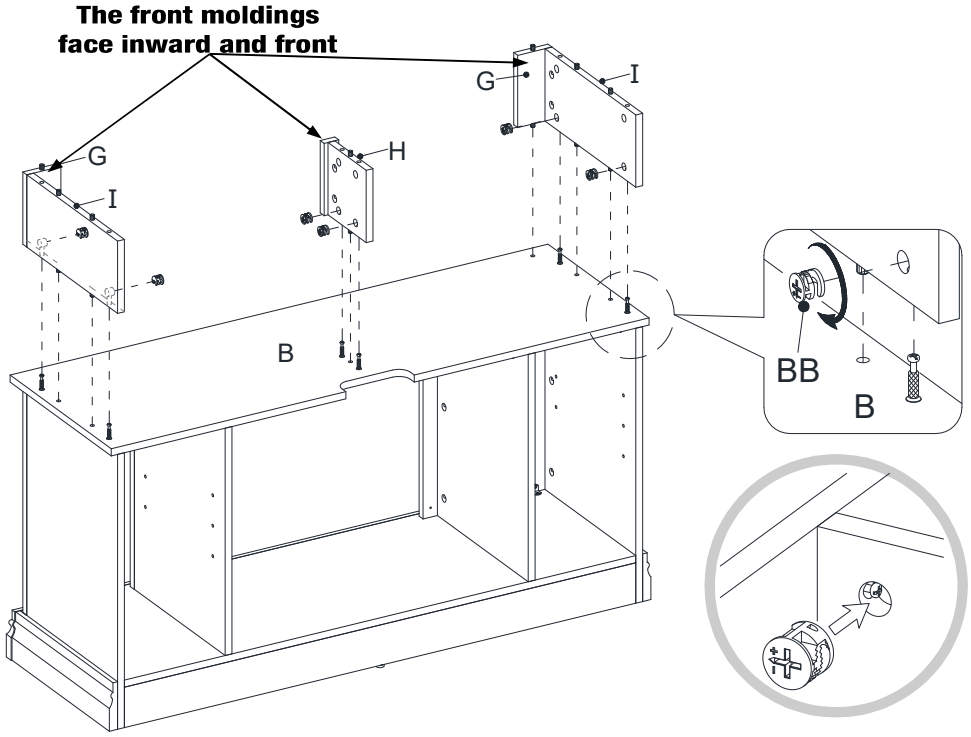

Assembly (continued)

21 Attaching the top panel

- ☐ **Ask for assistance to place the top panel (A) onto the inserted wood dowels (AA) on the vertical panels properly and fasten it in place with six cam locks (BB).**

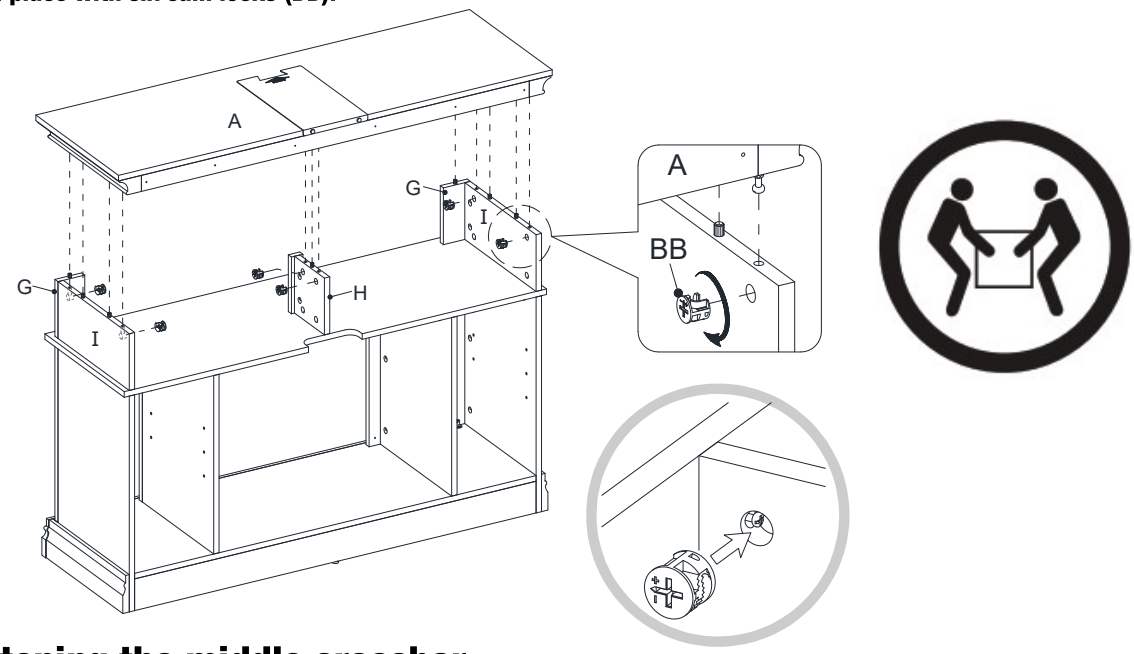

22 Fastening the middle crossbar

- ☐ **Ask for assistance to lay down the unit at its front edge as shown.**
- ☐ **Using the pilot holes as a guide, attach two straight metal plates (II) at the joints where the middle crossbar (S) meets the middle stiles (Q) with four short flat head screws (DD).**

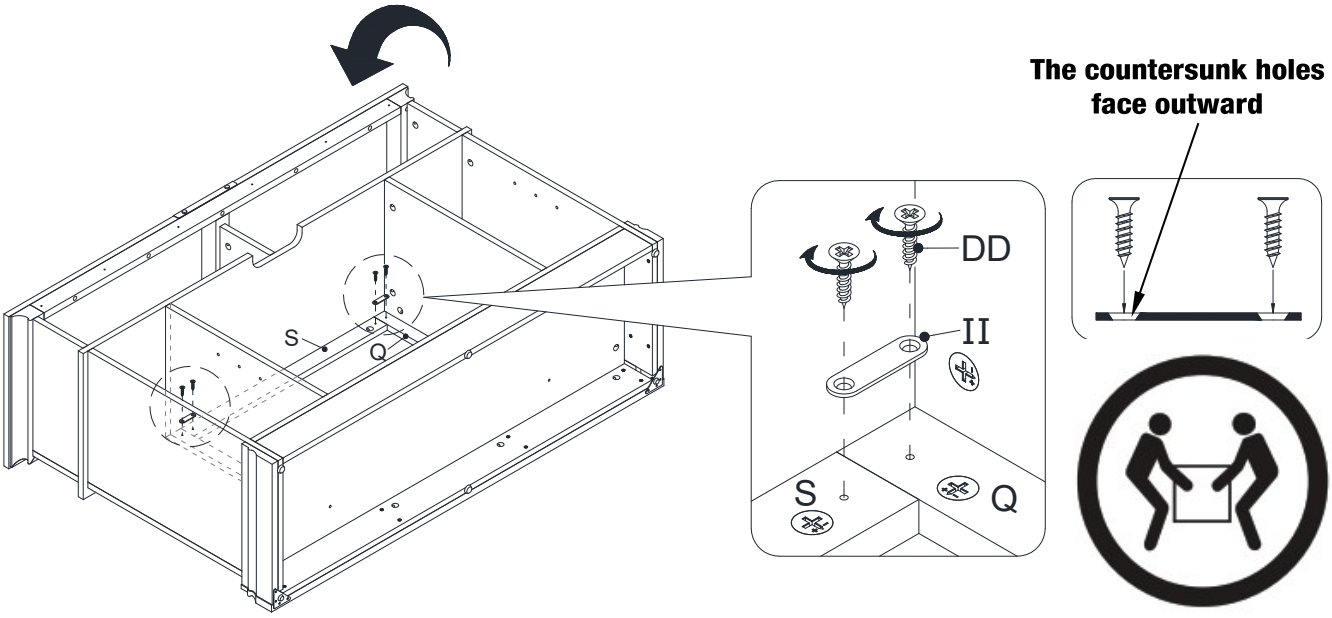

23 Attaching back panels

- ☐ **Pick up the upper back panel (R) and align the pre drilled holes against the upper long edge with the pilot holes on the back stretcher of the top panel (A). Attach it in place using the provided washer head screws (GG).**
- ☐ **Using the pilot holes as a guide, align and attach the lower back panels (N) to the mantel with the provided washer head screws (GG).**

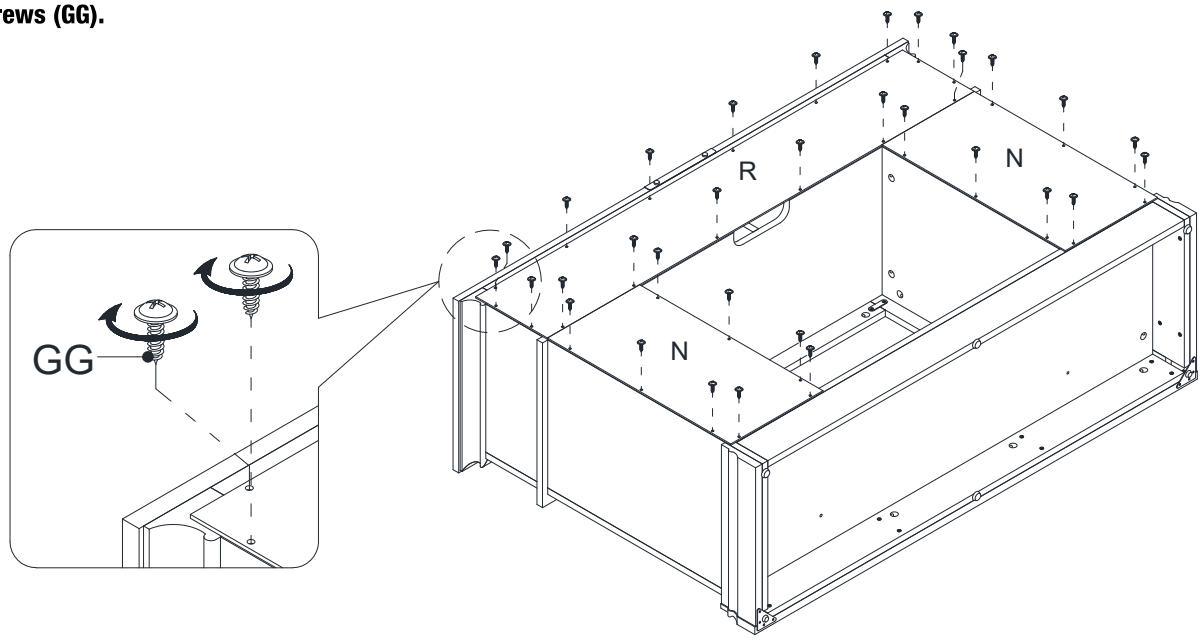

24 Installing the adjustable shelves

- ☐ **Ask for assistance to lift the assembled unit upright and position it near the final location.**
- ☐ **Insert four shelf supports (HH) into the holes at the desired height inside each lower side compartment. Tilt and rest the adjustable shelves (O) onto the shelf supports and secure them into place with short flat head screws (DD).**

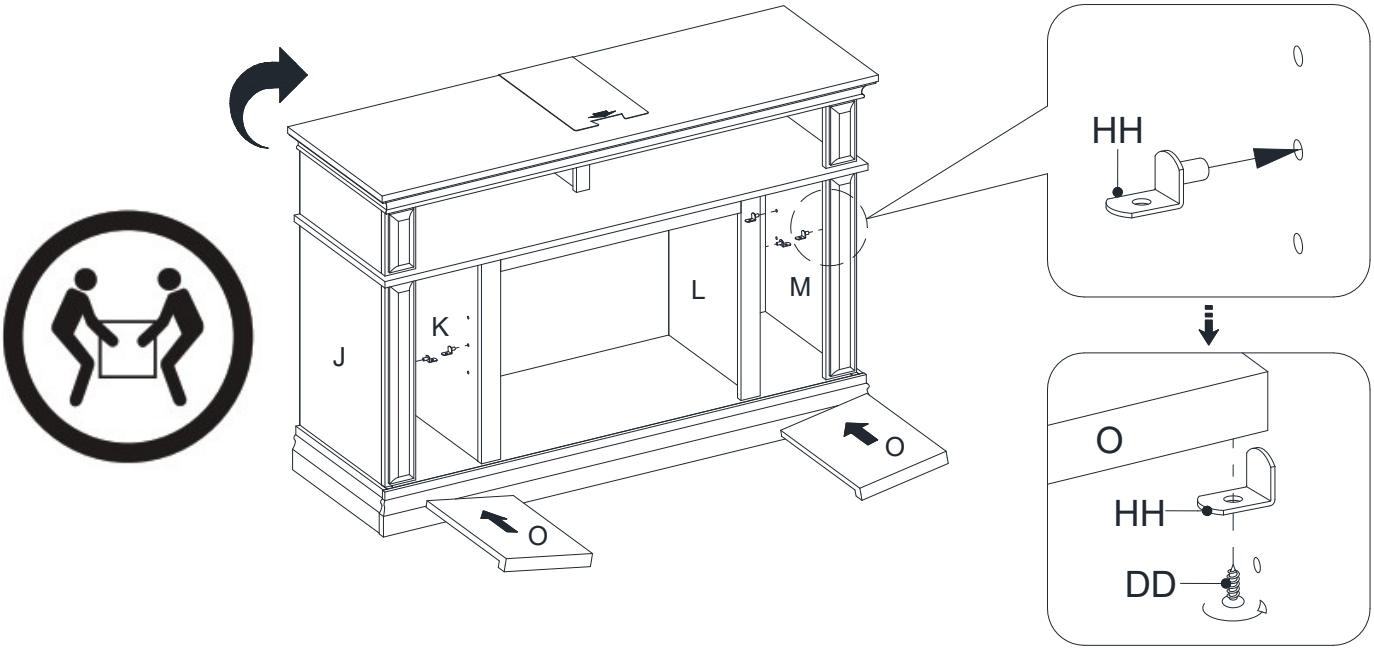

25 Plugging cam lock covers

- ☐ **Plug the cam lock covers (MM) onto the visible cam locks to conceal the cams.**

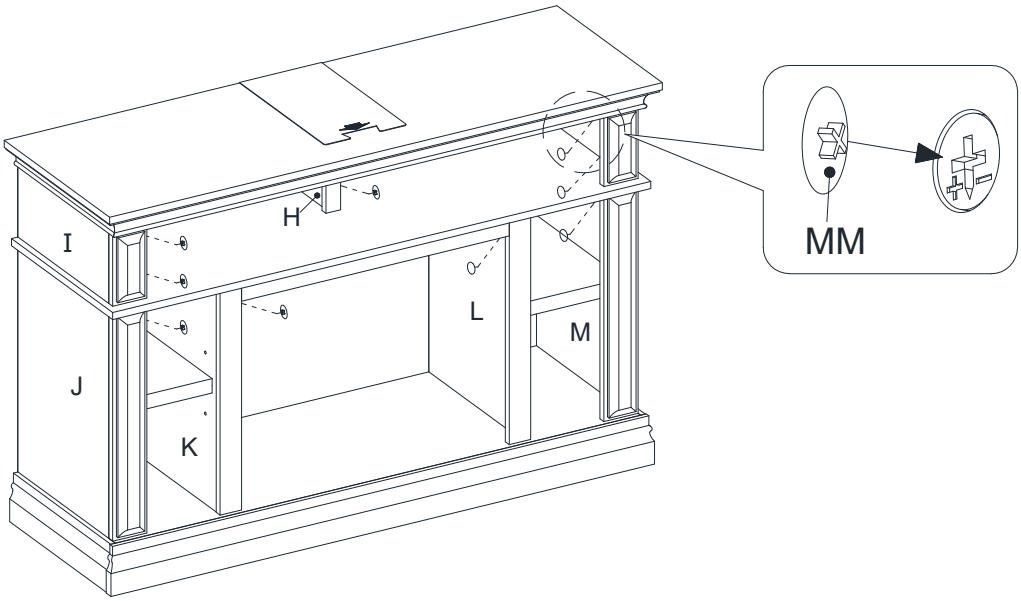

26 Installing the fireplace insert

- ☐ **Unpack the fireplace insert from the inner box and follow the instructions to install the Top Trim and Side Trims to the fireplace insert.**
- ☐ **Lift the fireplace insert carefully into the back of the assembled mantel and center it in the opening. DO NOT drag the insert across the bottom panel (C) as it may scratch the unit.**
- ☐ **Fasten the fireplace insert to the mantel with six insert screws as shown.**

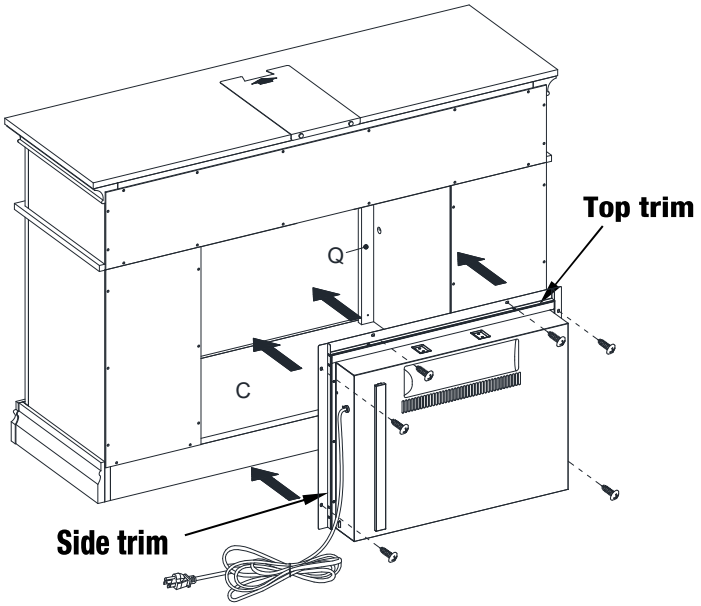

27 Installing the acrylic stopper

- Remove the paper backing of acrylic stopper (NN), then properly align the acrylic stopper into the cut-out on the acrylic stopper template on the front of the top panel (A). Press down on the acrylic stopper to help adhesion.

> NOTE: To prevent your TV from tipping, you must install the acrylic TV stopper if you place a flat panel television on the top panel. Otherwise, skip to next step.

- At the back of top panel (A), grip the heads of plastic tacks with pliers, with twisting motion pull tacks loose to remove the acrylic stopper template.

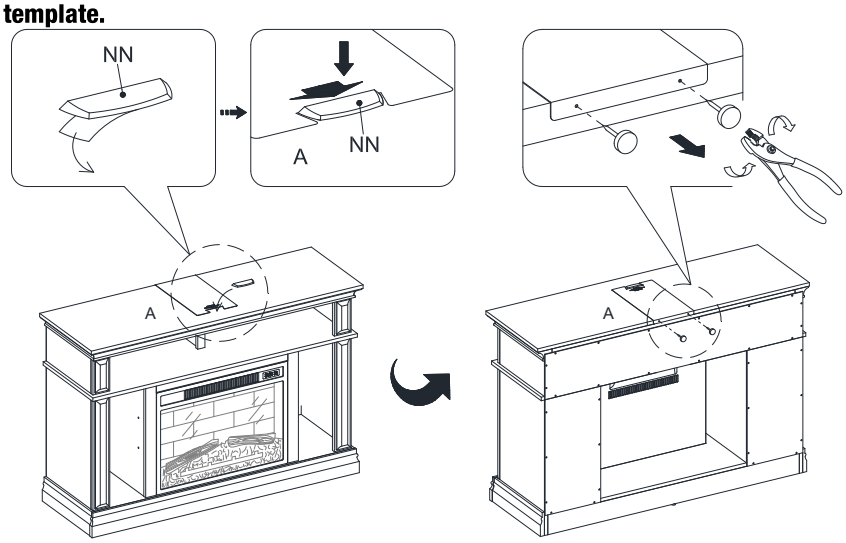

28 Installing the tipping restraint hardware

> WARNING: Young children can be seriously injured by tipping furniture. You must install the tipping restraint hardware with the unit to prevent the unit from tipping, causing any accidents or damage. The tipping restraints are intended only as a deterrent, they are not a substitute for proper adult supervision. The tipping restraints are not earthquake restraints. If you wish to add the extra security of earthquake restraints, they must be purchased and installed separately.

- With assistance, position the assembled fireplace at the desired location against a wall. If necessary, adjust the installed floor levelers (LL) by hand to correct tilting until the unit is level.
- Follow the instructions printed on the plastic bag containing the tipping hardware to attach the tip-over restraint to the unit and the wall.
- Connect the fireplace to the power transformer. Follow the operating manual for the electric fireplace insert to control your fireplace.

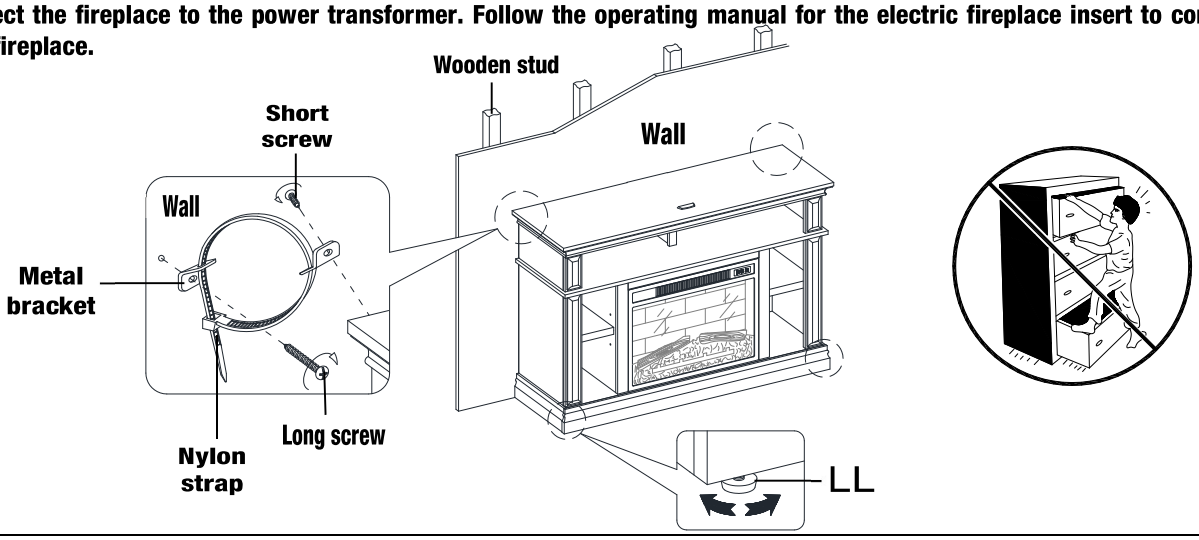

Care and Maintenance

A touch-up pen has been provided to minimize the small nicks or scratches that may occur during assembly or shipping.

To clean and care for your furniture:

- Use a soft, clean cloth that will not scratch the surface when dusting.
- Use of furniture polishes is not necessary. Should you choose to use polishes, test first in an inconspicuous area.
- Using solvents of any kind on your furniture may damage the finish.
- Never use water to clean your furniture as it may cause damage to the finish.
- Always use coasters under beverage glasses and flowerpots.
- Liquid spills should be removed immediately. Using a soft clean cloth, blot the spill gently. Avoid rubbing.
- Always use protective pads under hot dishes and plates. Heat can cause chemical changes that may create spotting within the furniture finish.
- In the event that your furniture is stained or otherwise damaged during use, we recommend that you call a professional to repair your furniture.
- Check bolts/screws periodically and tighten them if necessary.

CARING FOR WOOD FURNITURE

It is best to keep your furniture in a climate-controlled environment. Extreme temperature and humidity changes can cause fading, warping, shrinking and splitting of wood. It is advised to keep furniture away from direct sunlight as sun may damage the finish.

Proper care and cleaning at home will extend the life of your purchase. Following these important and helpful tips will enhance your furniture as it ages.

CLEANING THE FIREPLACE TRIM

Clean the metal trim using a soft cloth, slightly dampened with citrus oil based product and buff with a clean soft cloth. DO NOT use brass polish or household cleaners as these products will damage the metal trim. Citrus oil based products can be obtained at supermarkets or hardware stores.

StyleWell™

Questions, problems, missing parts? Before returning to the store, call StyleWell Customer Service
8 a.m. - 7 p.m., EST, Monday-Friday, 9 a.m. - 6 p.m., EST, Saturday

1-877-527-0313

HOMEDEPOT.COM

Retain this manual for future use.