Specification Sheet

Model No.
RH0408

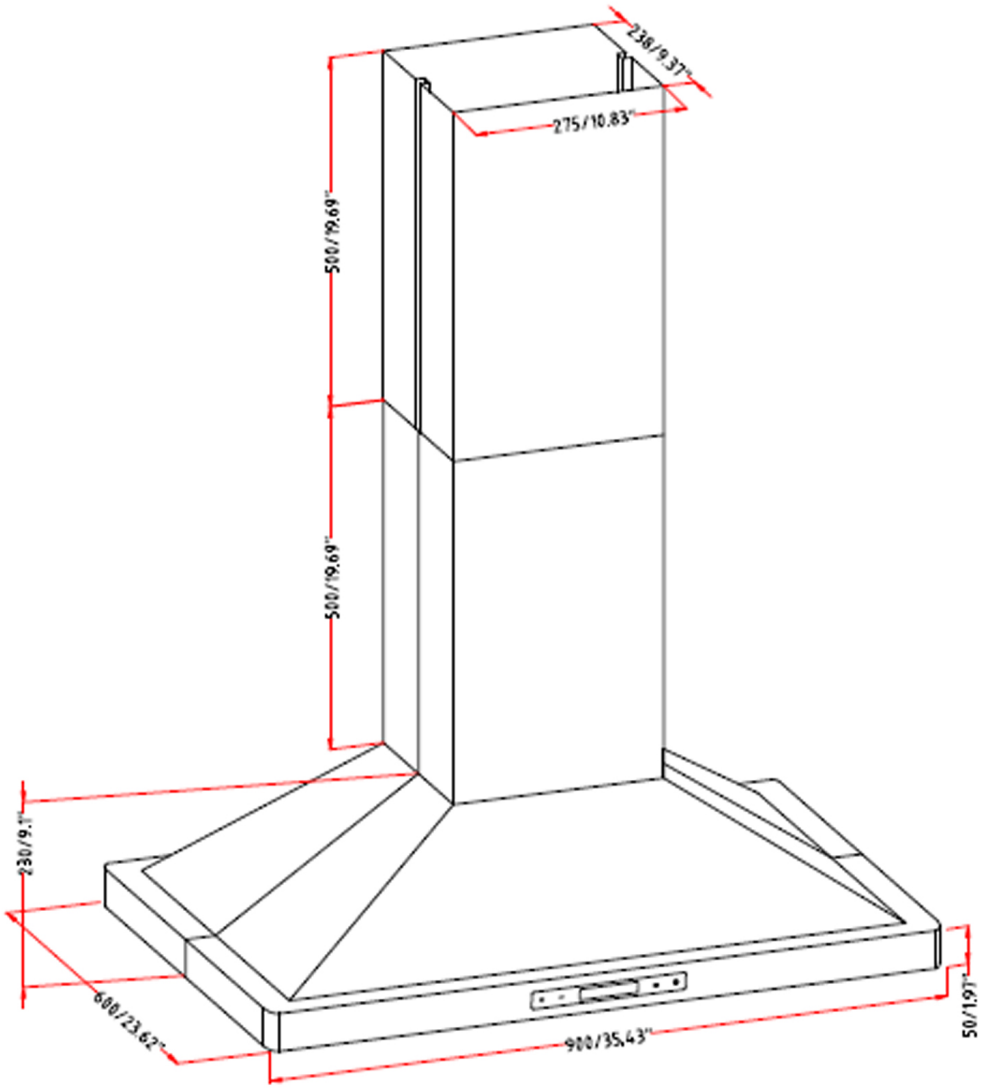

Cutout Dimension	36 Inch
Actual Dimension	35.43"(W) x 23.62"(L) x 48.03"(H)
Min. Drop Down Height	28.79"
Required Ceiling Height	8'-8.5'
Color	Black Stainless steel
Remote Control	No
Speed Setting	3
Air Flow	343 CFM
Control Type	Touch Panel
Clock Type	12 HR
Material	Stainless Steel
Additional Chimney	No

Ventless Option	Yes (Filter Sold Separately)
Voltage	110/120V
Frequency	60Hz
Duct Size (inch)	5.9" - Rounded
Lighting	4 x 1.5W LED LIGHT
Filter Type	Mesh Filters
Glass Color	NA
Blower/Motor	Included
Mounting Type	Island Mount
Noise Level	Less than 60db
Power Cord	3-Prong Power Cord
Warranty	Limited 3-Year Parts Warranty

www.akdyusa.com - All Rights Reserved