RELEXA 100 FIVE
Head Shower 5 sprays
MODEL # 27068

Pure Freude an Wasser

GROHE

GROHE America, Inc | 200 North Gary Avenue, Suite G, Roselle, IL 60172
Phone: +1 (800) 444-7643 | Fax: +1 (800) 225-2778 | us-customerservice@grohe.com



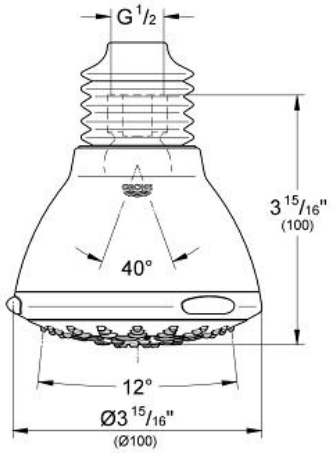

Product Description:
Head Shower 5 sprays

Standard Specification:
- 5 spray patterns: Wide Spray / Needle Jet / Rain / Massage / Champagne
- Ball-joint
- 1/2" NPT Female Threads
- **GROHE DreamSpray®** perfect spray pattern
- **GROHE StarLight®** finish
- **SpeedClean®** anti-lime system
- **Inner WaterGuide** for a longer life
- Max Flow Rate 2.5 gpm at 80 psi (9.5 L/min)

Applicable Codes & Standards:
- Energy Policy Act of 1992
- ASME A112.18.1/CSA B125.1

Color:
- ❑ 27068 000 chrome
- ❑ 27068 EN0 brushed nickel
- ❑ 27068 ZB0 oil rubbed bronze