ultrasite™

A PLAYCORE Company

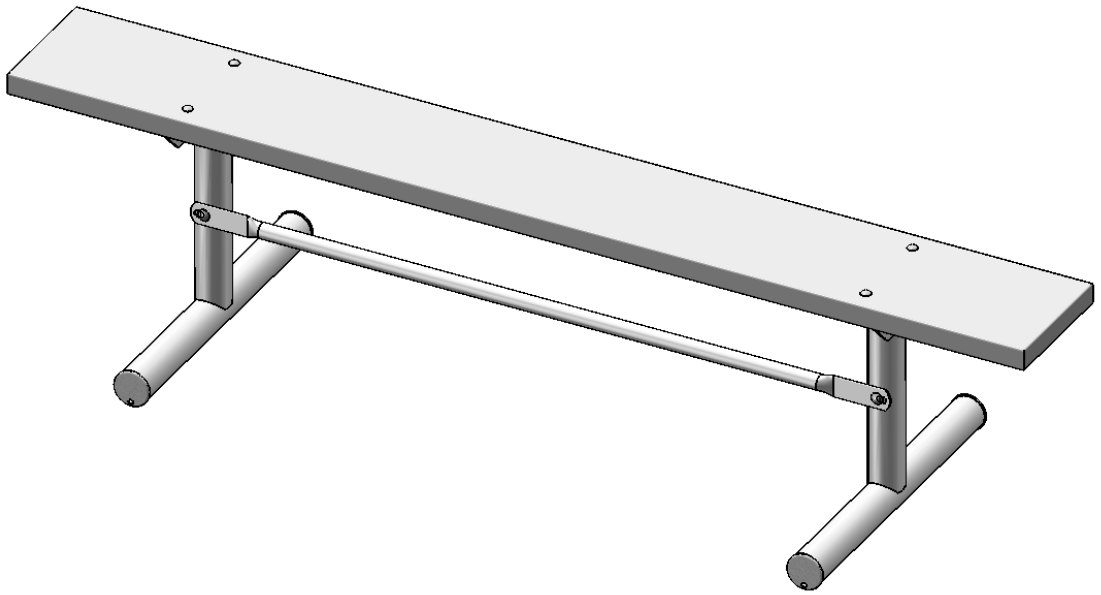

Model # 942P-R6

1675 Locust Street
Red Bud, IL 62278
Phone: 618-282-8200
Fax: 618-282-8202

WARRANTY & TERMS

WARRANTY: 5 Year Limited Warranty on Thermoplastic coated elements. Ultra Play guarantees all items for one full year to be free of defects in workmanship or materials when installed and maintained properly. We agree to repair or replace, any items determined to be defective. Items specifically not covered by this warranty include vandalism, man made or natural disasters, lack of maintenance, normal weathering or wear and tear due to public abuse.

Damages or loss in transit is the responsibility of the carrier, whether visible or concealed. It is the responsibility of the recipient to assure that the order is received complete. Before signing the delivery receipt, inspect the shipment immediately and completely. Note any damages or shortages on the bill of lading. Damage reports must be filed within 10 days. Ultra Play is NOT responsible for damages or loss in transit. Title to all goods passes to the customer at the time of shipment. Ultra Play will assist in filing claims if the freight arrangements were made by Ultra Play at your request.

CANCELLATIONS AND RETURNS: Cancellations are only accepted with approval of Ultra Play. No merchandise shall be returned without a Return Goods Authorization number which is issued by customer service. Any authorized merchandise must be carefully packed and received in saleable condition. A restocking charge of up to 25% will be applied to all returned goods when the error is not the fault of Ultra Play. All returns must be shipped freight prepaid.

A PLAYCORE Company

SAFETY WARNINGS & EQUIPMENT INSPECTION

- Owners and installers please note these safety warnings and make use of this checklist on a regular basis.
- Follow installation instructions when erecting equipment.
- Ground surfaces around equipment should be restored as needed. Concrete footings should never be exposed. Surface depth should comply with ASTM and CPSC specifications.
- Check for and repair damage caused by wear or vandalism, a major factor in injury causing situations.
- All protruding bolts should be covered or cut off and finished smooth. Sharp edges on pipes should be capped or removed. Check for bent, broken, or severly worn pipe, and replace.
- All equipment should be free of rust and repainted whenever necessary to deter rusting.
- We provide our customers with layout sheets and installation instructions. Please keep on file the specifications sheet that contains the listing of every part used.
- Never add components not intended for use with this product.
- Regular maintenance is necessary in this and all park and recreational equipment to insure the safety of the user.
- Note: Proper maintenance of equipment requires regular tightening of all bolts, nuts, and setscrews.
- Note: Regular checking of all parts, castings, etc. should be made. If a part is broken or worn, it shoud be replaced immediatly.
- Check to be sure all fittings are tight and that bars and pipes do not move.
- Replace all worn S-hooks. S-hooks must be completely closed. Failure to close S-hooks can result in serious injury to the user. NEVER reuse S-hooks.
- Test for free movement of swing hanger and other moving attached parts.
- Check for worn chains and replace them.
- A soft resilient surface should be placed under all swings extending at least twice the height of the top rail both front and back.

HARDWARE

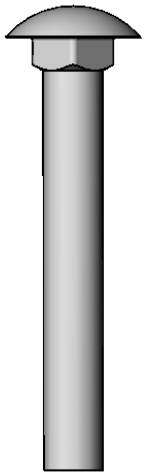

5/16" x 2-1/4"
Carriage Bolt

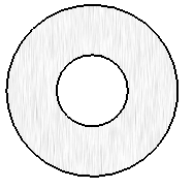

5/16" Washer

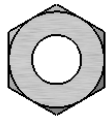

5/16" Hex Nut

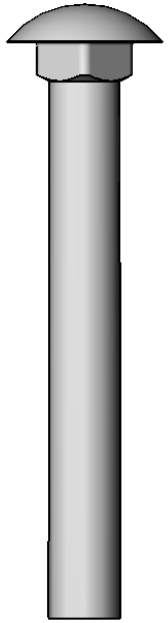

3/8" x 3"
Carriage Bolt

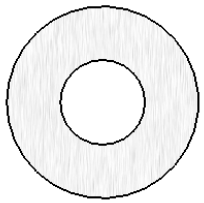

3/8" Washer



3/8" Hex Nut

TOOLS REQUIRED

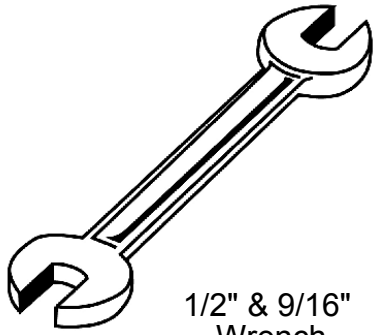

1/2" & 9/16"
Wrench

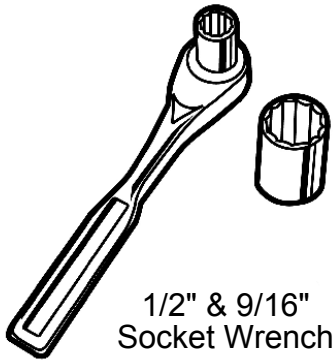

1/2" & 9/16"
Socket Wrench

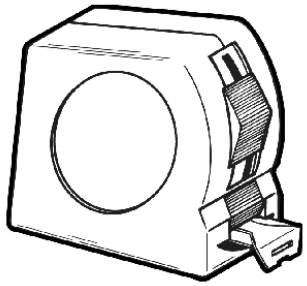

Tape Measure

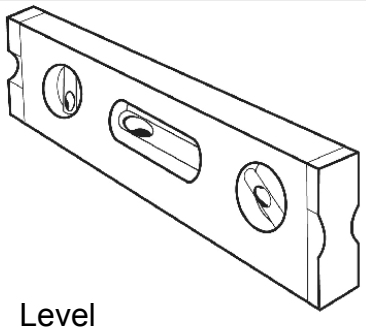

Level

942P-R8
PORTABLE BENCH WITHOUT BACK

Seats: Minimum of 96% commingled post-consumer or post-industrial recycled plastic 2x10. With a maximum of 4% due to various additivies including color and UV stabilization to obtain desirable properties. Two 1”x1/4” steel flat strips are inserted into each plank for additional support.

Frame: 2-3/8” O.D. x 12 gauge pre-galvanized structural steel tubing. Seat mounting points are 2” x 2” x 7 gauge precision punch steel angle. All electrically MIG welded.

Frame Coating: Electrostatic powder coated application oven cured or hot dipped galvanized.

Hardware: All hardware fasteners are zinc coated.

Dimensions: 6’ bench portable without back. Seats are 9-1/4” wide x 72” long. Seat height is 17-1/2”. Outside Dimensions are 72" long x 22" wide.

COMPONENTS

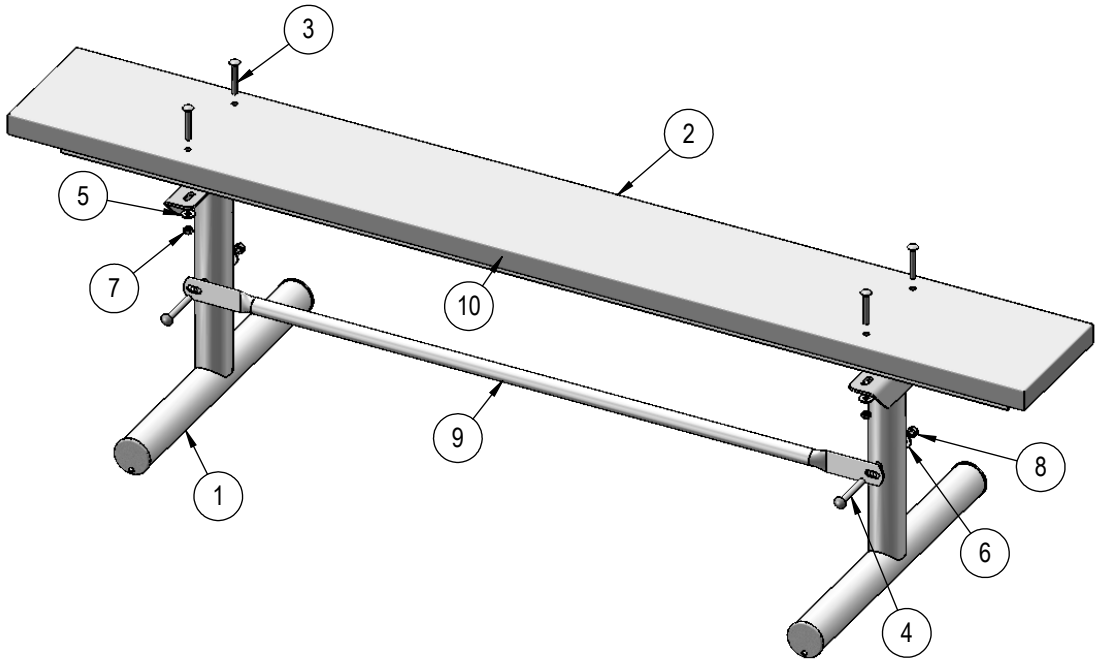

Insert the 6' Recycled Stiffener Strips in the bottom of the 6' Planks. Attach the 6' Recycled Planks to the 940 Legs using specified hardware. Attach the 49-1/2" Brace to the 940 Legs as shown using specified hardware.

ITEM NO.	PartNo	DESCRIPTION	QTY
1	G-W942P	942P Wood Leg	2
2	BRN72-2x10-B, CDR72-2x10-B, GRN72-2x10-B, or GRY72-2x10-B	2 x 10 Brown Recycled Bench Plank (6'), 2 x 10 Cedar Recycled Bench Plank (6'), 2 x 10 Green Recycled Bench Plank (6'), or 2 x 10 Gray Recycled Bench Plank (6')	1
3	33-06-0006	5/16" x 2 1/4" Carriage Bolt (Zinc)	4
4	33-06-0008	3/8" x 3" Carriage Bolt (Zinc)	2
5	33-02-0001	5/16" Zinc Plated Washer	4
6	33-02-0002	3/8" Zinc Plated Washer	2
7	33-01-0001	5/16" Hex Nut (Zinc)	4
8	33-01-0002	3/8" Hex Nut (Zinc)	2
9	01-01-0108	49 1/2" Brace	1
10	P-01-04-0168	recycled 6' plank stiffener strip	2

OVERALL DIMENSIONS

